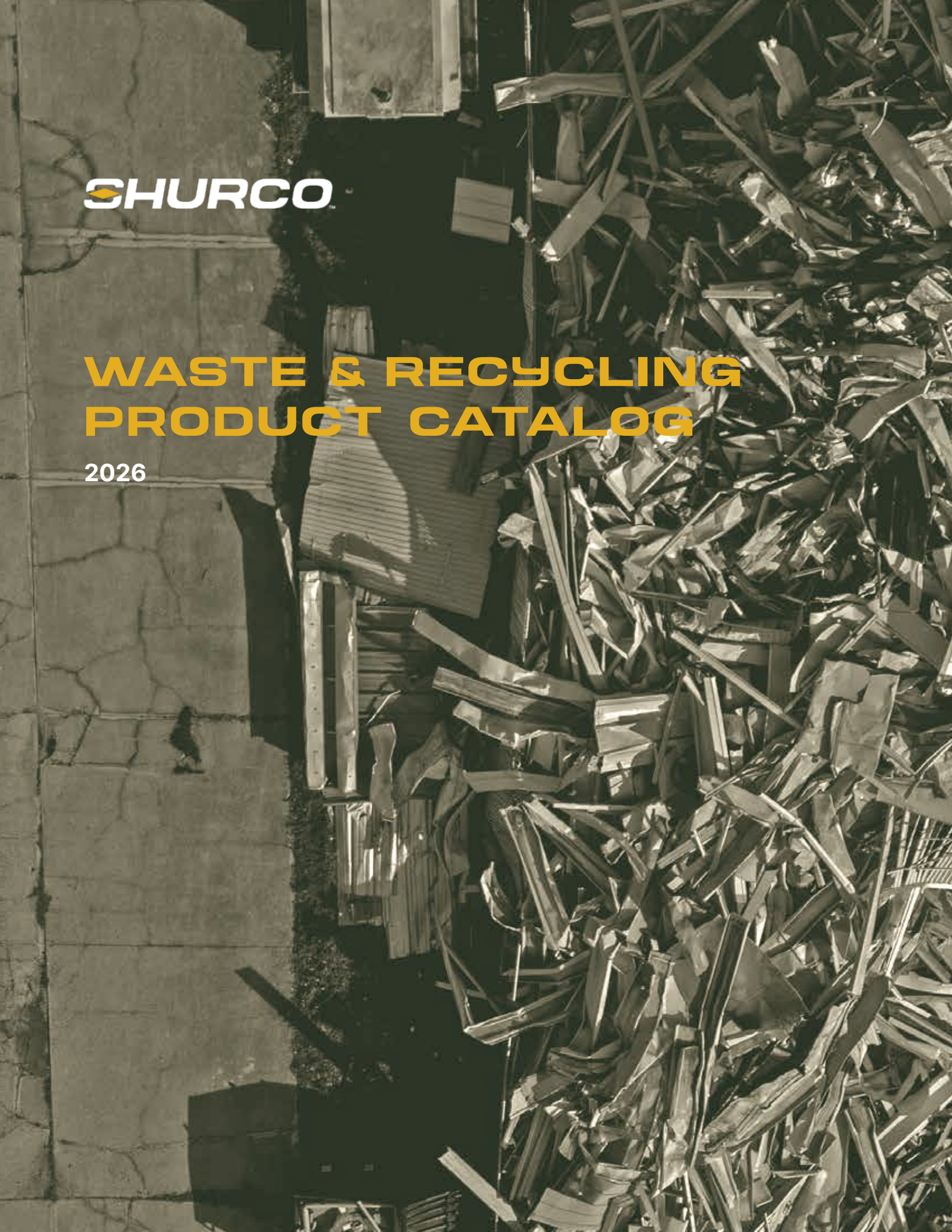

SHURCO™

WASTE & RECYCLING PRODUCT CATALOG

2026

TABLE OF CONTENTS

WASTE & RECYCLING SYSTEMS

ROLL-OFF

SWAT® 6
Quick-Flip4™ 8
Hy-Tower™ 10
Additional Roll-Off Replacement Tarps 11

SIDE FLIP

Sidewinder™ II | Sidewinder™ 350 12
Double-Flip™ 13

SIDE-TO-SIDE

Shur-Lok® 14
Replacement Tarps 16
Belt 'N Ratchet 17
Replacement Tarps 19
4500 Series HD 20
APEX™ 22

TARPS & ACCESSORIES

ShurLink™ 25
LiteALL™ 26
Service Truck Power Kits 28
Control Modules 30
Motors 31
Tarp Repair Supplies | Fabric Materials 32

REPLACEMENT PARTS

Replacement Parts 34
Replacement Parts for Discontinued Systems 70

BOX DETAILS

End Dumps 73
Live-Bottoms 74
Belly Dumps & Open-Top Vans 75

ORDER FORMS

4500HD End Dumps & Live-Bottoms 76

PRODUCT COMPARISON CHARTS

MAX COVERAGE CAPABILITY

ROLL-OFF	
SWAT®	12' – 22'
Quick-Flip4™	Up to 36'
Hy-Tower™	Up to 22'
SIDE FLIP	
Sidewinder™ II, Sidewinder™ 350	Up to 53' x 102"
Double-Flip™	Up to 53' x 102"
SIDE-TO-SIDE	
Shur-Lok®	Up to 53' x 102"
Belt 'N Ratchet	Up to 53' x 102"
4500 Series HD	Up to 53' x 102"
APEX™	Up to 53' x 102"

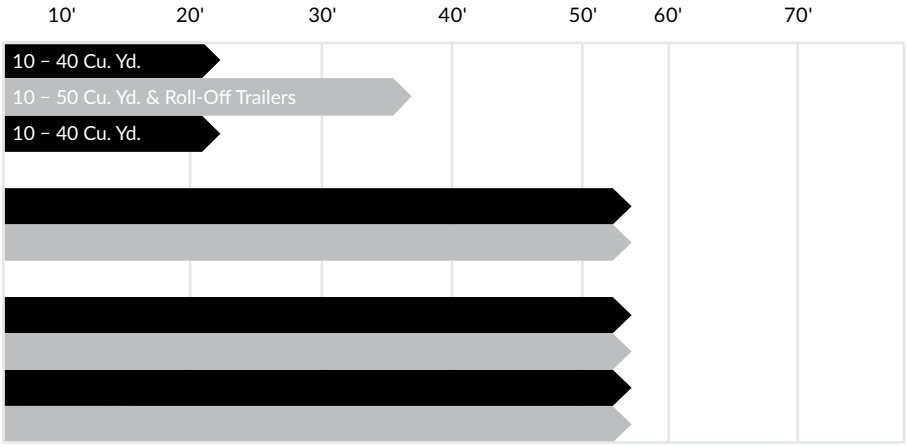

WHAT ARE YOU HAULING?

	CONSTRUCTION & DEMOLITION	RECYCLING	REFUSE	FLY ASH	WOOD CHIPS
ROLL-OFF					
SWAT®	✓	✓	✓		
Quick-Flip4™	✓	✓	✓		
Hy-Tower™	✓	✓	✓		✓
SIDE FLIP					
Sidewinder™ II | Sidewinder™ 350	✓	✓	✓		
Double-Flip™	✓	✓	✓		
SIDE-TO-SIDE					
Shur-Lok®	✓	✓	✓		✓
Belt 'N Ratchet	✓	✓	✓	✓	✓
4500 Series HD	✓	✓	✓	✓	✓
APEX™	✓	✓	✓	✓	✓

CONFIGURING YOUR SYSTEMS

Shurco systems can be ordered using two different methods, by a part number, which allows the customer to order standard features only. The other, is by configuring the options desired. For that type of kit order you will find your price for the standard features listed, then select your desired options.

In this example the alphabetical letter **B** designates the feature, the bullet • designates the standard feature in the kit, the numerical value **2** shows a different available option for that feature. This will allow the customer to communicate their desired feature, by requesting feature B2 [Easy-Off Tarp Stops]. The price can then be found by taking "Deduct/Ea." $ Amount and multiplying that by the number of tarp stops found in the **HARDWARE QTY** chart for your size kit, then deducting that $ amount from the standard price.

EXAMPLE

COMPLETE KIT

PRICE
38'
40'
42'
44'
46'
48'
50'
52'
54'

↑ Standard Price

STANDARD FEATURES AND OPTIONS

A	LATCHPLATES	
•	Aluminum Latchplate	Standard
B	TARP STOPS	
•	Easy-Off Belt Flex™ Tarp Stop	Standard
1	Flexible Easy-Off Tarp Stop	N/C
2	**Easy-Off Tarp Stop**	**Deduct/Ea.**
3	6" Offset Belt Flex™ Tarp Stop	Add/Ea.
4	6" Offset Flexible Easy-Off Tarp Stop	Add/Ea.
5	6" Offset Easy-Off Tarp Stop	Add/Ea.
B	END CAPS	
•	Aluminum (Flat) End Caps	Standard
1	Poorboy Rear Tapered Flap	N/C
2	No Rear Cap (Flat)	Deduct
3	Aluminum Universal (Flat) Front Cap	Add
4	Poorboy Front Tapered Flap	N/C

HARDWARE QTY

SIZE	TARP STOPS
35' to 38'	6
39' to 43'	6
44' to 46'	7
47' to 50'	7
51' to 54'	8

WASTE & RECYCLING SYSTEMS

SWAT

GEAR AND RACK
Precision cut and built gear and rack.

HARD-PIPE CYLINDERS
The hard-pipe cylinders with nitride coated rods reduce chances of hose damage.

TARP TUBE
One person quick release tarp tube, with standard tube spline for easy tarp replacement.

SPRING ROLLER BAR
Industry leading extreme use spring roller bar.

MIGHTY MESH
The strongest truck tarp material on the market today.

LITEALL WORK LIGHT
Includes mounting brackets and wiring protection tube are pre-installed.

SYSTEM BENEFITS
- SWAT Parts Directly Replace Leading Competitor Parts
- Secure Flanged/Bolted Pivot Gear Pins Prevent Loosening Gear Over Time
- 3/16" A500B Steel Arms, Gussets and Brackets Engineered with Exceptional Durability to withstand Demands of the Industry
- Low-Profile Arms Avoid Damage
- Covers a Wider Range of Truck Container Sizes than Competitor Systems
- SWAT SA (Straight Arm) Covers 12'–16' OR 14'–18' Containers (Pivot Location Determines)
- SWAT SA (Bent Arm) Covers 18'–21' Containers
- SWAT (Bent Arm) Covers 20'–22' Containers
- Self-Contained Remote Control Operation
- Includes Self-Contained Remote

SELF-CONTAINED REMOTE
SWAT is available with a self-contained remote, making it the only steel arm pivot tarp system in the industry with remote options. The remote allow drivers to take safer positions with better visibility during tarp operation. Additionally, the self-contained design isolates the tarp's hydraulics, protecting the tarp system.

Table of Contents

Replacement Parts

MORE PRODUCT INFORMATION
Want to learn more? Simply scan to explore further details about SWAT® features.

SYSTEM WARRANTY
Scan here to learn about the SWAT system warranty.

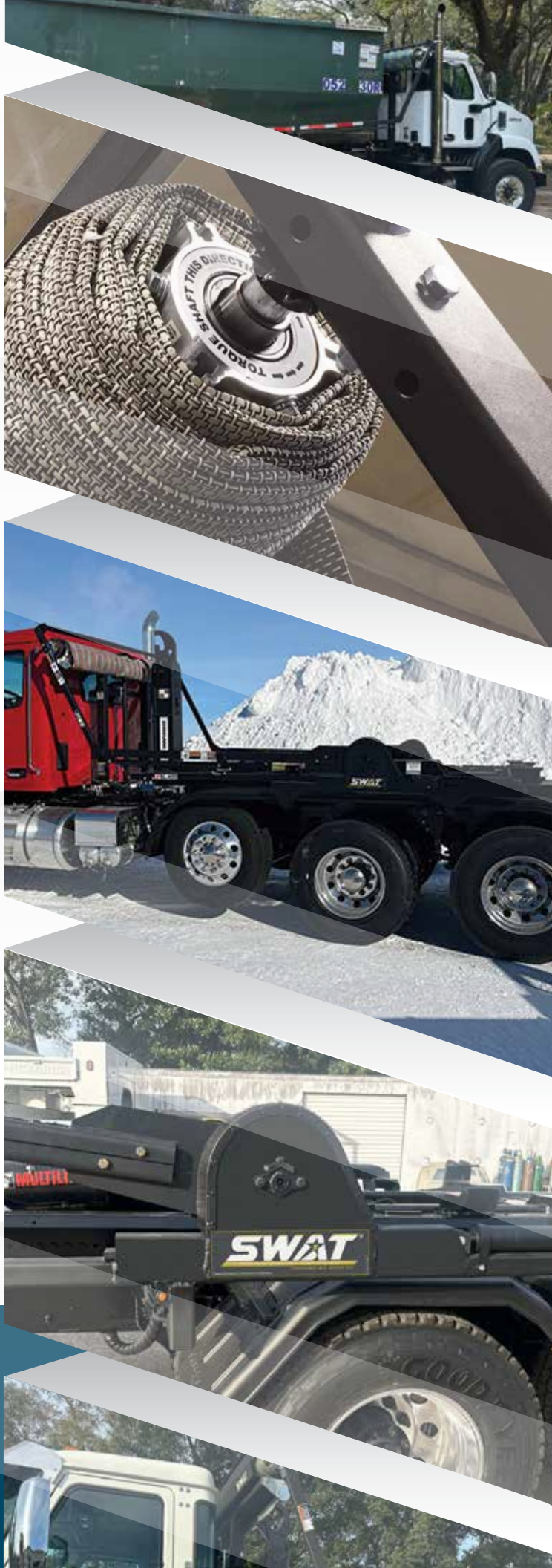

CABLE HOIST | *Tarp Included*

CONTAINER LENGTH	MIGHTY MESH® TARP	W/O WET KIT	WET KIT	SELF CONTAINED W/REMOTE
12' - 18'	8' x 28'	1811710	1811712	1811714
	9'8" x 28'	1811711	1811713	1811715
18' - 21'	8' x 28'	1810407	1810409	1810411
	9'8" x 28'	1810408	1810410	1810412
20' - 22'	8' x 28'	1809616	1809618	1809621
	9'8" x 28'	1809617	1809619	1809622

HOOK LIFT | *Tarp Included*

CONTAINER LENGTH	MIGHTY MESH® TARP	W/O WET KIT	WET KIT	SELF CONTAINED W/REMOTE	WET KIT HIGH PRESSURE
12' - 18'	8' x 28'	1811716	1811718	1811720	1811726
	9'8" x 28'	1811717	1811719	1811721	1811727
18' - 21'	8' x 28'	1810413	1810415	1810417	1810423
	9'8" x 28'	1810414	1810416	1810418	1810424
20' - 22'	8' x 28'	1809678	1809680	1809682	1809772
	9'8" x 28'	1809679	1809681	1809683	1809773

TARPS

FABRIC	COLOR	SIZE	P/N
Mighty Mesh®	Mult-Color	8' x 28' - 22' Container	1801686
Mighty Mesh®	Mult-Color	8' x 28' - 22' Container w/Hook Lift	1809674
Mighty Mesh®	Mult-Color	9'8" x 28' w/Flaps - 22' Container	1801640
Mighty Mesh®	Mult-Color	9'8" x 28' w/Flaps - 22' Container w/Hook Lift	1809675

P/N 1801686 P/N 1809674 P/N 1801640 P/N 1809675

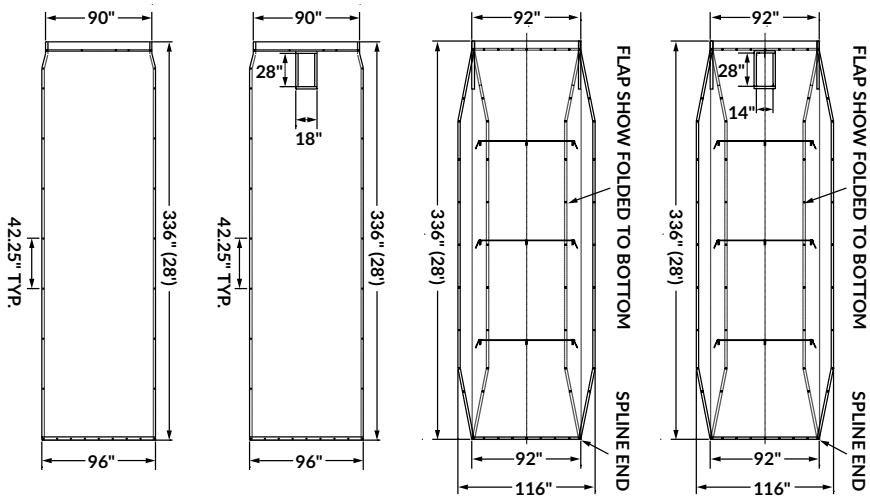

MIGHTY MESH® FITS ALL TARPS

- 1801686 - 8' x 28'
- 1809674 - 8' x 28' w/Hook Lift Cutout

MIGHTY MESH® TARPS W/FLAPS

- 1801640 - 9'8" x 28'
- 1809675 - 9'8" x 28' w/Hook Lift Cutout

FEATURES

- Replacement Tarp Fits all Brands of Hydraulics Roll-Off Tarper
- Tapered Pocket End for Ease of Installation and Enhanced Appearance
- Flap Tarps - Side Flaps on Tarp Extend Lateral Coverage
- Flap Tarps - Pre-Installed Bungee Cord Retracts Flaps for a Smooth Roll Up

LOWER ARM "*HARD PIPE*" 36" CYLINDER

P/N 1808892

REPLACES COMPETITOR P/N HR4752

RACK/PIVOT 16" CYLINDER

P/N 1808890

REPLACES COMPETITOR P/N HR4719

UPPER "*HOCKEY STICK*" ARM

P/N 1808874

REPLACES COMPETITOR P/N HR4751

LOWER "*CYLINDER*" ARM

P/N 1808879

REPLACES COMPETITOR P/N HR4750

STABILIZER BAR

P/N 1808873

REPLACES COMPETITOR P/N HR4753

ROLLER BAR

P/N 1803805

REPLACES COMPETITOR P/N H7002C

QUICK-FLIP4

GAME-CHANGING UPGRADES

- Wireless Remote Operation
- Safety Work Lights Included (Standard) - Wireless Operation
- Coiled Power Cord for Cleaner Appearance
- Toggle Switch (Marine Grade)
- Tarp Tower Ships Preassembled from Factory

ADDITIONAL FEATURES & BENEFITS

- Unbreakable Aluminum Arms
- 90° Cast Elbows
- 40° Bend Pivot Arm Standard in Multi-Axle Model Kits
- 12VDC Self-Contained Electric/Hydraulic Power Unit - Standard
- Telescoping Gantry - Standard
- Durabuilt™ Electric Motor (900 Watt)

**Additional options may be available for all applications.*

Table of Contents

Replacement Parts

MORE PRODUCT INFORMATION
Want to learn more? Simply scan to explore further details about Quick-Flip4™ features.

SYSTEM WARRANTY
Scan here to learn about the QuickFlip4 system warranty.

FITS BOXES AND TRAILERS - UP TO 36' | *Tarp Sold Separately*

KIT NAME	MODEL	MODE OF OPERATION	P/N
Quick-Flip4™	Single Axle - Bridge Mounting	Remote Operated	1811480
Quick-Flip4™	Single Axle - Straight Mounting	Remote Operated	1811881
Quick-Flip4™	Multi Axle	Remote Operated	1811485
Quick-Flip4™	Roll-Off Trailer	Remote Operated	1811490

TARPS

FABRIC	COLOR	SIZE	P/N
SINGLE AXLE			
Mighty Mesh®	Mult-Color	8' x 14' - 10' Container w/Hook Lift	1811742
Mighty Mesh®	Mult-Color	8' x 16' - 12' Container w/Hook Lift	1811741
Mighty Mesh®	Mult-Color	8' x 18' - 14' Container w/Hook Lift	1811740
Mighty Mesh®	Mult-Color	8' x 20' - 16' Container w/Hook Lift	1811739
Mighty Mesh®	Mult-Color	8' x 28' - 22' Container	1801686
Mighty Mesh®	Mult-Color	8' x 28' - 22' Container w/Hook Lift	1809674
MULTI AXLE			
Mighty Mesh®	Mult-Color	8' x 28' - 22' Container	1801686
Mighty Mesh®	Mult-Color	8' x 28' - 22' Container w/Hook Lift	1809674
TRAILER			
Mighty Mesh®	Mult-Color	8' x 28' - 22' Container	1801686
Mighty Mesh®	Mult-Color	8' x 34' - 30' Container	1808734
Mighty Mesh®	Mult-Color	8' x 38' - 34' Container	1808735
Mighty Mesh®	Mult-Color	8' x 42' - 38' Container	1808736

NOTE: If tarp cutout is needed, please call 1-800-327-8287

OPTIONS AND FEATURES

ELECTRIC OPERATION

MOTOR REVERSING SOLENOID
P/N 1703845

SOLENOID COVER
P/N 1703896

HY-TOWER

KEY FEATURES

- 12V Self-Contained Electric/Hydraulic Power Unit
- Aluminum Leg Mast/15' Lift
  - Standard on P/N 1801019
- Steel Leg Mast/12' Lift
  - Standard on P/N 1803900
- Nylon-Coated Cable Assembly
- Spring-Loaded Extruded Aluminum Roller Bar

The Hy-Tower™ semi-automatic roll-off tarp system covers containers from 15 to 40 cubic yards, with a gantry that raises either 12'or 15' above the truck frame and then tucks compactly behind the cab during transport. The lightweight, easy-to-handle, extra-wide 100' tarp allows you to quickly contain heaping loads from the safety of the ground. You just raise the tower, deploy and secure the tarp, lower the tower and hit the road!

Hydraulics for the system are self-contained and require minimal maintenance. Care is especially easy with no pivot arms to bend or break. The Hy Tower™ comes preassembled for easy installation and weighs only 450 pounds installed! Durable and built to last, the springs are backed by a lifetime warranty. Kits contain hardware only. The knitted mesh tarps, with or without flaps, will fit any of the Hy-Tower™ kits.

Table of Contents

Replacement Parts

MORE PRODUCT INFORMATION

Want to learn more? Simply scan to explore further details about Hy-Tower features.

FITS BOXES AND TRAILERS - UP TO 40 CU. YD. | *Tarp Sold Separately*

KIT NAME	GANTRY	NO. OF LEGS	MODE OF OPERATION	P/N
Hy-Tower™ SL	Aluminum	1 - 15'	Toggle Switch	1801019
Hy-Tower™ DL	Steel	2 - 12'	Toggle Switch	1803900

TARPS

FABRIC	COLOR	SIZE	P/N
Knitted Mesh	Black	6' x 22' - 18' Containers	1803751
Knitted Mesh	Black	8' x 28' w/Flaps - 22' Containers	1801020
Knitted Mesh	Black	8'4" x 28' - 22' Containers	1801026

OPTIONS AND FEATURES

TARP ROLLER

ROLLER BAR
P/N 1810381

ADDITIONAL REPLACEMENT TARPS

COMPETITOR SYSTEMS

FABRIC	COLOR	SIZE	P/N
Mighty Mesh®	Multi-Color	9'1" x 28' w/Flaps	1801684
Mighty Mesh®	Multi-Color	9' x 28' w/Flaps	1801690
Mighty Mesh®	Multi-Color	9'6" x 28' w/Flaps	1800603
Mighty Mesh®	Multi-Color	8'4" x 28'	1801985
PVC MESH	Multi-Color	7'9" x 28' w/Reinforcements	1801032

ROLL-OFF TARPS | *Hand Tarps*

FABRIC	COLOR	SIZE	P/N
PVC Mesh	Multi-Color	12' x 18'	1801458
PVC Mesh	Multi-Color	12' x 24'	1801528
PVC Mesh	Multi-Color	12' x 26'	1801529
Knitted Mesh	Black	12' x 18'	1801461
Knitted Mesh	Black	12' x 24'	1801001
Knitted Mesh	Black	12' x 26'	1801002
18-oz Vinyl	Black	12' x 24'	1801375
18-oz Vinyl	Black	12' x 26'	1801376

ROLL-OFF TARPS | *Compactor Diapers*

FABRIC	COLOR	SIZE	P/N
PVC Mesh	Multi-Color	5' x 7'	1800024
PVC Mesh	Multi-Color	6' x 8'	1800025

SIDEWINDER II
SIDEWINDER 350

KEY FEATURES

- Universal Components (Fit Either Side of Trailer)
- Right Side/Left Side Mounting Hinges
  - (Mount to Either Side)
- Electric/Hydraulic Power Unit (Self Contained)
- Hydraulic (Wet) Valve Kit - Standard on Wet Kits
- Preassembled Head Assemblies
- Forward/Rear/Over-Center Arm Brace Locations
- Steel Frame - Standard on Sidewinder™ II Kits
- Aluminum Frame - Standard on Sidewinder™ 350 Kits

The Sidewinder™ II has modular and interchangeable components that fit either side of the trailer. (Although parts and hinge-mount hardware are universal, order drive side or curb side for proper head mount.) Your choice of electric or hydraulic. The system is fully automatic, covering and uncovering in under 20 seconds.

The Sidewinder's head assembly comes preassembled. Heavy-duty steel hinges are built to last, and the marine grade toggle stands up to heavy usage. Components bolt-together, no welding is required. Kits contain hardware only.

**Additional options may be available for all applications.*

ROLL-OFF TRUCKS/TRAILERS

FITS TRAILERS - UP TO 53' x 102" | *Tarp Sold Separately*

KIT NAME	MATERIALS	HINGE	ARMS	P/N
Sidewinder™ II	Steel	Left	N/A	1800297
Sidewinder™ II	Steel	Right	N/A	1801908
Sidewinder™ II	Steel	Left	N/A	1801914
Sidewinder™ II	Steel	Right	N/A	1801910
Sidewinder™ 350	Aluminum	Left	Unassembled	1800778
Sidewinder™ 350	Aluminum	Right	Unassembled	1801969

KIT NAME	FEATURES	MODE OF OPERATION	P/N
Sidewinder™ II	Elec./Hydraulic	Toggle Switch	1800297
Sidewinder™ II	Elec./Hydraulic	Toggle Switch	1801908
Sidewinder™ II	Wet Kit	N/A	1801914
Sidewinder™ II	Wet Kit	N/A	1801910
Sidewinder™ 350	Elec./Hydraulic	Toggle Switch	1800778
Sidewinder™ 350	Elec./Hydraulic	Toggle Switch	1801969

NOTE: Although components and hinge mount hardware are universal, head mount is available in both left-side and right-side styles.

TARPS

FABRIC	COLOR	SIZE	P/N
Poly Mesh	Orange	9'6" x 55'	1800604
Grid	Black	10' x 55'	*1809712

*Can NOT be used with Sidewinder™ 350.

Table of Contents

Replacement Parts

MORE PRODUCT INFORMATION

Want to learn more? Simply scan to explore further details about Sidewinder II and Sidewinder 350 features.

DOUBLE-FLIP

KEY FEATURES

- HD Steel Pivot Arms
- Hydraulic (Wet) Valve Kit
- Lower Profile Than Single Lid System

The Double-Flip™ opens and closes in under 10 seconds! It's simple to operate, easy to maintain and extremely affordable. Designed to cover open-top transfer trailers up to 102" wide and 53' long, with a hydraulic power gantry and tarp roller that operates off the trailer's hydraulics. (Optional self-contained power kit available for tipper trailers.)

Lids rest flush on trailer sides when opened, allowing loading in narrow spaces. Lids overlap when closed to properly seal the load and eliminate blowout. 2-spool manual control valve, mounted on the trailer's front wall, allows independent operation of each lid. The Double-Flip's 3-arm design provides the proper combination of strength and flexibility to cover and contain loads.

The Double-Flip™ system uses the same frame and hinges as our Sidewinder™. Preassembled head assembly mounts to any style front trailer wall. Its heavy-duty linkage and self-lubricating hinges ensure durability, reduces air flow under the tarp, protects the head assembly from debris and the operator from moving parts. The kit includes valves, hoses, tarp, frame and other components; some additional hardware may be needed. Approximate shipping weight: 1,200 lbs.

WASTE/RECYCLING TRAILERS

FITS TRAILERS - UP TO 53' X 102" | *Tarps Sold Separately*

KIT NAME	PIVOT ARM	FEATURES	P/N
Double-Flip™	Steel	Wet Kit	1800161

TARPS

FABRIC	COLOR	SIZE	P/N
PVC Mesh	Black	53-1/2" x 53'	*1800236
18-oz. Vinyl	Black	55" x 53'	*1800237

*Need two tarps per system.

Table of Contents

Replacement Parts

MORE PRODUCT INFORMATION

Want to learn more? Simply scan to explore further details about Double-Flip features.

SHUR-LOK

SHUR-FLEX™ CRANK ARMS

Pivots on a knuckle and folds for storage.
Stores on side to accommodate rear doors.

DURABOW™

Molded resin bow supports tarp but has enough give to be left on during loading.

TURNING POINT™ BOW SYSTEM

Angled bracket allows bow to move freely.
Swings up and over loads without binding.

FLEXIBLE EASY-OFF TARP STOP

Bends even in subzero cold. Impact and abrasion resistant with embedded safety plates.

SHUR-RETURN™

Non-stretch solid braid rope with heavy-duty steel tension spring. Works well in cold weather.

Shur-Lok® provides you with watertight dependability for increased productivity and less downtime. The Shur-Flex™ crank offers convenient flexibility. It folds at the knuckle and secures with offset or pinless offset retainers. No more pin-and-cable hassles.

The front fabric cap makes it easier to come over the top of the doghouse. Double bows secure into a double bow bracket, exactly the right spacing for tightening down the front of the tarp. The front stretch roll return guides the roll tarp over the end cap. Reinforced stitching along the radius corner of the fabric cap helps the tarp withstand the stresses of highway speed.

**Electric Shur-Lok® options are also available for most trailer types.*

Table of Contents

Replacement Parts

MORE PRODUCT INFORMATION
Want to learn more? Simply scan to explore further details about Shur-Lok features.

COMPLETE KITS | INCLUDES 2" ROLL TUBE | *Tarp Included*

BOX LENGTH	SUPER-DUTY 18-OZ	MESH
38'		
40'		
42'		
44'		
46'		
48'		
50'		
52'		
54'		

COMPLETE KITS | INCLUDES 3" ROLL TUBE*

Tarp Included

BOX LENGTH	SUPER-DUTY 18-OZ	MESH
38'		
40'		
42'		
44'		
46'		
48'		
50'		
52'		
54'		

*Kits w/ 3" roll tube for electric kits only.

HARDWARE QTY

SIZE	TARP STOPS	U-CLAMPS
35' to 38'	6	14
39' to 43'	6	14
44' to 46'	7	16
47' to 50'	7	16
51' to 54'	8	18

STANDARD FEATURES AND OPTIONS

A	**LATCHPLATES**	
•	Aluminum Latchplate	Standard
B	**TARP STOPS**	
•	6" Offset Belt Flex™ Tarp Stop	Standard
1	6" Offset Flexible Easy-Off Tarp Stop	Deduct/Ea.
2	6" Offset Easy-Off Tarp Stop	Deduct/Ea.
3	Easy-Off Belt Flex™ Tarp Stop	Deduct/Ea.
4	Flexible Easy-Off Tarp Stop	Deduct/Ea.
5	Easy-Off Tarp Stop	Deduct/Ea.
C	**BOWS/BRACKETS**	
•	No Bows	Standard
D	**END CAPS**	
•	Aluminum (Flat) End Caps	Standard
1	Poorboy Rear Tapered Flap	N/C
2	No Rear Cap (Flat)	Deduct
3	Aluminum Universal (Flat) Front Cap	Add
4	Poorboy Front Tapered Flap	N/C
5	Poorboy Front Radius/Diagonal Fitted Flap	Add
6	No (Flat) Front Cap	Deduct
E	**RIDGE SUPPORTS**	
•	No Ridge Strap	Standard
F	**ROLL RETURN**	
•	Shur-Return™	Standard
1	Stretch Cord Return	Deduct
2	Front Cable Return	Add
3	Heavy-Duty Arm Return	Add
G	**CRANK ARMS**	
•	96" Shur-Flex™ Crank Arm	Standard
1	80" Shur-Flex™ Crank Arm	N/C
2	Standard Crank Arm w/96" Extension	Deduct
3	Long Crank Arm w/80" Extension	Deduct
H	**RETAINERS**	
•	Offset Retainers (4 with Shur-Flex™)	Standard
•	Offset Retainers (2 with Standard Crank)	Standard
1	Offset Pinless Retainer (4)	Add/Set
2	Offset Pinless Retainer (2)	Add/Set
J	**TARP OPTIONS**	
•	18-Oz Vinyl Tarp - Choice of Color	*Standard
•	Mesh Tarp	**Add
1	Multicolored Fabric (Per Added Color)	Add
2	Mesh Insert 72" x 26'	***Add/Ea.
3	Tarp Reinforcements	Add/Ft.
K	**OTHER OPTIONS**	
1	Rear Cable Return - Use w/Metal Caps	Add
2	Standard Tarp Repair Kit	Add
3	Professional Tarp Repair Kit	Add
4	Molded Roll Tube Deflectors (2)	Add/Set

*Available Colors: black, red, white, royal blue, green, gray, maroon, yellow and grape. Grape and yellow N/A in 22-Oz. For tan CALL.

**Available Colors: black only.

***Inserts smaller than standard size will be priced the same. If larger than standard, a special quote will be needed.

TARP PRICING DIRECTIONS

Pricing given is for black fabric ONLY; add tarp options for a final price. For all other colors, add tarp price and tarp options, find the subtotal and then add a 15% upcharge. [TARP + OPTIONS = SUBTOTAL x 15% = UPCHARGE] Additional available colors: black, red, white, royal blue, green, gray, maroon, yellow and grape. Grape and Yellow N/A in 22-Oz.. For tan CALL.

Replacement tarp pricing for 2" & 3" roll tubes are the same price. The roll tube pocket for a 2" roll tube is 5" and the pocket for a 3" roll tube is 7".

SUPER DUTY/MESH: Finished tarp width is opening width PLUS 27".

	(BOX WIDTH) FINISHED TARP WIDTH					
	(96") / 123"	(102") / 129"	(96") / 123"	(102") / 129"	(96") / 123"	(102") / 129"
	SUPER DUTY - 18-OZ		SUPER DUTY - 22-OZ		MESH	
BOX LENGTH	37'					
	38'					
	39'					
	40'					
	41'					
	42'					
	43'					
	44'					
	45'					
	46'					
	47'					
	48'					
	49'					
	50'					
	51'					
	52'					
	53'					
	54'					

18-OZ TARP OPTIONS	
Multicolored Fabric *	Add
Tarp Reinforcements	Add/Ft.
Poorboy Rear Tapered Flap	Add
Poorboy Front Tapered Flap	Add
Poorboy Diag./Radius fitted Flap	Add
Additional 6" in Width	Add/Ft.

*Additional cost per added color.

22-OZ/MESH TARP OPTIONS	
Multicolored Fabric *	Add
Tarp Reinforcements	Add/Ft.
Poorboy Rear Tapered Flap	Add
Poorboy Front Tapered Flap	Add
Poorboy Diag./Radius fitted Flap	Add
Additional 6" in Width	Add/Ft.

*Additional cost per added color.

U-CLAMPS	
2" ROLL TUBE	
1115966	U-Clamp Kit 2" - (3)
1118643	U-Clamp Kit 2" - (8)
1118644	U-Clamp Kit 2" - (10)
1118663	U-Clamp Kit 2" - (14)
3" ROLL TUBE	
1126790	U-Clamp Kit 3" - (3)
1126791	U-Clamp Kit 3" - (8)
1126792	U-Clamp Kit 3" - (10)
1126793	U-Clamp Kit 3" - (14)

NOTE: Includes self-tapping screws.

SIZE	U-CLAMPS
10' to 18'	8
19' to 34'	10
35' to 43'	14
44' to 50'	16
51' to 54'	18

BELT ‘N RATCHET

HOLD-DOWNS

The 2" hold-downs secure the tarp tube for uniform tension across the tarp and make tension adjustments quick an easy. These can be ordered as strap tie-downs or as ratchets with optional quick-release straps.

3" OFFSET EASY-OFF TARP STOP

Designed for maximum loading space. The self-cleaning design prevents buildup around the fixed tube. Permits fast, easy tarp removal with minimum tools.

6" OFFSET FLEXIBLE EASY-OFF TARP STOP

Bends even in subzero cold. Impact and abrasion resistant with embedded safety plates for added durability. Designed for maximum loading space.

VINYL TARP

Made of a solid vinyl-coated fabric for a more durable and longer tarp life. All seams are heat-welded to provide an added moisture barrier. Built in UV inhibitor resist fading. Available in 18 and 22-oz. material.

MESH TARP

Made of a durable lightweight fabric this options offers good air circulation in addition to secure containment. Seams are heat-welded for added durability.

KEY FEATURES

- Easy-Off Aluminum Tarp Stop
- Solid Vinyl Tarp with Flaps to Fully Seal Container
- Bows Support to Shed Water when Tarp is Closed
- Fits Container Lengths from 12' to 26'
- Removable Crank with Box Mounted Storage Retainers

Table of Contents

Replacement Parts

MORE PRODUCT INFORMATION

Want to learn more? Simply scan to explore further details about Premium Belt ‘N Ratchet features.

FITS BOXES AND TRAILERS - UP TO 26' | *Tarp Included*

KIT NAME	LENGTH	BELTS	FLAPS	TARP MATERIAL	P/N
Belt 'N Ratchet Container Kit	12'	3	Front & Rear	18-oz Vinyl	1127027
Belt 'N Ratchet Container Kit	14'	3	Front & Rear	18-oz Vinyl	1127028
Belt 'N Ratchet Container Kit	16'	3	Front & Rear	18-oz Vinyl	1127029
Belt 'N Ratchet Container Kit	18'	3	Front & Rear	18-oz Vinyl	1127030
Belt 'N Ratchet Container Kit	20'	3	Front & Rear	18-oz Vinyl	1127031
Belt 'N Ratchet Container Kit	22'	3	Front & Rear	18-oz Vinyl	1127032
Belt 'N Ratchet Container Kit	24'	3	Front & Rear	18-oz Vinyl	1127033
Belt 'N Ratchet Container Kit	26'	4	Front & Rear	18-oz Vinyl	1127034

Includes: 5' Belt w/2" Ratchet Hold Downs, Easy-Off Tarp Stops, Galvanized (LR) Bows/Brackets, NO End Caps, NO Ridge Supports, NO Return, Standard Square Key Crank Arm, Offset Standard Retainer (2), 2" Roll Tube, 18-oz Vinyl Tarp.

FITS BOXES AND TRAILERS - UP TO 53' | *Tarp Included*

KIT NAME	LENGTH	WIDTH	BELTS	FLAPS	TARP MATERIAL	P/N
Belt 'N Ratchet Transfer Kit	45'	96"	5	Front & Rear	Gator Mesh	1127035
Belt 'N Ratchet Transfer Kit	48'	96"	5	Front & Rear	Gator Mesh	1127036
Belt 'N Ratchet Transfer Kit	53'	96"	5	Front & Rear	Gator Mesh	1127037
Belt 'N Ratchet Transfer Kit	45'	102"	5	Front & Rear	Gator Mesh	1127038
Belt 'N Ratchet Transfer Kit	48'	102"	5	Front & Rear	Gator Mesh	1127039
Belt 'N Ratchet Transfer Kit	53'	102"	6	Front & Rear	Gator Mesh	1127040

Includes: 9' Belt w/2" Ratchet Hold Downs, Easy-Off Tarp Stops, NO End Caps, NO Ridge Supports, Rope Return, Crank Arm w/Extension & Square Key, Offset Standard Retainer (2), 2" Roll Tube, Gator Mesh Tarp.

COMPLETE KITS | INCLUDES 2" ROLL TUBE | *Tarp Included*

BOX LENGTH	18-OZ	MESH
38'		
40'		
42'		
44'		
46'		
48'		
50'		
52'		
54'		

COMPLETE KITS | INCLUDES 3" ROLL TUBE* | *Tarp Included*

BOX LENGTH	18-OZ	MESH
38'		
40'		
42'		
44'		
46'		
48'		
50'		
52'		
54'		

HARDWARE QTY

SIZE	TARP STOPS	U-CLAMPS	RATCHETS
35' to 38'	6	14	6
39' to 43'	6	14	6
44' to 46'	7	16	7
47' to 50'	7	16	7
51' to 54'	8	18	8

*Includes stretch cord return and wire lock pin.

**Available colors: black, red, white, royal blue, green, gray, maroon, yellow and grape. Grape and yellow NA in22-Oz. For tan CALL.

***Available in black only.

****Inserts smaller than standard size will be priced the same. If larger than standard, a special quote will be needed.

STANDARD FEATURES AND OPTIONS

A	**HOLD-DOWNS**	
•	9' Belt w/2" Ratchet Hold Down	Standard
1	Strap Hold-Down w/Hooks	Add/Ea.
2	Cable Hold-Down	Add/Ea.
B	**TARP STOPS**	
•	6" Offset Belt Flex™ Tarp Stop	Standard
1	6" Offset Flexible Easy-Off Tarp Stop	Deduct/Ea.
2	6" Offset Easy-Off Tarp Stop	Deduct/Ea.
3	Easy-Off Belt Flex™ Tarp Stop	Deduct/Ea.
4	Flexible Easy-Off Tarp Stop	Deduct/Ea.
5	Easy-Off Tarp Stop	Deduct/Ea.
C	**BOWS/BRACKETS**	
•	No Bows	Standard
D	**END CAPS**	
•	Aluminum (Flat) End Caps	Standard
1	Poorboy Rear Tapered Flap	N/C
2	No (Flat) Rear Cap	Deduct
3	Aluminum Universal (Flat) Front Cap	Add
4	Poorboy Front Tapered Flap	N/C
5	Poorboy Front Radius/Diagonal Fitted Flap	Add
6	No (Flat) Front Cap	Deduct
E	**RIDGE SUPPORTS**	
•	No Ridge Strap	Standard
F	**ROLL RETURN**	
•	Rope Return	Standard
G	**CRANK ARMS**	
•	Crank Arm w/Extension/Square Key	Standard
1	Standard Square Key Crank Arm	Deduct
2	Leave-On Crank Option	*Add
H	**RETAINERS**	
•	Offset Standard Retainer (2)	Standard
1	Offset Pinless Retainer (2)	Add/Set
J	**TARP OPTIONS**	
•	18-Oz Vinyl Tarp - Choice of Color	**Standard
•	Mesh Tarp	***Add
1	Multicolored Fabric (Per Added Color)	Add
2	Mesh Insert 72" x 26'	****Add/Ea.
3	Tarp Reinforcements	Add/Ft.
K	**OTHER OPTIONS**	
1	Rear Cable Return - Use w/Metal Caps	Add
2	Standard Tarp Repair Kit	Add
3	Professional Tarp Repair Kit	Add
4	Molded Roll Tube Deflectors (2)	Add/Set

ROLL-OFF CONTAINER TARPS

FABRIC	KIT SIZE	TARP SIZE	FABRIC	P/N
Belt 'N Ratchet Tarp	12'	14'3" x 115"	18-oz Vinyl	1901600
Belt 'N Ratchet Tarp	14'	16'3" x 115"	18-oz Vinyl	1901601
Belt 'N Ratchet Tarp	16'	18'3" x 115"	18-oz Vinyl	1901602
Belt 'N Ratchet Tarp	18'	20'3" x 115"	18-oz Vinyl	1901603
Belt 'N Ratchet Tarp	20'	22'3" x 115"	18-oz Vinyl	1901604
Belt 'N Ratchet Tarp	22'	24'3" x 115"	18-oz Vinyl	1901605
Belt 'N Ratchet Tarp	24'	26'3" x 115"	18-oz Vinyl	1901606
Belt 'N Ratchet Tarp	26'	28'3" x 115"	18-oz Vinyl	1901607

TRANSFER TRAILER TARPS

KIT NAME	KIT SIZE	TARP SIZE	FABRIC	P/N
Belt N' Ratchet Tarp	45' x 96"	45' x 117"	Gator Mesh	1902067
Belt N' Ratchet Tarp	48' x 96"	48' x 117"	Gator Mesh	1902068
Belt N' Ratchet Tarp	53' x 96"	53' x 117"	Gator Mesh	1902069
Belt N' Ratchet Tarp	45' x 102"	45' x 123"	Gator Mesh	1902064
Belt N' Ratchet Tarp	48' x 102"	48' x 123"	Gator Mesh	1902065
Belt N' Ratchet Tarp	53' x 102"	53' x 123"	Gator Mesh	1902066

	(BOX WIDTH) FINISHED TARP WIDTH					
	(96") / 112"	(102") / 118"	(96") / 112"	(102") / 118"	(96") / 112"	(102") / 118"
	18-OZ TARP		22-OZ TARP		MESH	
BOX LENGTH						
37'						
38'						
39'						
40'						
41'						
42'						
43'						
44'						
45'						
46'						
47'						
48'						
49'						
50'						
51'						
52'						
53'						
54'						

TARP PRICING DIRECTIONS

Pricing given is for black fabric ONLY; add tarp options for a final price. For all other colors, add tarp price and tarp options, find the subtotal and then add a 15% upcharge. [TARP + OPTIONS = SUBTOTAL x 15% = UPCHARGE] Additional available colors: black, red, white, royal blue, green, gray, maroon, yellow and grape. Grape and Yellow N/A in 22-Oz.. For tan CALL.

NOTE: Replacement tarp pricing for 2" & 3" roll tubes are the same price. The roll tube pocket for a 2" roll tube is 5" and the pocket for a 3" roll tube is 7".

18-OZ TARP OPTIONS	
Tarp Reinforcements	Add/Ft.
Poorboy Rear Tapered Flap	Add
Poorboy Front Tapered Flap	Add
Poorboy Diag./Radius Fitted Flap	Add
Additional 6" in Width	Add/Ft.

MESH/22-OZ TARP OPTIONS	
Tarp Reinforcements	Add/Ft.
Poorboy Rear Tapered Flap	Add
Poorboy Front Tapered Flap	Add
Poorboy Diag./Radius fitted Flap	Add
Additional 6" in Width	Add/Ft.

U-CLAMPS	
2" ROLL TUBE	
1115966	U-Clamp Kit 2" - (3)
1118643	U-Clamp Kit 2" - (8)
1118644	U-Clamp Kit 2" - (10)
1118663	U-Clamp Kit 2" - (14)
3" ROLL TUBE	
1126790	U-Clamp Kit 3" - (3)
1126791	U-Clamp Kit 3" - (8)
1126792	U-Clamp Kit 3" - (10)
1126793	U-Clamp Kit 3" - (14)

SIZE	U-CLAMPS
35' to 43'	14
44' to 50'	16
51' to 54'	18

4500 SERIES HD

KEY FEATURES

- Spiral Spring Returns
- HD Front/Rear Alum. Torsion Arms with Flex-Elbow and Boot
- HD Mounting Bracket
- Dual-Pivot Motor Mount
- Custom Motor Shroud
- Sealed Control Box
- SMARTwire™ Sealed Harness
- ShurLink PRO™ and ShurLink EZR™ Remote System Capabilities, See Accessories Section in Catalog for Details

The 4500 Series HD features a powerful USA-made motor with all-metal gearbox and an incredibly reliable magnetic brake. Heavy-duty torsion arms are equipped with patented durable elbows for flexibility to move smoothly over loads.

Available for all trailer makes and models! The 4500 Series HD's motor produces optimal rather than increased torque (which can harm to your tarp system). No electrical energy is used to actuate the brake, so there are no electrical connections to misfire. A patented pivoting motor mount allows for any misalignment of the roll tube without stress to the system.

The heavy-duty arms are the strongest in the industry, backed with a lifetime warranty. They come preassembled with a super-sturdy mounting bracket (no backet plate needed in most installs). The roller bearing - style rear arm bracket has a low-friction design that won't wear out. Both arms are inset to prevent obstruction of clearance lights.

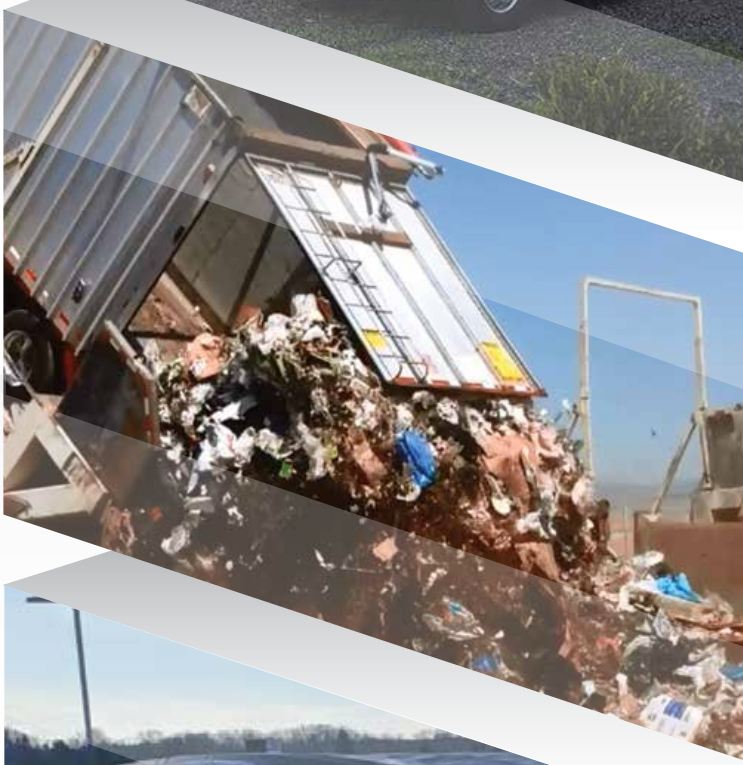

Table of Contents

Replacement Parts

MORE PRODUCT INFORMATION
Want to learn more? Simply scan to explore further details about 4500 Series HD features.

MODE OF OPERATION | ROCKER

KIT NAME	ARM TYPE	FRONT	REAR	REAR RETURN	ROLL TUBE
4500 Series HD	Double Arm	Vertical	Top Hinge	4-Spiral Torsion Springs	2"
4500 Series HD	Double Arm	Vertical	Side Hinge	4-Spiral Torsion Springs	2”
4500 Series HD	Single Arm	Vertical	N/A	Shur-Strap™	2”
4500 Series HD	Double Arm	Vertical	Top Hinge	4-Spiral Torsion Springs	3"
4500 Series HD	Double Arm	Vertical	Side Hinge	4-Spiral Torsion Springs	3"
4500 Series HD	Single Arm	Vertical	N/A	Shur-Strap™	3"

MODE OF OPERATION | SHURLINK EZR™

KIT NAME	ARM TYPE	FRONT	REAR	REAR RETURN	ROLL TUBE
4500 Series HD	Double Arm	Vertical	Top Hinge	4-Spiral Torsion Springs	2"
4500 Series HD	Double Arm	Vertical	Side Hinge	4-Spiral Torsion Springs	2”
4500 Series HD	Single Arm	Vertical	N/A	Shur-Strap™	2”
4500 Series HD	Double Arm	Vertical	Top Hinge	4-Spiral Torsion Springs	3"
4500 Series HD	Double Arm	Vertical	Side Hinge	4-Spiral Torsion Springs	3"
4500 Series HD	Single Arm	Vertical	N/A	Shur-Strap™	3"

MODE OF OPERATION | SHURLINK PRO™

KIT NAME	ARM TYPE	FRONT	REAR	REAR RETURN	ROLL TUBE
4500 Series HD	Double Arm	Vertical	Top Hinge	4-Spiral Torsion Springs	2"
4500 Series HD	Double Arm	Vertical	Side Hinge	4-Spiral Torsion Springs	2”
4500 Series HD	Single Arm	Vertical	N/A	Shur-Strap™	2”
4500 Series HD	Double Arm	Vertical	Top Hinge	4-Spiral Torsion Springs	3"
4500 Series HD	Double Arm	Vertical	Side Hinge	4-Spiral Torsion Springs	3"
4500 Series HD	Single Arm	Vertical	N/A	Shur-Strap™	3"

NOTE: Choosing heavy-duty Shur-Return™ instead will NOT permit manual override while heavy-duty cable return will.

CONVERSION COMPONENTS

KIT NAME	P/N
Alum Roll Tube - 3" x 12'	1118639
Alum Roll Tube - 3" x 16'	1704439
Alum Roll Tube - 3" x 20'	1704398
Alum Roll Tube - 3" x 24'	1704236
Alum Splice Tube - 3"	1704863
Manual Crank Kit - 3"	1122879

STANDARD FEATURES AND OPTIONS

A	RETURNS		
•	4-Spiral Torsion Springs per Arm	Standard	
•	Shur-Strap™ - Single Arm Kits	Standard	
1	Heavy-Duty Shur-Return™	*N/C	N/C
2	Heavy-Duty Cable Return	*N/C	N/C
B	MOUNTING BRACKETS		
•	Heavy-Duty Aluminum Brackets	Standard	
C	TORSION ARMS		
•	Heavy-Duty Aluminum Arms	Standard	
D	MOTOR COVERS		
•	Black Motor Cover	Standard	
1	Chrome Motor Cover	Add	
E	WIRING		
•	Cab Wiring Kit - 6 Ga. x 30' Wire	Standard	
•	Trailer Wiring Kit - 6 Ga. w/SMARTwire™	Standard	

F	SPLINE CAPABILITY	
•	Gate Flex™ - Double Arm Kits	Standard
•	Shur-Strap™ - Single Arm Kits (Exposed Spline)	**Standard
1	Mnl Override - Needed w/Hinge Depth Over 2"	Add
G	OTHER OPTIONS	
1	Offset Crank Retainers (2 are required)	***Add/Ea
2	Extra ShurLink EZR™ Remote	Add
3	Extra ShurLink PRO™ Remote	Add
	ACCESSORIES	
	1131664 ShurLink™ LiteALL™ - 2 Light	Add/Ea

*Returns should be chosen according to trailer configuration.
**Exposed Spline
***Used to store crank arm.

ELECTRIC OPERATION

MOTOR REVERSING SOLENOID
P/N 1703845

SOLENOID COVER
P/N 1703896

SPRINGS

FLAT COIL SPRING
P/N 1111027

APEX

TIGHT SPACING

In situations where operators have limited spacing between the back of the cab and the front of the trailer, tight turns can damage automatic tarp system components. The APEX™ system's low-profile electric motor allows use of the APEX™ system on trailers when other covering systems may not be a viable option.

CHALLENGING REAR DOOR HINGES

Unique two-knuckle rear arm (patent pending) allows APEX™ to operate effectively on trailers where rear door top hinges are located as much as 10" forward from the rear of the trailer. Forward-mounted rear hinges render most other tarp systems' rear arms unusable. The APEX™ gets the job done when others cannot.

SUPERIOR MOTOR AND CIRCUIT PROTECTION

APEX™ offers "Express Mode" functionality when used with capable models of Shur-Co's ShurLink™ wireless remote controls, which provides automatic, one-push covering and uncovering without current spikes. SMARTwire™ Connectors seal all terminal connections and eliminate corrosion.

RETROFIT-ABLE

APEX™ is compatible with most brands of roll tarp systems with flat caps. Owners of manual side-to-side tarp systems interested in converting to electric OR those unsatisfied with their current electric tarp systems can upgrade by retrofitting their trailer with the APEX™.

KEY FEATURES

- Covers Chip/Refuse Loads as Tall as 24' Above Trailer Top Rail
- Fits Trailers w/ Reduced Spacing Between Tractor and the Trailer
- Superior Motor & Circuit Protection
- Retrofit-able to Trailers Pre-Installed Tarp Systems
- ShurLink PRO™/ShurLink EZR™ Remote Systems Capabilities, See Accessories Section in Catalog for Details

Table of Contents

Replacement Parts

MORE PRODUCT INFORMATION

Want to learn more? Simply scan to explore further details about APEX features.

COMPLETE KIT

KIT NAME	ROCKER	ROCKER GATEFLEX™	EZR™	EZR™ GATEFLEX™	PRO	PRO GATEFLEX™
APEX™ Standard Roll	1810369	1810371	1811700	1811704	1811701	1811705
APEX™ Reverse Roll	1810370	1810372	1811702	1811706	1811703	1811707

PIPE KITS - LONG PIPE			P/N
44' - 47'	48' of Pipe w/Splices and 22 U-Clamps & Screws	Add	1810392
47' - 51'	52' of Pipe w/Splices and 22 U-Clamps & Screws	Add	1810393
51' - 53'	56' of Pipe w/Splices and 22 U-Clamps & Screws	Add	1810394

PIPE KITS - SHORT PIPE			P/N
44' - 47'	48' of Pipe w/Splices and 22 U-Clamps & Screws	Add	1811750
47' - 51'	52' of Pipe w/Splices and 22 U-Clamps & Screws	Add	1811751
51' - 53'	56' of Pipe w/Splices and 22 U-Clamps & Screws	Add	1811752

OPTIONS AND FEATURES

ELECTRIC OPERATION

MOTOR REVERSING SOLENOID
P/N 1703845

SOLENOID COVER
P/N 1703896

SPRINGS

FLAT COIL SPRING
P/N 1111027

TARPS & ACCESSORIES

SHURLINK

KEY FEATURES

- Two new water-tight receiver enclosures and two new remotes.
- ShurLink™ utilizes a single communication platform for all devices, allowing the new family of receivers and remotes to conveniently operate nearly every application.
- A phone app brings the ability for customization and configuration to your ShurLink™ system. Available for iOS and Android.
- EZR™, PRO and the app all use the same ShurLink™ Wireless System, making it easy to mix and match any combination of remotes, the app, and the receivers on a single trailer or train.

MORE PRODUCT INFORMATION

Want to learn more? Simply scan to explore further details the ShurLink™ Wireless Remote System.

E-COMMERCE STORE

Search through our large selection of Genuine replacement parts, tarps, and more. Shop Shurco today!

The ShurLink Wireless System, offered exclusively from Shurco introduces innovative, new properties while retaining your favorite features from its predecessor, the SMARTransmitter® series. ShurLink™ Wireless System has replaced the SMART2™ and SMART3™ remotes with two new remotes, the ShurLink EZR™ and the ShurLink PRO™.

As an innovator in the tarping industry, Shur-Co™ has a long-standing tradition of engineering, manufacturing and selling the most advanced products on the market. This tradition continues with ShurLink™. See below to compare the features of the new remote series.

SMART REMOTE TO SHURLINK REMOTE (TX) COMPARISON

FEATURES	SMART3™ (DISCONTINUED)	ShurLink EZR™	SMART2™ (DISCONTINUED)	ShurLink PRO™
Operation Type	Hand Held Remote	Hand Held Remote	Hand Held Remote	Hand Held Remote
Operation Technology	SMARTech™	ShurLink™ Technology	SMARTech™	ShurLink™ Technology
Wireless Operation Available	Yes	Yes	Yes	Yes
Wireless Range	<100 Feet	Up to 150 Feet	<100 Feet	Up to 150 Feet
Wireless Two-Way Communication	No	No	Yes	Yes
Precision Control	Yes	Yes	Yes	Yes
Number of Devices	5	5	100	30
Power Source	Two AAA Batteries	Two AAA Batteries	Rechargeable Lithium Bat.	Rechargeable Lithium Bat.
Battery Charging Cradle	No	No	Yes	Yes
Digital Display	No	No	Yes, Black and White	Yes, Colored
Ability to Name Devices	Sticker on Remote Only	Sticker on Remote Only	With Digital Display	With Digital Display
Ability to Reorder Paired Device List	No	No	Yes	Yes
Current/Active Device ID	Yes	Yes	Yes, with Status Bar	Yes, with Status Bar
Back-lit Digital Display	No	No	Yes	Yes
Sealed Control Box	Yes	Yes	Yes	Yes
Utilizes SMARTwire™ Connections	Yes	Yes	Yes	Yes
Protective Flip-Style Cover	Yes	Yes	Yes	Yes
Buttons Protected by Cover	Yes	Yes	Yes (Key)	Yes
Any Button Emergency Shut-Off	Yes	Yes	Yes	Yes
Interference by Competing Remote	No	No	No	No

APP STORE

APP SUPPORT

SHURLINK™APP

Download the ShurLink Wireless app by scanning the APP STORE QR code. Scan the YOUTUBE QR code for product support.

LITEALL

WORK LIGHTS

High-intensity LED flood beam in hinged bracket swivels to direct light. 13' power cord has automotive-style quick connections.

SHURLINK WIRELESS REMOTE OPERATION

SMART-touch technology for precision control of Shurco electrics! The ShurLink PRO™ remote offers 2-way communication in an easy-to-read digital display.

20" EXTENSION CABLE

Two-conductor 16-gauge cable provides additional positioning flexibility for LiteALL™ flood beams. Automotive-style quick connections make for easy installation of wiring.

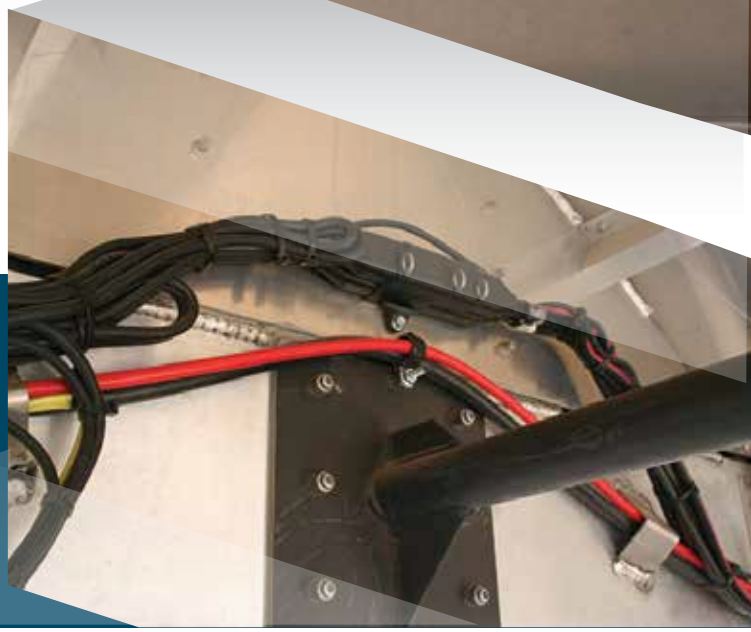

MORE PRODUCT INFORMATION

Want to learn more? Simply scan to explore further details the LiteALL™ wireless LED work light.

E-COMMERCE STORE

Search through our large selection of Genuine replacement parts, tarps, and more. Shop Shurco today!

SHURLINK LITEALL

w/ SMARTwire™ ADAPTER	P/N
ShurLink™ LiteALL™ - 2 Light	1131664
w/o SMARTwire™ ADAPTER	**P/N**
ShurLink™ LiteALL™ - 2 Light	1131666

NOTE: Includes control module, lights, complete mounting hardware. Does NOT include remote or extension cable.

LITEALL ADD ON

CONTROL MODULE	P/N
ShurLink™ Control Module w/WeatherPack™	1131665
REMOTES	**P/N**
ShurLink EZR™ Remote	1131576
ShurLink PRO™ Remote w/Cradle/Charging Cable	1131575
ShurLink™ Charg. Cable USB - A-Male to C-Male - 3'	1706836
WORK LIGHT	**P/N**
LED Work Light w/WeatherPack™ Connector	1122706
Work Light Mtg Hdw	1120672
EXTENSION CABLES	**P/N**
Extension Cable w/WeatherPack™ - 16 Ga. - 10'	1126433
Extension Cable w/WeatherPack™ - 16 Ga. - 20'	1122742
Extension Cable w/WeatherPack™ - 18 Ga. - 20'	1122704
SMARTwire™ CONNECTORS	**P/N**
SMARTwire™ Adapter w/WeatherPack™	1122690
SMARTwire™ Dual-Conductor Socket - 6 Ga. x 3'6"	1120670
OUTPUT HARDWARE	**P/N**
Output Splitter w/WeatherPack™	1122705
Output Adapter Cable	1127599
JUNCTION HARDWARE	**P/N**
Junction Block Kit w/Harness Plug (1)	1120849

EXTENSION CABLES

P/N 1126433 - 16 Ga. x 10'
P/N 1122742 - 16 Ga. x 20'
P/N 1122704 - 18 Ga. x 20'

- For power connection w/WeatherPack™ connectors provide additional flexibility in mounting location of control module.
- Available in 10' or 20' lengths.
- Two-conductor 18-ga. cable offers additional positioning flex for LiteALL™ LED flood beams.
- WeatherPack™ Connectors makes for east install.

WORK LIGHT

P/N 1122706

- High-intensity LED flood beam in hinged bracket swivels to direct light.
- 13" cord WeatherPack™ connectors.
- Power: 24 watts. Outputs: 1600 lumens. IP

Rating: AP67. Estimated Life: 30,000 Hours. Purchase of Mounting HDW Kit recommended for each light purchased. Contains rubber grommet insert, rubber grommet, nylon wire clips (6), self-drilling screws (6).

SMARTWIRE™ ADAPTER

P/N 1122690

- Easy install to SMARTwire™systems: 4500 Series HD, Auto-Trap™ and ProTrap®. User supply 12V DC current to LiteALL™ module.
- Reduces wiring of connectors and eliminates need to splice into existing truck/trailer wiring.
- 14-ga. 1' extension. Also available with molded 2-way bullet connector.

JUNCTION BLOCK KIT W/HARNESS PLUG

P/N 1120849

- Provides connection to 12V power on pre-existing 4500 systems (already installed on 4500 HD/ProTrap® combo kits).
- On existing systems, unplug SMARTwire™ dual-connector socket from 4500 receiver box and insert SMARTwire™ junction block.
- LiteALL™ will then draw power from block using SMARTwire™ adapter wire w/WealtherPack™ connectors.

2-WAY CONDUCTOR SOCKET

P/N 1120670

- Provides trailer socket connection for supplying 12V power if none previously exits.
- Opposite end of 3" conductor socket wire is plug-and-play compatible with SMARTwire™ junction blocks.

SERVICE TRUCK POWER KITS

KEY FEATURES

- Mounts on the Vehicle Grille or other Convenient Locations
- Provides Power to Trailers w/ Horizontal/Vertical Power Sockets
- Ideal for Machinery that may Require Frequent jump starts
- Sealed SMARTwire™ Connector Mid-Jumper Cables/Service Truck
- Run Tarp Systems that are Typically Operated by Rocker Switch
- Light up the Scene with LiteALL™ LED Flood Beam
- Increase the Number of Sealed SMARTwire™ Connections
- Extend your Reach with Extension Cables from Your Service Truck to the Accessories

MORE PRODUCT INFORMATION
Want to learn more? Simply scan to explore further details about our Service Truck Power Kits.

E-COMMERCE STORE
Search through our large selection of Genuine replacement parts, tarps, and more. Shop Shurco today!

2-WAY CONDUCTOR PLUG
P/N 1128066

JUMPER CABLE KIT
P/N 1128067

ROTARY SWITCH
P/N 1128410

2-WAY CONDUCTOR SOCKET
P/N 1120670

JUNCTION BLOCK W/HARNESS PLUG
P/N 1120849

EXTENSION CABLE
P/N 1128099 - 8' P/N 1128101 - 16'
P/N 1128100 - 12' P/N 1128102 - 20'

ACCESSORIES BAG
P/N 1128299

LED WORK LIGHTS
P/N 1128324

MOUNTS ON VEHICLE GRILLE OR OTHER CONVENIENT LOCATION	P/N
Service Truck Power Kit w/Male 2-Pole Conductor	1128052
Base Service Truck Power Kit	1128064
Service Truck Power Kit w/o Circuit Breaker	1128488
- 4-Ga. Wire, 12' Long	
- High-Quality Manual Reset Circuit Breaker	
POWER FOR TRAILERS WITH HORIZONTAL OR VERTICAL SOCKETS	**P/N**
2-Way Conductor Plug	1128065
- 6-Ga. Wire, 10' Long	
- Use w/Service Truck Power Kit and 2-Way Socket	
IDEAL FOR MACHINERY NEEDING FREQUENT JUMP STARTS	**P/N**
2-Way Conductor Socket	1128066
- 6-Ga. Wire, 3' 6" Long	
- Includes Mounting Bracket	
- Installs on Winches or other 12V Motors	
- Use w/Service Truck Power Kit and 2-Way Plug	
EXTENDS REACH FROM SERVICE TRUCK TO ACCESSORIES	**P/N**
Extension Cable - 8'	1128099
Extension Cable - 12'	1128100
Extension Cable - 16'	1128101
Extension Cable - 20'	1128102
- 4-Ga. Wire in 4 Lengths	
- Use w/Service Truck Power Kit, 2-Way Plug and Jumper Cable Kit	
SEALED SMARTWIRE™ CONNECTION BETWEEN CABLES AND SERVICE TRUCK	**P/N**
Jumper Cable Kit	1128067
- 4-Ga. Wire, 12' Long	
- High-Quality, Insulated Cable Clamps	
- Use w/Service Truck Power Kit	
RUNS TARP SYSTEMS THAT ARE TYPICALLY OPERATED BY AN IN-CAB ROCKER SWITCH	**P/N**
Rotary Switch	1128410
- 6-Ga. Wire, 8' Length (4' Input, 4' Output)	
- Built-In High-Quality Reset Breaker	
LIGHT UP THE SCENE WITH A LITEALL™ LED FLOOD BEAM	**P/N**
Service Truck LED Work Light	1128324
- IP67 Waterproof Rating	
-1600 Lumens	
PLENTY OF ROOM FOR ALL KIT CHOICES LISTED ABOVE	**P/N**
Service Truck Accessories Bag	1128299

CONTROL MODULES

CONNECT TO YOUR SUPPLY VOLTAGE

These modules connect to supply voltage for smooth, seamless operation of your SMARTrailer™ accessories. When output is on, white output wire is connected to 12V; when off, it's grounded.

SAFETY LOCKOUT FEATURE

All modules except LiteALL™ have a safety lockout feature. While locked, outputs cannot be turned on using the control box. Safety lock is automatically disabled when using the remote. While locked, outputs cannot be turned on from the control box, but latching outputs can be turned off. To unlock, press and hold both box switches for one second.

EXTERNAL BOX SWITCHES

External box switches are used to pair the ShurLink™ remotes, PRO and EZR™, to the control box. Internal access is NOT required.

E-COMMERCE STORE

Search through our large selection of Genuine replacement parts, tarps, and more. Shop Shurco today!

LATCHING	P/N
ShurLink™ Control Module - Latching - On/Off w/Safety Lockout	1131658

- Conveyors: While output remains on, supplies 12V to customer-specific conveyor control solenoids.
- Tag Axles: Can supply 12V continuous signal to customer-specific electric-over-pneumatic solenoids.
- Pump Motors: Can supply 12V continuous signal to customer-specific pump motors or control solenoids.

MOMENTARY	P/N
ShurLink™ Control Module - Momentary - Up/Down	1131659
ShurLink™ Control Module - Momentary - Left/Right	1131660
ShurLink™ Control Module - Momentary - Extend/Retract	1131661

- Auger Conveyors: Stops/Starts conveyor movement in applications where preexisting controls require a momentary 12V "on" signal to start conveyor, then a sub-sequent momentary 12V "off" signal to stop it.
- Proportional Valves: Allows for momentary control of proportional valves (for speed control, for example).
- Auger Hydraulics: Allow for momentary control of electric-over-hydraulic auger positioning cylinders.

MOMENTARY	P/N
Shur-Link™ Control Module - Momentary - Open/Closed	1131662

- Proportional Valves: Allows for momentary control of proportional valves (for speed control, for example).
- Auger Hydraulics: Allow for momentary control of electric-over-hydraulic auger positioning cylinders.

4500

MOTOR KEY FEATURES

- Direct-Drive Motor — No Chain-Driven Reduction
- Highly Reliable Magnetic Brake – No Electrical Energy Used to Actuate Brake, So There are No Electrical Connections to Misfire
- Durable All-Metal Gearbox
- 12-Volt Electrical Required
- Optimal Torque Rather Than Increased Torque for Tarps
- Features High-Efficiency Planetary Gear Reduction
- All Motors Have a 3-Year Warranty
- Available Motor P/N: **1120967**

APEX | IRONSIDE

MOTOR KEY FEATURES

- Direct-Drive Motor — No Chain-Driven Reduction
- Highly Reliable Magnetic Brake – No Electrical Energy Used to Actuate Brake, So There are No Electrical Connections to Misfire
- Optimal Torque Rather Than Increased Torque for Tarps
- 12-Volt Electrical Required
- Optimal Torque Rather Than Increased Torque for Tarps
- All Motors Have a 3-Year Warranty
- Available Motor P/N: **1127091**

DURABUILT™

MOTOR KEY FEATURES

- 90:1 Gear Ratio Provides Extra Torque
- 100% Sealed Motor and Gear Casings
- Replaces All Competitors Motors & Fits Front-to-Rear Systems
- 100% Quality Control Tested
- All Motors Have a 3-Year Warranty
- Available Motor P/N: **1704878** 12-Volt, 900W

MORE PRODUCT INFORMATION
Want to learn more? Simply scan to explore further details about our DuraBuilt™ Motor.

TARP REPAIR SUPPLIES

	DESCRIPTION	P/N
	Professional Tarp Repair Kit	*1108059
	Standard Tarp Repair Kit	*1102111
	Strip Kit w/Glue	1120613
	Tarp Repair Kit w/ Vinyl Tape - 6" X 10'	1128814
	Vinyl Patch Kit	1801724
	Handi Grommet Kit w/Grommets	1703251
1	Wooden Roller	1701391
2	2" x 3" Patch w/Radius Corners	1111869
3	3" x 4" Patch w/Radius Corners	1111870
4	4" x 5" Patch w/Radius Corners	1111871
5	3" Round Patch	1111872
6	Vinyl-Coated Tarp Remnant - Black	1128714
	Vinyl-Coated Tarp Remnant (specify color)	1107371
	Vinyl Repair Tape - 6" x 50' (not shown)	**1706352
7	HH-66 Thinner - Pint	1700697
8	HH-66 Thinner - Gallon	1700602
	HH-66 Vinyl Cement - 8 Oz.	**1700356
9	HH-66 Vinyl Cement - Pint	1801723
10	HH-66 Vinyl Cement - Quart	1700355
11	HH-66 Vinyl Cement - Gallon	1700354
	#3 Brass Grommet (minimum order 25)	**1700673

*Black tarp unless otherwise specified.
**Not shown in diagram.

PROFESSIONAL KIT

STANDARD KIT

GROMMET KIT

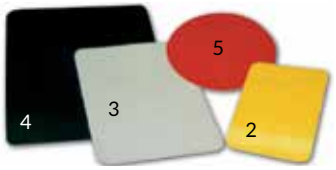

EPDM RUBBER STRAP | BETTER FOR HOT CLIMATES

DESCRIPTION	MAX STRETCH	CASE QTY	P/N
Natural Rubber Strap - 10"	15"	50	1702159
Natural Rubber Strap - 15"	23"	50	1702160
Natural Rubber Strap - 21"	32"	50	1702161
Natural Rubber Strap - 31"	47"	50	1702162
Natural Rubber Strap - 21"	62"	50	1702163

EPDM RUBBER STRAP | BETTER FOR COLD CLIMATES

DESCRIPTION	MAX STRETCH	CASE QTY	P/N
Natural Rubber Strap - 10"	15"	50	1700648
Natural Rubber Strap - 15"	23"	50	1700649
Natural Rubber Strap - 21"	32"	50	1700650
Natural Rubber Strap - 31"	47"	50	1700651

	STANDARD	PREMIUM COLORS: INCLUDE A 15% UP-CHARGE									
	BLACK	RED	WHITE	BLUE	GREEN	GRAY	MAROON	YELLOW	GRAPE	ORANGE	TAN
18-OZ.	✓*	✓*	✓*	✓*	✓*	✓	✓	✓*	✓	**	CALL
22-OZ.	✓*	✓	✓	✓	✓	✓	✓				CALL
CRXT	✓*	**		**							

*Available through any Shurco (US) location.
**Available only through Shurco Florida Location.

NOTE: Our fabric maintains consistent color year after year. However, we cannot guarantee an exact color match. Sometimes, variations in sheen can make the color appear slightly different. Please note that the colors shown may not exactly match the actual tarp color.

MIGHTY MESH
- Strongest Truck Tarp Material Available

KNITTED BLACK
- Rip Resistant

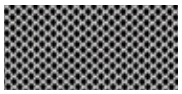

WHITE POLYESTER
- Ideal for Cold-Weather Applications

BLACK
- Heavy-Duty Mesh for Dump Trucks & Trailers

MULTI-COLOR PVC
- Industry Standard Truck Tarp Material

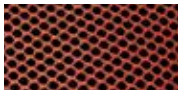

ORANGE KNITTED
- Mesh for Sidewinder™ II and Sidewinder™ 350

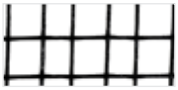

BLACK GRID
- Mesh for Sidewinder™ II and Double-Flip™

MORE PRODUCT INFORMATION
Scan the QR code for additional Mighty Mesh® product information.

E-COMMERCE STORE
Search through our large selection of Genuine replacement parts, tarps, and more. Shop Shurco™ today!

REPLACEMENT PARTS

TABLE OF CONTENTS

REPLACEMENT PARTS

SWAT® 35
Quick-Flip4™ 36
Hy-Tower™ 39
Sidewinder™ II | Sidewinder™ 350 43
Double-Flip™ 45
Shur-Lok® | Belt 'N Ratchet Common Parts 46
4500 Series HD | APEX™ Common Parts 57
4500 Series HD 61
APEX™ 67

REPLACEMENT PARTS FOR DISCONTINUED SYSTEMS

Quick-Flip™ III 70

THINGS TO NOTE IN REPLACEMENT PARTS

FEES
All components other than standard may require a non-refundable $100 special processing fee. Call for details.
BOWS
Bow rise is typically 2" greater than rise of cap. Other rises available.
CAPS
Cap rise is typically 2" less than rise of bow. Other rises available.
Mounting hardware NOT included with end caps.

Remember that utilizing non-Genuine Shurco and Donovan® parts can void your warranty agreement.
All Durabuilt™ motors featured on Shurco Construction and Waste products are 90:1 gear ratio provides extra torque.

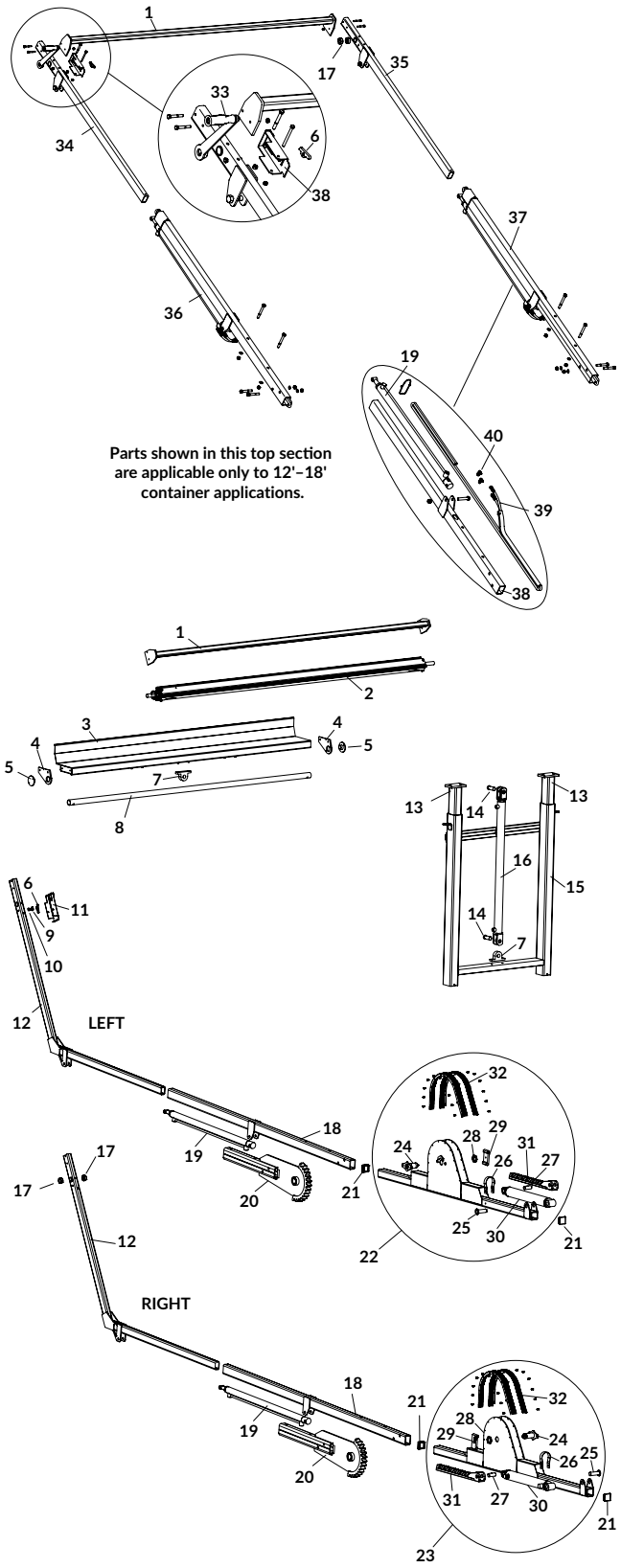

SWAT

	DESCRIPTION		P/N
	SWAT® 20' to 22' Arm Kit - L		1809911
	SWAT® 20' to 22' Arm Kit - R		1809912
	SWAT® 18' to 21' Arm Kit - L		1811744
	SWAT® 18' to 21' Arm Kit - R		1811745
	SWAT® 12' to 18' Arm Kit - L		1811746
	SWAT® 12' to 18' Arm Kit - R		1811747
	Gantry Base Frame W/Telescoping Legs	HR4511	1809687
1	Stabilizer Bar	HR4753	1808873
2	Roller Bar - SWAT®	H7002C	1803805
3	Tarp Roll Base Rest	HR4505-2	1808872
4	Tarp Tube Bracket Kit	HR4756	1810063
5	Tarp Tube Cap	HR4757	1809148
6	Ratchet Pawl	HR4788	1809209
7	Gantry Cylinder Clevis Eye	H7032	1808869
8	Tarp Tube	HR4758-2	1808865
9	Pawl Torsion Spring	HR4786	1808851
10	Ratchet Pawl Bushing	HR4787	1808875
11	Ratchet Guard Assy - 18' to 22' Container	HR4789	1809009
11	Ratchet Guard Assy - 12' to 18' Container		1811487
12	Upper Arm - 18' to 22' Container	HR4751	1808874
12	Upper Arm - 12' to 18' Container		1811484
13	Gantry Telescoping Leg	HR4512	1808871
14	Clevis Pin - 1" OD	H7062	1809013
15	Gantry Base Frame	HR4515	1808868
16	Gantry Cylinder - 2" Bore - 36" Stroke	HR4520	1808891
17	Shaft Locking Collar - 1"	HR4624	1808855
18	SWAT® Lower Arm - 93-1/4"	HR4750	1808879
18	SWAT® Lower Arm - 75-3/4"		1810403
19	Lower Arm Cylinder - 1 1/2" Bore - 36"	HR4752	1808892
20	Pivot Gear Arm	HR4760	1808887
21	Square End Plug	HR4548A	1808846
22	Gear/Pivot Assy - 18' to 22' Container - L	HR4762A	1809355
22	Gear/Pivot Assy - 12' to 18' Container - L		1811496
23	Gear/Pivot Assy - 18' to 22' Container - R	HR4761A	1809360
23	Gear/Pivot Assy - 12' to 18' Container - R		1811497
24	Pivot Pin Assy	A3881KIT	1809284
25	Rack Cylinder Mtg Pin	A3883	1808883
26	Cylinder Loop Strap	HR4731	1808881
27	Rack Cylinder Connecting Pin	D18836	1809014
28	Castle Nut	HR4785	1809169
29	Pivot Hose Guide	HR4728	1809669
30	Hydraulic Cylinder - 2 1/2" Bore - 16" Stroke	HR4719	1808890
31	Rack Gear	A3868B	1808886
32	Brush Kit		1809776
33	Crank Handle Assy		1809177
34	Upper Arm Assy - L		1811491
35	Upper Arm Assy - R		1811492
36	Lower Arm Assy - L		1810404
37	Lower Arm Assy - R		1810405
38	SWAT® Lower Arm - 75-3/4"		1810403
39	Hyd. Hose - 1/4" x 16' x #6 - JICF One End		1808935
40	Hyd. Fitting - #6 JICM x #6 ORBM x EL 90		1705725
	TARPS		
	Mighty Mesh® w/Flaps - 9'8" x 28'	HR4616	1801640
	Mighty Mesh® - 8' x 28'		1801686
	MM w/Flaps & Hook Lift Cutout - 9'8" x 28'		1809675
	Mighty Mesh® & Hook Lift Cutout - 8' x 28'		1809674

Table of Contents

Replacement Parts

HOUSING ASSEMBLIES

	DESCRIPTION	P/N
	Housing Assy	1808662
1	Housing	1800491
2	Reversed Bearing Flange	1801950
3	Hex Lock Nut - 1/4"	1800699
4	Direct-Drive Motor - 900 Watt - 12V	1704878
5	Selt-Threading Bolt - 5/16" x 1-1/4"	1800460
6	Flat Washer - 5/16"	1800989
7	Hex Head Cap Screw - 1/4" x 3/4"	1800767
8	Flat Washer - 1/4"	1800784
9	Flat Washer - 1/2"	1800996
10	Lock Nut - 1/2"	1800995
11	Hex Head Cap Screw - 1/2" x 4"	1801024
12	Housing Deflector - 105-3/4"	1800477
13	Tarp Spool Axle - 3-Way Attachment -98"	1809330
14	Hex Head Cap Screw - 5/16" x 2-1/2"	1800942
15	Shaft Extension - 3/4" x 4"	1800980
16	Lock Nut - 5/16"	1800990

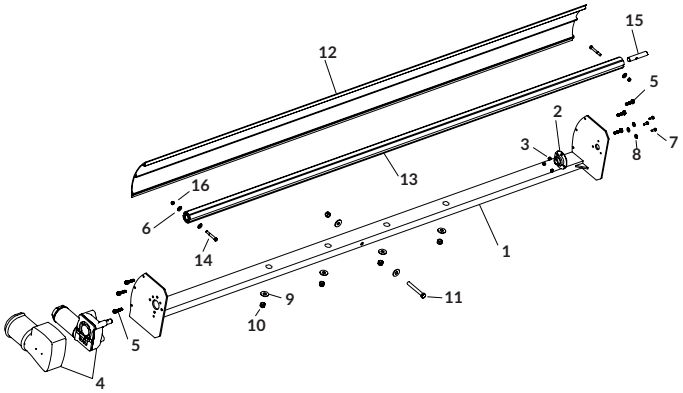

TOWER ASSEMBLIES

	DESCRIPTION	P/N
1	Tower Outer Stage	1811455
2	Tower Inner Stage	1801621
3	Mounting Plate	1811474
4	Mounting Angle	1811473
5	Hex Head Cap Screw - 1/2" x 3"	1800901
6	Flat Washer - 1/2"	1800996
7	Lock Nut - 1/2"	1800995
8	Cylinder - 1-1/2" x 42" x 1"	1800082
9	Hydraulic Fitting - 4MJIC x 3/8" x 90°	1800306
10	Hydraulic Fitting - 4MJ x 4MP x STR	1801017
11	Hydraulic Pressure Control Compensator - 1-3/4"	1801018
12	Hydraulic Fitting - 3/8MP x 90°	1801016

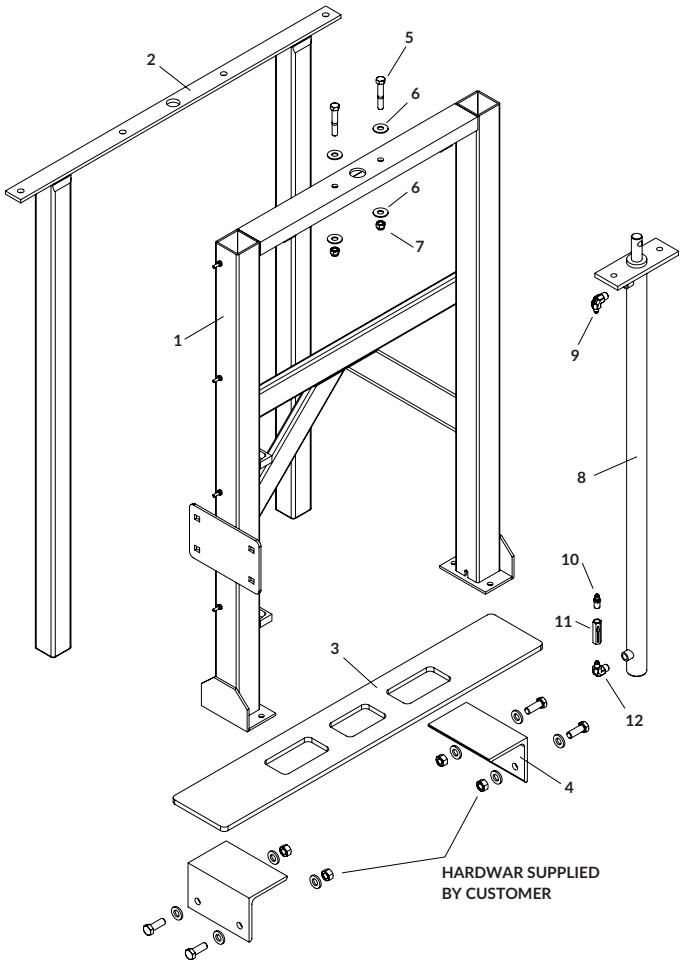

Table of Contents

Replacement Parts

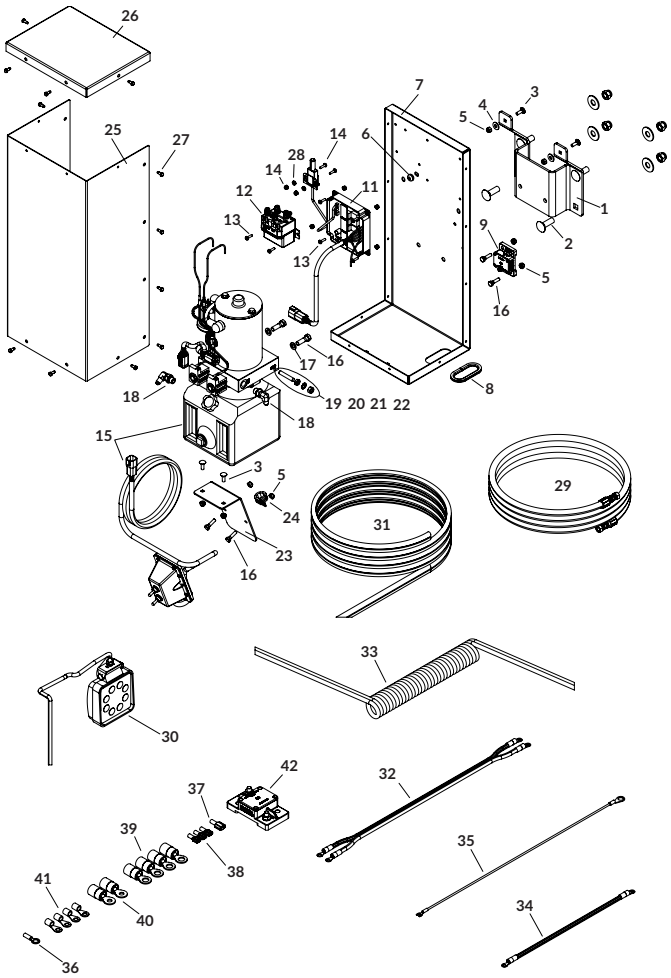

ELECTRIC AND HYDRAULIC COMPONENTS

	DESCRIPTION	P/N
1	Enclosure Mtg Bracket	1811461
2	Carriage Bolt - 1/2" x 1-1/2"	1800356
3	Carriage Bolt - 1/4" x 3/4" - GR5	1705597
4	Flat Washer - 1/4"	1800784
5	Hex Lock Nut - 1/4"	1800699
6	Rubber Grommet - 3/16" x 11/32"	1809474
7	Enclosure Rear Panel	1811453
8	Rubber Edge Trim - 1/16" x 5/16"	1809484
9	Circuit Breaker - 60 Amp	1800417
10	Hex Head Cap Screw - 1/4" x 1"	1700381
11	Wireless Receiver w/Antenna	1810430
12	Motor-Rev Solenoid 12V - 2 Pt Mnt - Black Wire	1703845
13	Flange Cap Screw - #8-32 x 5/8"	1809475
14	Nylon Lock Hex Nut - #8-32	1804461
15	Hydraulic Pump w/Switch Box	1811448
16	Hex Head Cap Screw - 3/8" x 1-1/4"	1811464
17	Lock Washer - 3/8"	1800991
18	Male Hydraulic Fitting - #6 x 90°	1800925
19	Stud - 5/16" x 1-3/4"	1809470
20	Hex Jam Nut - 5/16"	1809471
21	Lock Washer - 5/16" - External Tooth	1704912
22	Hex Nut - 5/16"	1800765
23	Switch Bracket	1811460
24	Wire Clip - 3/4" ID	1702108
25	Enclosure Front Panel	1811452
26	Enclosure Top Panel	1811451
27	Self-Tapping Screw - #10-24 x 1-1/2"	1809472
28	Hex Nut - #8-32	1704869
29	Hydraulic Hose - 84" OAL	1801627
30	LED Work Light w/Quick Connector	1704719
31	Dual-Conductor Wire - 4 Ga. - 16'	1800220
32	Motor Power Wire Assy	1811465
33	Coiled Wire - 6 Ga x 92" x 3' Leads	1810425
34	Power Jumper Wire	1811466
35	Receiver Ground Wire - 14 Ga. - 16"	1811467
36	Ring Terminal - 18 Ga. x 5/16" Stud	1705800
37	Quick Disconnect - Male x 18 Ga. x 1/4"	1705072
38	Quick Disconnect - Female x 18 Ga. x 1/4"	1705073
39	Ring Terminal - 4 Ga. x 3/8" Stud - Battery	1800158
40	Ring Terminal - 4 Ga. x 1/4"	1800302
41	Ring Terminal - 6 Ga. x 1/4" Stud	1800658
42	Circuit Breaker - 175 Amp	1811476

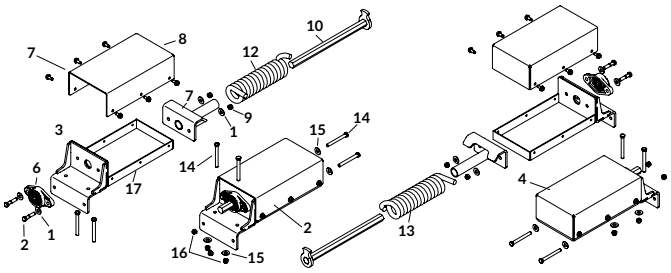

SPRING PIVOTS - SINGLE/TANDEM AXLES

	DESCRIPTION	P/N
1	Flat Washer - 3/8"	1800994
2	Hex Head Cap Screw - 3/8" x 1-3/4"	1804883
3	Spring Pivot Mount	1808663
4	Bridge Mount Spring Assy - R	1808664
5	Bridge Mount Spring Assy - L	1808665
6	Hex Flange Bore Unit	1801082
7	Self-Tapping Screw - 5/16" x 3/4"	1808668
8	Spring Housing Cover	1808683
9	Lock Nut - 3/8"	1800993
10	Spring Shaft - 14-1/4" x 7/8" Hex	1808671
11	Spring Retainer Weldment	1118955
12	Torsion Spring 15-Coil - L	1704476
13	Torsion Spring 15-Coil - R	1704477
14	Hex Head Cap Screw - 3/8" x 3-1/4"	1804139
15	Flat Washer - 3/8"	1800994
16	Lock Nut - 3/8"	1800993
17	Spring Housing Base	1808669

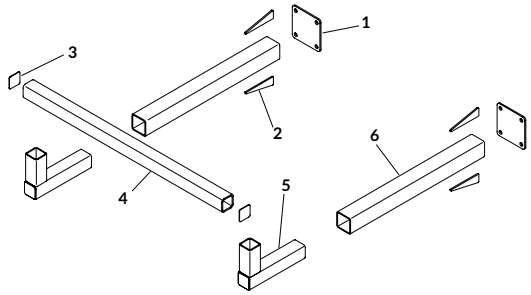

SPRING PIVOT SUPPORTS - SINGLE/TANDEM AXLES

	DESCRIPTION	P/N	PRICE
1	Frame Mount Plate - 3" SQ	1808673	
2	Frame Mount Gusset	1808646	
3	End Cap - 2-1/2" SQ	1808678	
4	Spring Pivot Mount Tube	1808679	
5	Spring Pivot Support Elbow	1808793	
6	Spring Pivot Support Tube	1808672	

SPRING PIVOTS - TRAILER

	DESCRIPTION	P/N
1	Spring Shaft - 23-1/4" x 7/8" Hex	1808636
2	Lock Nut - 3/8"	1800993
3	Flat Washer - 3/8" - SAE	1803979
4	Hex Bearing - 7/8" ID	1801243
5	Inner Bearing Plate	1808639
6	Hex Head Cap Screw - 3/8" x 1"	1800795
7	Bearing Spacer	1808638
8	Spring Catch - 7/8" Hex	1808637
9	Outer Bearing Plate	1808640
10	Lock Nut - 1/2"	1800995
11	Spring Pivot Tube	1808641
12	Internal Spring Assy - L	1808635
13	Internal Spring Assy - R	1808634
14	Carriage Bolt - 1/2" x 1-1/2"	1800356
15	Frame Mount Gusset	1808646
16	Frame Mount Plate - 4-1/2" SQ	1808645
17	Torsion Spring 22-Coil - R	1800280
18	Torsion Spring 22-Coil - L	1800279

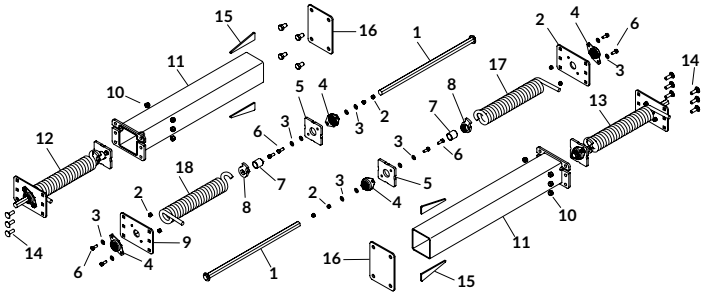

PIVOT ARM - SINGLE AXLES

	DESCRIPTION	P/N
1	Rear Cross Piece	1800300
2	Cast Elbow - 90°	1800597
3	Alum Return Arm - 150"	1800421
4	Spring Pivot Connector	1801636
5	Pan Head Cap Screw - 5/16" x 2-1/4"	1800270
6	Flat Washer - 5/16"	1800989
7	Lock Nut - 5/16"	1800990

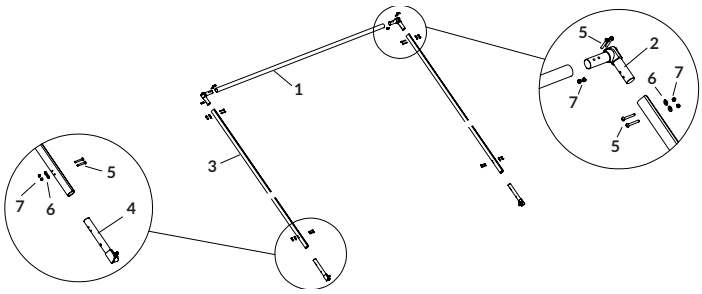

PIVOT ARMS - MULTI/TANDEM AXLES

	DESCRIPTION	P/N
1	Rear Cross Piece	1800300
2	Cast Elbow - 90°	1800597
3	Alum Upper Return Arm - 50"	1800548
4	Arm Coupler	1800547
5	Alum Lower Return Arm	1800545
6	Spring Pivot Connector	1801636
7	Pan Head Cap Screw - 5/16" x 2-1/4"	1800270
8	Flat Washer - 5/16"	1800989
9	Lock Nut - 5/16"	1800990

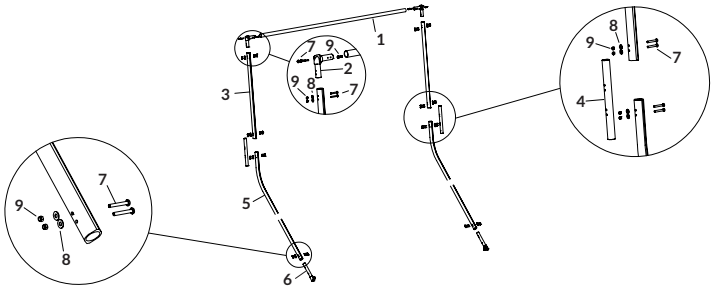

PIVOT ARMS - TRAILERS

	DESCRIPTION	P/N
1	Rear Cross Piece	1800300
2	Cast Elbow - 90°	1800597
3	Alum Return Arm - 240"	1801241
4	Spring Pivot Connector	1801636
5	Pan Head Cap Screw - 5/16" x 2-1/4"	1800270
6	Flat Washer - 5/16"	1800989
7	Lock Nut - 5/16"	1800990

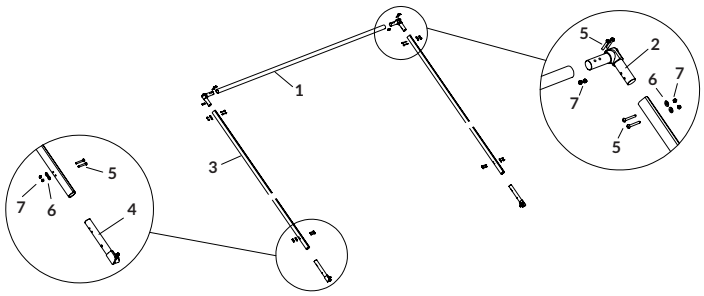

PIVOT ARMS RESET

	DESCRIPTION	P/N
1	Rubber Bumper - Drilled - 4"	1801012
2	Bumper Hold-Down Bar	1800140
3	Pivot Arm Rest	1801324
4	Hex Head Cap Screw - 5/16" x 1-1/2"	1800972
5	Flat Washer - 5/16"	1800989
6	Lock Nut - 5/16"	1800990

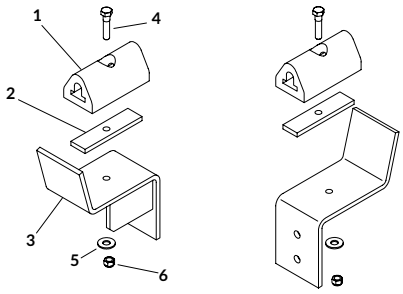

DL BASE ASSEMBLIES

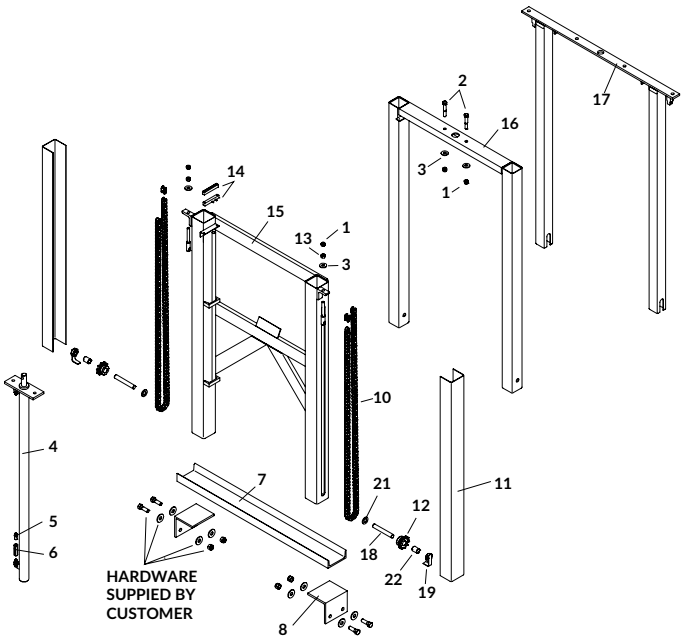

	DESCRIPTION	P/N
	Hy-Tower™ DL Base Kit w/Cylinder [Includes: 4; 5; 6; 15; 16; 17; 2 of 2, 9, 10, 11, 12, 13, 18, 19, 20, 21 & 22; 4 of 1 & 3]	1800085
1	Lock Nut - 1/2"	1800995
2	Hex Head Cap Screw - 1/2" x 3"	1800901
3	Flat Washer - 1/2"	1800996
4	Cylinder - 1-1/2" x 42" x 1"	1800082
5	Hydraulic Fitting - 4MJ x 4MP x STR	1801017
6	Hydraulic Pressure Control Compensator - 1-3/4"	1801018
7	Mounting Channel	1800726
8	Mounting Angle	1801966
9	Master Chain Link - #60	1800080
10	Chain - #60 x 130P	1800081
11	Chain Guard	1800683
12	Sprocket - 60-B-10 x 1"	1800084
13	Hex Nut - 1/2"	1800799
14	Alarm Audible Kit - 4"	1801033
15	Weldment - 3rd Stage	1801209
16	Weldment - 2nd Stage	1801212
17	Weldment - 1st Stage	1801215
18	Sprocket Shaft	1801216
19	Chain Guide Assy	1801218
20	Chain Mount Assy	1801220
21	Flat Washer - 3/4"	1801503
22	Bushing - 3/4" ID x 1" OD x 1-1/4"	1800724
23	Single Magnet Sensor - 1-5/8"	*1808943
24	Single Magnet Sensor w/Wire - 1-5/8"	*1808944

*These items are NOT shown in the drawing.

DL HOUSING ASSEMBLIES

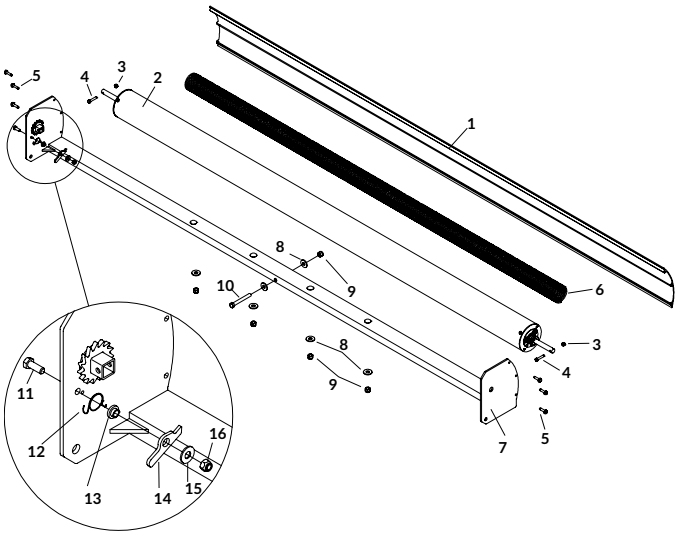

	DESCRIPTION	P/N
	Hy-Tower™ DL Housing Kit [Includes: 1; 2; 3; 7; 11; 12; 13; 14; 15; 16; 18; 19; 20; 21; 23; 24; 2 of 17; 5 of 8 & 9; 6 of 5; 8 of 22]	1800480
	Hy-Tower™ DL Housing Assy [Includes: 1; 7; 6 of 5]	1800479
1	Housing Deflector - 105-3/4"	1800477
2	Roller Bar - Hy-Tower™	1810381
3	Lock Nut - 5/16"	1800990
4	Hex Head Cap Screw - 5/16" x 1-1/2"	1800972
5	Selt-Threading Bolt - 5/16" x 1-1/4"	1800460
6	Spring	1800083
7	Hy-Tower™ DL Housing w/End Plates	1800478
8	Flat Washer - 1/2"	1800996
9	Lock Nut - 1/2"	1800995
10	Hex Head Cap Screw - 1/2" x 4"	1801024
11	Hex Head Cap Screw - 3/8" x 1"	1800795
12	Ratchet Spring	1800698
13	Ratchet Spacer	1800702
14	Ratchet Pawl w/Lever	1800917
15	Flat Washer - 3/8"	1800994
16	Lock Nut - 3/8"	1800993
17	Mounting Angle	*1801966
18	Mounting Channel	*1800726
19	Composite Tube - 1" OD	*1800820
20	Polyethylene Foam - 7/8"	*1800821
21	Hex Head Cap Screw - 5/16" x 1-1/2"	*1800972
22	Wire Ties, Black - 8"	*1800976
23	Rope Assy w/o O-Ring - 3/8" x 50'	*1801387
24	Rope Assy - 5/16" x 8'	*1801388

*These items are NOT shown in the drawing.

Table of Contents

Replacement Parts

DL HYDRAULIC COMPONENTS

	DESCRIPTION	P/N
	Hy-Tower™ DL Pump Assy [Includes: 1; 2; 4; 6; 7; 17; 21; 22; 2 of 3, 18, 19, 20; 4 of 11; 5 of 24; 6 of 23]	1800762
	Hy-Tower™ DL Seal Kit	*1800238
	Rope Assy [Includes: 13; 16]	1801009
1	Hydraulic Pump - 12V M310	1800090
2	Pump Mtg Bracket	1801623
3	Pump Spacer	1801223
4	Clamp - 5" to 7"	1800906
5	Rubber Motor Mount	1801125
6	Hydraulic Hose - 9'	1801222
7	Hydraulic Hose - 12'	1801221
8	Wire Ties, Black - 8"	1800976
9	Hex Head Cap Screw - 5/16" x 1-1/2"	1800972
10	Lock Washer - 3/8"	1800991
11	Ring Terminal - 4 Ga. x 3/8" Stud - Battery	1800158
12	Rope Assy - 5/16" x 8'	1801388
13	Steel Snap - 1/2" Opening	*1800847
14	O-Ring - 3" x 1.50"	*1800846
15	Rope Assy w/o O-Ring - 3/8" x 52"	1801387
16	Solenoid Cover - DL	1801015
17	Circuit Breaker - 150 Amp	*1800458
18	Lock Nut - 3/8"	*1800993
19	Flat Washer - 3/8"	*1800994
20	Hydraulic Fitting - 4JIC x 1/4NPT x MI90	*1800112
21	Dual-Conductor Wire - 4 Ga. - 16'	*1800220
22	Hex Head Cap Screw - 1/2" x 4"	*1800852
23	Flat Washer - 1/2"	*1800996
24	Lock Nut - 1/2"	*1800995

*These items are NOT shown in the drawing.

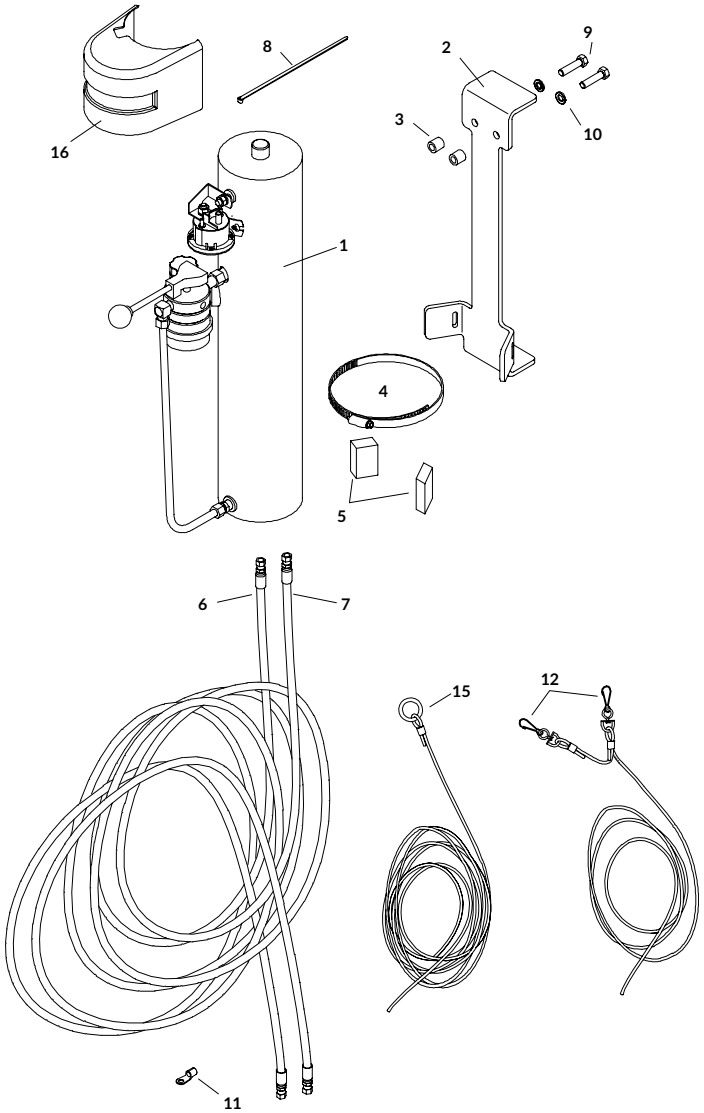

Table of Contents

Replacement Parts

SL BASE ASSEMBLIES AND HYDRAULICS

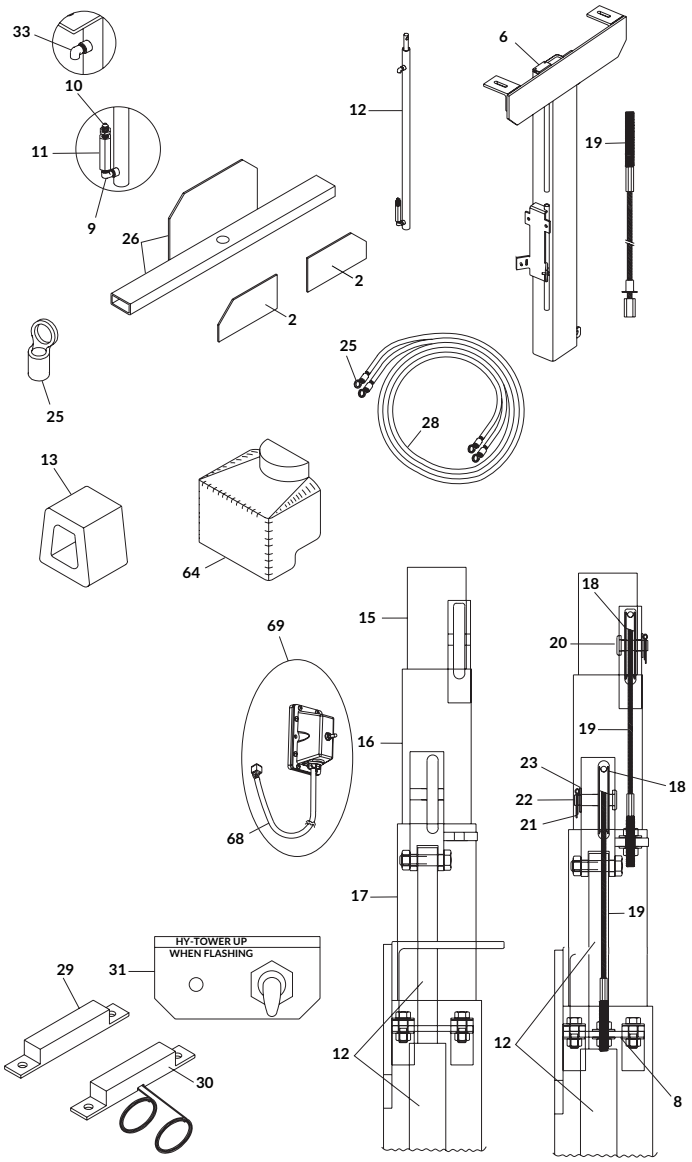

	DESCRIPTION	P/N
	Hy-Tower™ SL Base Kit w/Cylinder [Includes: A; 3; 5; 24; 26; 27; 28; 34; 41; 42; 43; 44; 46; 2 of 1, 2, 4, 35, 36, 37, 45, 47, 51, 52 & 65; 4 of 25, 38, 39 & 48; 8 of 50; 12 of 49; 16 of 40]	1801996
A	Hy-Tower™ SL Base Assy [Includes: A; 6; 8; 9; 10; 11; 12; 14; 33; 56; 57; 58; 59; 2 of 7, 13, 50, 53, 54 & 60; 3 of 61; 4 of 49 & 55]	*1801158
B	Alum Leg Assy [Includes: 15; 16; 17; 20; 22; 2 of 18, 19, 21, 23, 50, 54, 62 & 63; 4 of 55]	*1801445
	Hy-Tower™ SL Seal Kit	1801063
1	Nylon Insert - 6-32	*1800578
2	Front Brace	1800370
3	Hydraulic Pump - 12V - Hy-Tower™	*1809992
4	Male Hydraulic Fitting - #6 x 90°	*1800925
5	Circuit Breaker - 150 Amp	*1800458
6	Steel Leg Assy	1800369
7	Bumper Hold-Down	*1800392
8	Mounting Cable - Threaded End	1800393
9	Hydraulic Fitting - 4MP x 4MP x 90°	1800912
10	Hydraulic Fitting - 4MJ x 4MP x STR	1801017
11	Hydraulic Pressure Control Compensator - 1-3/4"	1801018
12	Hydraulic Cylinder - 1-14" x 40"	1801160
13	Dock Bumper - 3"	1801175
14	Hydraulic Hose - 37-1/2" OAL	*1801235
15	Alum Leg Assy - Inner	1800380
16	Alum Leg Assy - Medium	1800381
17	Alum Leg Assy - Outer	1800382
18	Pulley	1800394
19	Cable Assy	1801005
20	Clevis Pin - 1/2" x 1-1/4"	1801475
21	Cotter Pin - 1/8" x 1-1/4"	1801476
22	Clevis Pin - 1/2" x 1-3/4"	1801517
23	Shim - 1/2" ID x 7/8" OD x .075"	1801519
24	Alarm Audible Kit - 4"	*1801033
25	Ring Terminal - 4 Ga. x 3/8" Stud - Battery	1800158
26	Mounting Base	1801159
27	SL Box Base	*1801192
28	Dual-Conductor Wire - 4 Ga. - 16'	1800220
29	Single Magnet Sensor - 4"	1801356
30	Single Magnet Sensor w/Wire - 4"	1801357
31	Alarm Cut-Off Switch Assy	1801358
32	Toggle Switch Assy	*1801725
33	Hydraulic Fitting - 4JIC x 1/4NPT x MI90	1800112
34	Switch Bracket	*1811460
35	Lock Washer - 3/8"	*1800991
36	Hex Head Cap Screw - 3/8" x 1-1/4"	*1811464
37	Flat Washer - 1/4"	*1800784
38	Hex Lock Nut - 1/4"	*1800699
39	Carriage Bolt - 1/4" x 3/4" - GR5	*1705597
40	Self-Tapping Screw - #10-24 x 1-1/2"	*1809472
41	Rubber Grommet - 1-1/2" Insert	*1202938
42	Pump Enclosure - Top Panel	*1811736
43	Pump Enclosure - Front Panel	*1811735
44	Pump Enclosure - Rear Panel	*1811734
45	Carriage Bolt - 1/2" x 1-1/2"	*1800356
46	Enclosure Mtg Bracket	*1811461
47	Button head Cap Screw - #6-32 x 3/4"	*1800577
48	Self-Drilling Screw - 1/4" x 3/4"	*1801224
49	Flat Washer - 1/2"	*1800996
50	Lock Nut - 1/2"	*1800995
51	Hex Head Cap Screw - 1/2" x 5"	*1800898
52	Hex Head Cap Screw - 1/2" x 4"	*1800852
53	Wire Ties, Black - 8"	*1800976
54	Lock Nut - 3/8"	*1800993
55	Flat Washer - 3/8"	*1800994
56	Hydraulic Hose - 84" OAL	*1801627

	DESCRIPTION	P/N
57	Hex Head Cap Screw - 3/4" x 2"	*1801469
58	Hex Jam Nut - 3/4"	*1801504
59	Hex Jam Nut - 1/2"	*1801341
60	Cap Screw - 3/8" x 1-1/2"	*1800790
61	Hex Head Cap Screw - 1/2" x 2-1/4"	*1801457
62	Flat Washer - 1/2"	*1800924
63	Hex Nut - 3/8"	*1800992
64	SL Solenoid Cover	1801342
65	Mounting Angle	*1801966
66	Solenoid - 12V - 4 Post	*1801343
67	Pump Cord - Fork End	*1801366
68	Driver Side Cord - Control Box End	1801365
69	Toggle Switch - Marine Grade	1801718
70	Coil - 12V	*1801367
71	Hydraulic Motor Cap - Breather	*1801363

*These items are NOT shown in the drawing: numbered for future reference.

SL HOUSING ASSEMBLIES

	DESCRIPTION	P/N
	Hy-Tower™ SL Housing Kit [Includes: A; B; C; 3; 4; 5; 6; 10; 11; 13; 14; 15; 2 of 16; 4 of 12]	1800483
A	Hy-Tower™ SL Housing Assy [Inlcudes: 1; 2; 6 of 9]	1800482
B	Rope Assy [Inlcudes: 7; 8]	1801009
C	Pull Bar Assy	1801463
1	Hy-Tower™ SL Housing wEnd Plates	1800481
2	Housing Deflector - 105-3/4"	1800477
3	Ratchet Spring	1800698
4	Ratchet Spacer	1800702
5	Ratchet Pawl w/Lever	1800917
6	Roller Bar - Hy-Tower™	1810381
7	Rope Assy w/o O-Ring - 3/8” x 52”	1801387
8	Rope Assy - 5/16" x 8'	1801388
9	Selt-Threading Bolt - 5/16" x 1-1/4"	*1800460
10	Hex Head Cap Screw - 3/8" x 1"	*1800795
11	Hex Head Cap Screw - 5/16" x 1-1/2"	*1800972
12	Wire Ties, Black - 8"	*1800976
13	Lock Nut - 5/16"	*1800990
14	Lock Nut - 3/8"	*1800993
15	Flat Washer - 3/8"	*1800994
16	Nylon Insert - 6-32	*1800578

*These items are NOT shown in the drawing.

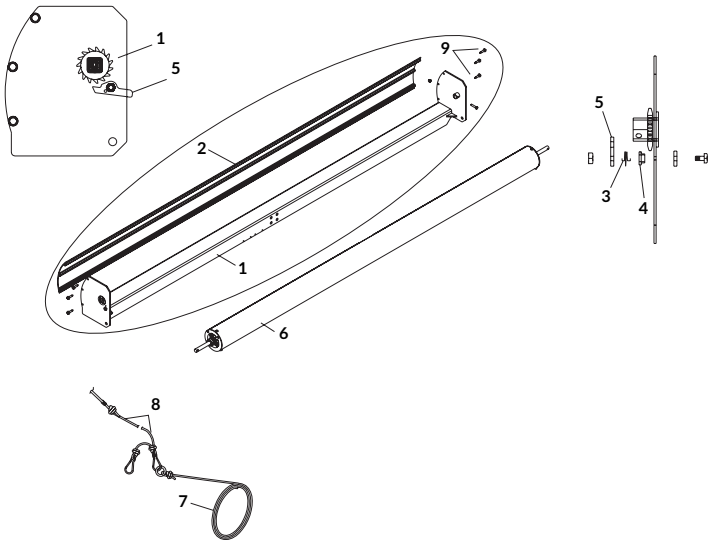

PULL BARS

	DESCRIPTION	P/N
	Pull Bar Assy [Includes: 1; 2; 5 of 3]	1800483
1	Composite Tube - 1" OD	1800482
2	Polyethylene Foam - 7/8"	1801463
3	Wire Ties, Black - 8"	*1800481

*These items are NOT shown in the drawing.

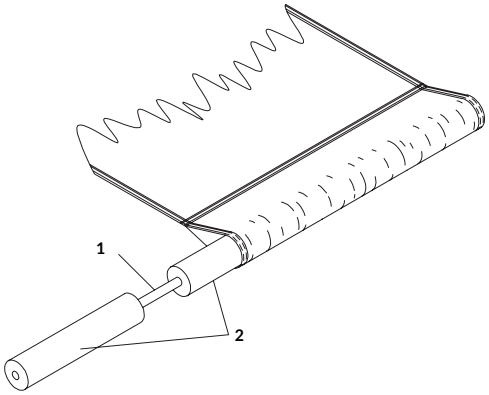

Table of Contents

Replacement Parts

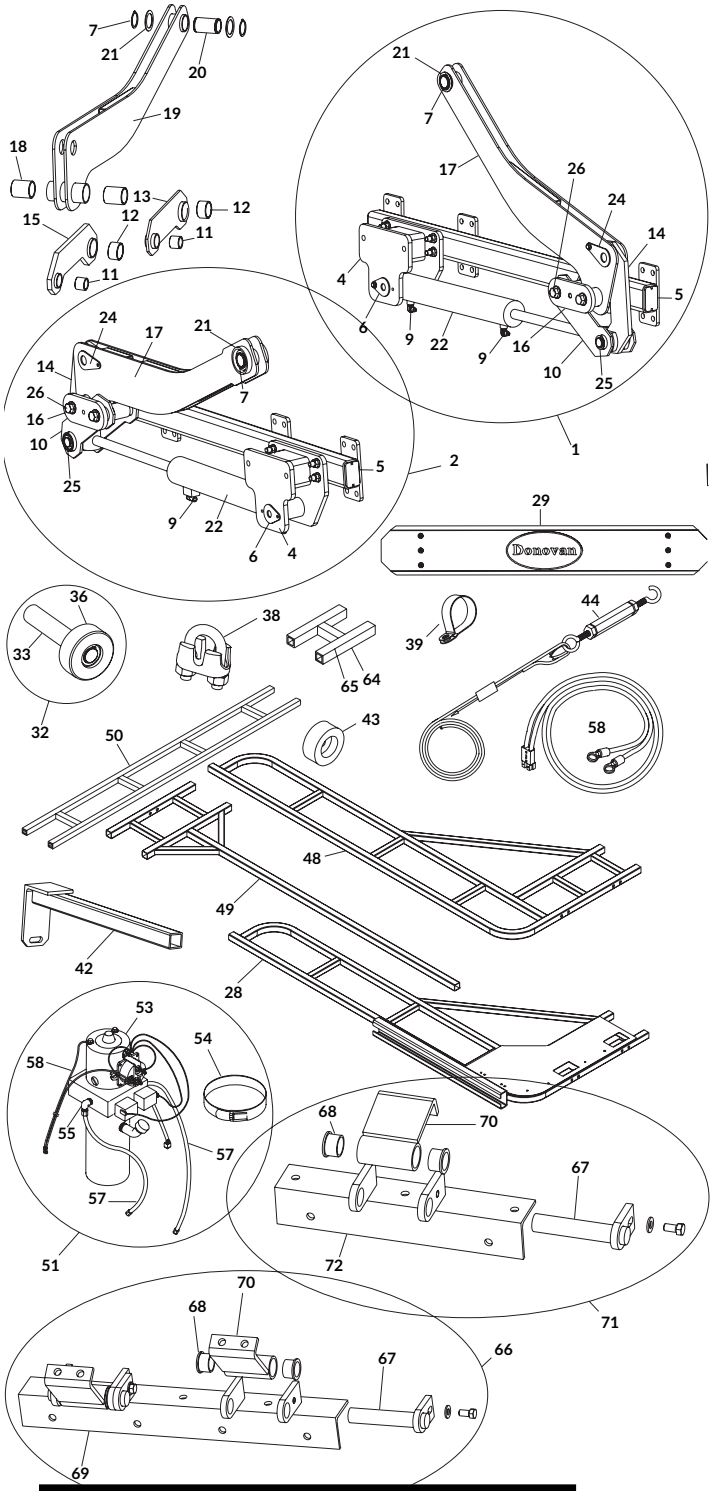

SIDEWINDER II

	DESCRIPTION	P/N
1	Backhoe Actual Assy - L Hinge [Includes 4; 5; 6; 14; 16; 17; 22; 23; 24; 25; 2 of 3, 7, 8, 9, 10, 26 & 27; 4 of 21]	1800286
2	Backhoe Actual Assy - R Hinge [Includes 4; 5; 6; 14; 16; 17; 22; 23; 24; 25; 2 of 3, 7, 8, 9, 10, 26 & 27; 4 of 21]	1801907
3	Gearlock Bearing	*1800276
4	Cylinder Mount	1800282
5	Base Tube Weldment	1800287
6	Cylinder Base Pin Assy	1800292
7	External Retaining Ring - 1-1/2" Dia.	1800880
8	External Retaining Ring - 1" Dia.	*1801707
9	Hydraulic Fitting - 4JIC x 1/4NPT x MI90	1800112
10	Short Link Assy [Includes 11; 12; 13]	1800180
11	Bushing - 1" ID x 1-1/4 OD x 1"	1800497
12	Bushing - 1-1/2" ID x 1-3/4" OD x 1"	1800879
13	Short Link	1800181
14	Long Link w/Bushing [Includes 11; 12; 15]	1800190
15	Long Link	1800191
16	Pin Connector	1800194
17	Rotating Arm Assy [Includes 19; 20; 2 of 7, 18 & 21]	1800197
18	Bushing - 1-1/2" ID x 1-3/4" OD x 2"	1800156
19	Rotating Arm	1800199
20	Bushing - Turned	1800203
21	Shim - 1-1/2" ID x .047"	1800204
22	Hydraulic Cylinder - 2-1/2" x 15-1/4"	1800205
23	Short Link Spacer	*1800207
24	Long Link Pin	1800208
25	Long/Short Link Pin	1800211
26	Hex Bolt w/Serrated Washer - 5/8" x 1-1/2"	1800232
27	Shim - 1" ID x 1-1/2" OD x .047"	*1800250
28	Front Lid Assy	1800289
29	Wind Deflector	1800293
30	Deflector Brace - 1-1/2"	*1800294
31	Deflector Brace - 1"	*1800295
32	Roller Shaft Assy - 10" [Includes 33; 34; 35; 36; 2 of 27]	1800335
33	Roller Shaft	1800331
34	Shim - 1-1/4" ID x .047	*1800977
35	Retaining Ring - 1-1/4"	*1800978
36	Roller - UMHW	1800177
37	Stainless Button Head Screw - 1/2" x 3"	*1800374
38	Cable Nut - 3/16"	1800872
39	Loop Strap - 3/4"	1800923
40	Loctite - 5 ML	*1801379
41	Bumper Strips - UHMW	*1801510
42	Center Lid Extension	1800897
43	Rubber Bumper - 1-1/2" Round	1801236
44	Cable w/Turnbuckle - 30'	1801276
45	Hy-Tower™ SL Solenoid Cover	*1801342
46	Hose Clamp - 4-1/16" x 5"	*1801495
47	Pump Mount Bracket	*1800412
48	Rear Lid Assy	1800884
49	Center Lid Assy	1800885
50	Ladder Assy	1800889
51	Pump Assy - 12V [Inc. 52; 53; 54; 58; 2 of 43, 55, 56 & 57]	1800945
52	Circuit Breaker - 150 Amp	*1800458
53	Hydraulic Pump w/Enclosure - 12V	1810310
54	Clamp - 5" to 7"	1800906
55	Male Hydraulic Fitting - #6 x 90°	1800925
56	Stud - 3/8" x 2-5/8"	*1800926
57	Hydraulic Hose - 37-1/2" OAL	1801235
58	Wiring Harness - 9' [Includes 59; 61; 2 of 60]	1801237
59	Connector - 120 Amp - 4 Ga.	*1800149
60	Ring Terminal - 4 Ga. x 3/8" Stud - Battery	*1800158
61	Dual-Conductor Wire - 4 Ga. - 9'	*1800221

	DESCRIPTION	P/N
62	Wiring Harness - 16' [Includes 59; 63; 2 of 60]	1801238
63	Dual-Conductor Wire - 4 Ga. - 16'	*1800220
64	4H Connectors [Includes 4 of 65]	*1801233
65	Connector - H	1800891
66	Front & Rear Hinge Assy - Low Profile [Includes 69; 2 of 67 & 70; 4 of 68]	1801599
67	Hinge Pin Assy	1800606
68	Flanged Bushing - 1-14" ID	1800860
69	Rear Hinge - Low Profile	1801600
70	Hinge Lid - Low Profile	1801603
71	Center Hinge Assy - Low Profile [Includes 67; 70; 72; 2 of 68]	1801601
72	Center Hinge - Low Profile	1801602
73	Hose Bundling Wrap - 1/2"	*1800315
74	External Retaining Ring - 1" Dia. x .078"	*1808766
75	Sidewinder™ Wet Kit	*1801430

*These items are NOT shown in the drawing.

SIDEWINDER 350

	DESCRIPTION	P/N
1	Backhoe Actual Assy - L Hinge [Includes 4; 5; 6; 14; 16; 17; 22; 23; 24; 25; 2 of 3, 7, 8, 9, & 10; 4 of 21]	1800286
2	Backhoe Actual Assy - R Hinge [Includes 4; 5; 6; 14; 16; 17; 22; 23; 24; 25; 2 of 3, 7, 8, 9, & 10; 4 of 21]	1801907
3	Gearlock Bearing	*1800276
4	Cylinder Mount	*1800282
5	Base Tube Weldment	*1800287
6	Cylinder Base Pin Assy	1800292
7	External Retaining Ring - 1-1/2" Dia.	1800880
8	External Retaining Ring - 1" Dia.	*1801707
9	Hydraulic Fitting - 4JIC x 1/4NPT x MI90	1800112
10	Short Link Assembly [Includes 11; 12; 13]	1800180
11	Bushing - 1" ID x 1-1/4 OD x 1"	1800497
12	Bushing - 1-1/2" ID x 1-3/4" OD x 1"	1800879
13	Short Link	1800181
14	Long Link w/Bushing [Includes 11; 12; 15]	1800190
15	Long Link	1800191
16	Pin Connector	1800194
17	Rotating Arm Assy [Includes: 19; 20; 2 of 7, 18 & 21]	1800197
18	Bushing - 1-1/2" ID x 1-3/4" OD x 2"	1800156
19	Rotating Arm	*1800199
20	Bushing - Turned	1800203
21	Shim - 1-1/2" ID x .047"	1800204
22	Hydraulic Cylinder - 2-1/2" x 15-1/4"	1800205
23	Short Link Spacer	*1800207
24	Long Link Pin	1800208
25	Long/Short Link Pin	*1800211
26	Wind Deflector	1800293
27	Front I-Beam - 91.88"	1800796
28	I-Beam - 94.83"	1800800
29	Rear Lid Assy	*1800831
30	Front Lid Assy	*1800824
31	Rear I-Beam - 91.88"	1800837
32	Latch Pipe	1800867
33	Roller Shaft Assy - 10" [Includes 34; 35; 83; 84; 85; 2 of 86]	1800335
34	Roller Shaft	1800331
35	Roller - UMHW	1800177
36	Pump Mount Bracket	*1800412
37	Hinge Angle	*1800781
38	Front Hinge	1800789
39	Rear Hinge	1800794
40	I-Beam - 15.38"	*1800804
41	Reinforcement Plate	1800805
42	Angled T Plate	*1800816
43	T Plate	1800817
44	Roller Track	1800818
45	Roller Track Support Tube	1800822
46	Lid Extension	1800825
47	Deflector Brace - 1-1/2"	*1800294
48	Deflector Brace - 1"	*1800295
49	EPDM Rubber Strap - 15"	*1702160
50	Latch Mount	1800838
51	Bronze Thrust Bearing - 1"	*1800853
52	Turnbuckle - 5/16"	1800858
53	Aluminum Turnbuckle - 3/8"	*1800859
54	Top Hold-Down Plate	1800865
55	Hook	1800866
56	Latch Handle	1800868
57	Handle Gusset	1800869
58	Rubber Bumper - 1-1/2" Round	1801236
59	Hose Clamp - 4-1/16" x 5"	*1801495
60	Galvanized Cable - 3/16" x 55'	1800857
61	Large Reinforcement Plate	1800883
62	Large Angled T Plate	1800893
63	Large T Plate	1800896

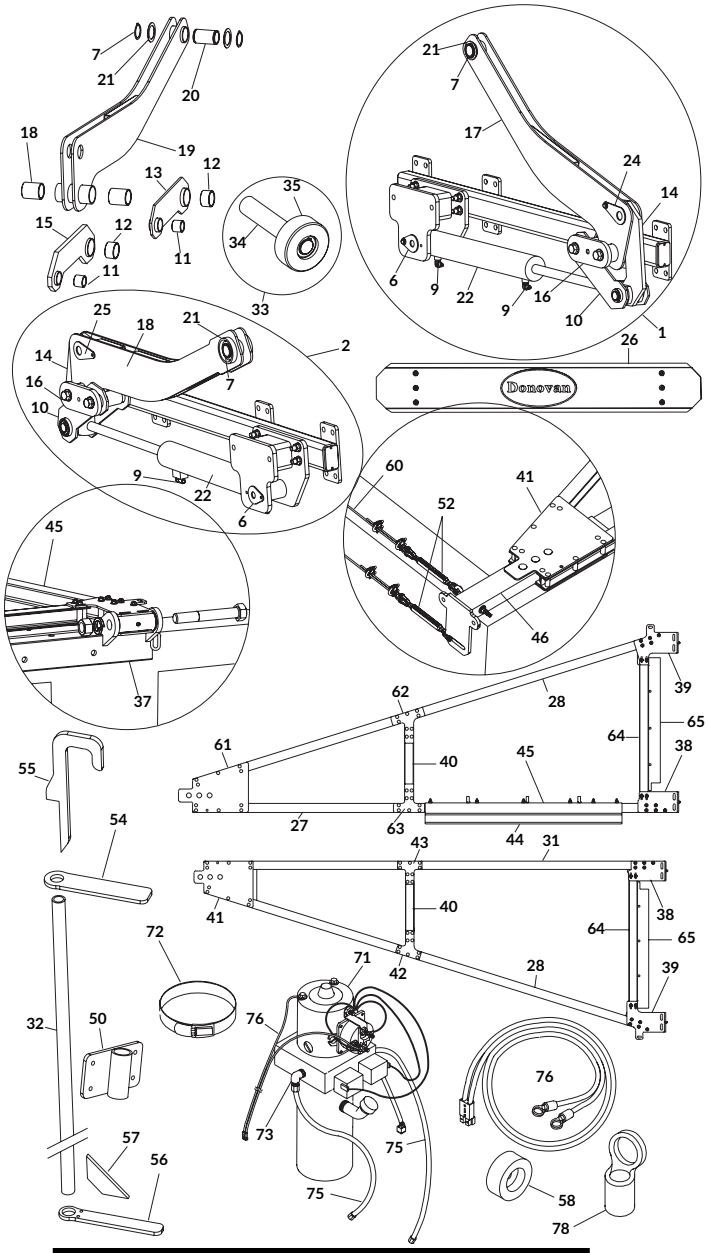

	DESCRIPTION	P/N
64	I-Beam - 28.25"	1800899
65	Hinge Seal	1800908
66	Aqua-Grade Tarp Reinforcement	*1800922
67	Hy-Tower™ SL Solenoid Cover	*1801342
68	Rear Lid Seal	*1800905
69	Pump Assy - 12V [Includes 70; 71; 72; 76; 80; 2 of 58, 73, 74 & 75]	*1800945
70	Circuit Breaker - 150 Amp	*1800458
71	Hydraulic Pump w/Enclosure - 12V- Sidwinder™	1810310
72	Clamp - 5" to 7"	1800906
73	Male Hydraulic Fitting - #6 x 90°	1800925
74	Stud - 3/8" x 2-5/8"	*1800926
75	Hydraulic Hose - 37-1/2" OAL	1801235
76	Wiring Harness - 9' [Includes 77; 79; 2 of 78]	1801237
77	Connector - 120 Amp - 4 Ga.	1800149
78	Ring Terminal - 4 Ga. x 3/8" Stud - Battery	1800158
79	Dual-Conductor Wire - 4 Ga. - 9'	*1800221
80	Wiring Harness - 16' [Includes 77; 81; 2 of 78]	*1801238
81	Dual-Conductor Wire - 4 Ga. - 16'	*1800220
82	Connector - 120 Amp - 6 Ga.	*1801352
83	Shim - 1-1/4" ID x .047	*1800977
84	Retaining Ring - 1-1/4"	*1800978
85	External Retaining Ring - 1" Dia. x .078"	*1808766
86	Shim - 1" ID x 1-1/2" OD x .047"	*1800250
87	Backhoe Actual Assembly - Right Hinge	*1801907

DOUBLE-FLIP

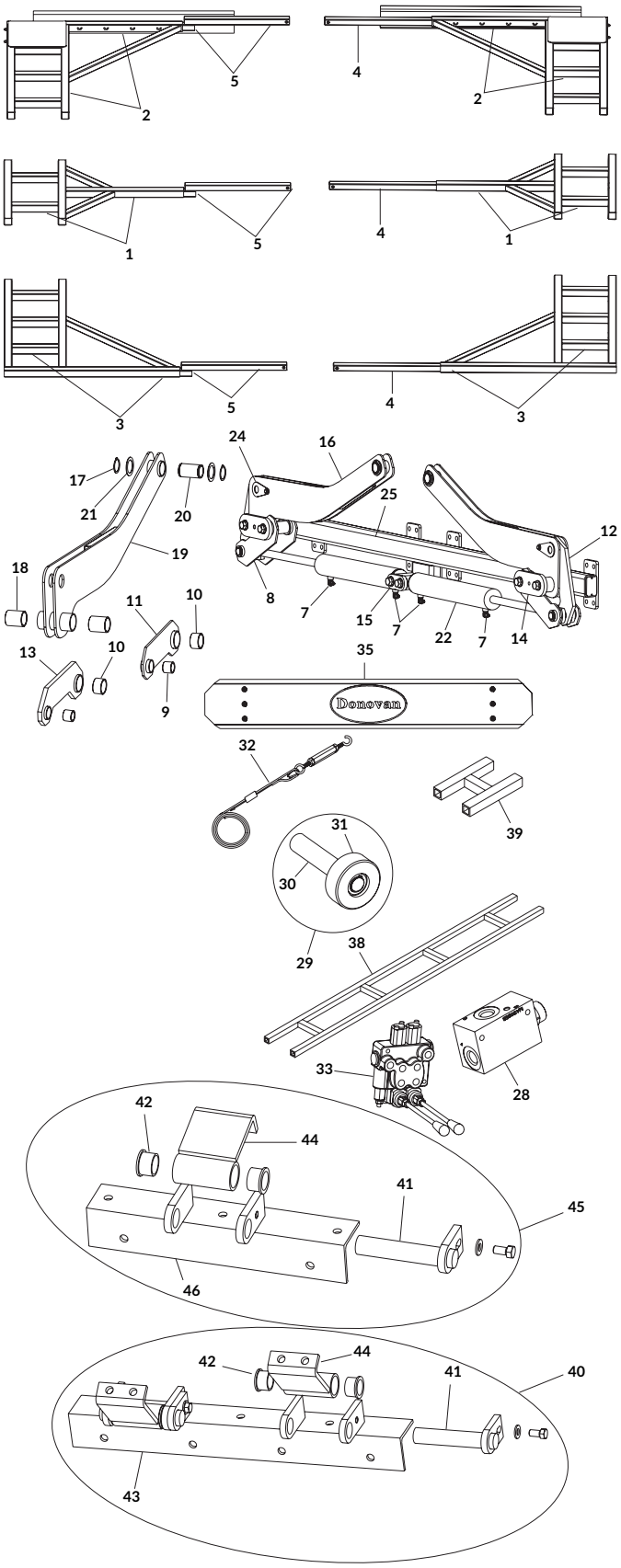

	DESCRIPTION	P/N
1	Center Lid Weldment	1800162
2	Front Lid Weldment	1800164
3	Rear Lid	1800166
4	Insert Tube - 28"	1800173
5	Lid Extension	1800174
6	Backhoe Actuator Assy	1800189
7	Hydraulic Fitting - 4JIC x 1/4NPT x MI90	1800112
8	Short Link Assy	1800180
9	Bushing - 1" ID x 1-1/4 OD x 1"	1800497
10	Bushing - 1-1/2" ID x 1-3/4" OD x 1"	1800879
11	Short Link	1800181
12	Long Link w/Bushing	1800190
13	Long Link	1800191
14	Pin Connector	1800194
15	Cylinder Pin Connector	1800195
16	Rotating Arm Assy	1800197
17	External Retaining Ring - 1-1/2" Dia.	1800880
18	Bushing - 1-1/2" ID x 1-3/4" OD x 2"	1800156
19	Rotating Arm	1800199
20	Bushing - Turned	1800203
21	Shim - 1-1/2" ID x .047"	1800204
22	Hydraulic Cylinder - 2-1/2" x 15-1/4"	1800205
23	Short Link Spacer	*1800207
24	Long Link Pin	1800208
25	Base Tube Weldment	1800209
26	Long/Short Link Pin	*1800211
27	Gearlock Bearing	*1800276
28	Priority Control - 1-1/2 GPM	1800265
29	Roller Shaft Assy - 10"	1800335
30	Roller Shaft	1800331
31	Roller - UMHW	1800177
32	Cable w/Turnbuckle - 30'	1801276
33	Manual Valve - 2 Spool RV	1801706
34	Deflector Brace - 1"	*1800295
35	Wind Deflector	1800231
36	Long Tarp Strip	*1800247
37	Short Tarp Strip	*1800248
38	Center Lid Assy	1800889
39	Connector - H	1800891
40	Front & Rear Hinge - Low Profile	1801599
41	Hinge Pin Assy	1800606
42	Flanged Bushing - 1-14" ID	1800860
43	Rear Hinge - Low Profile	1801600
44	Hinge Lid - Low Profile	1801603
45	Center Hinge Assy - Low Profile	1801601
46	Center Hinge - Low Profile	1801602
47	Shim - 1-1/4" ID x .047	*1800977
48	Retaining Ring - 1-1/4"	*1800978
49	External Retaining Ring - 1" Dia. x .078"	*1808766
50	Shim - 1" ID x 1-1/2" OD x .047"	*1800250

*These items are NOT shown in the drawing.

Table of Contents

Replacement Parts

*These items are NOT shown in the drawing: numbered for future reference.

CRANK ARMS - SHUR-FLEX™

	DESCRIPTION	P/N
	KITS & HARDWARE	
	Shur-Flex™ Crank Arm Kit - 80" Extension [Includes: D; F; 1; 12]	1102782
	Shur-Flex™ Crank Arm Kit - 96" Extension [Includes: D; F; 1; 12]	1105176
A	Offset Crank Retainer Kit [Includes: E; 14]	1101929
B	Offset Pinless Crank Retainer Kit [Includes: C; 14]	1114603
C	Offset Pinless Retainer Conversion Kit [Includes: 16; 17; 18; 19; 20; 21; 22; 23; 24]	1114602
D	Shur-Flex™ Crank Extension - 80" [Includes: 3; 5; 6; 9]	1117752
	Shur-Flex™ Crank Extension - 96" [Includes: 3; 5; 6; 9]	1105047
E	Offset Crank Retainer Hdw [Includes: 2; 15; 2 of 16, 17 & 18]	1107062
F	Shur-Lok® Crank Hdw [Includes: 8; 10; 16; 17]	1105305
	PARTS	
1	Splined U-Joint	1701243
2	Wire Lock Pin - 3/8" x 2-1/2"	1700526
3	Lock Tube - 5-1/2"	1101924
4	Spring Pin - 3/8" x 2"	1700443
5	Shur-Flex™ Crank Extension - 80"	1117753
	Shur-Flex™ Upper Crank Extension - 96"	1105049
6	Spring Pin - 1/4" x 1-3/16"	1701118
7	Male Knuckle w/Pin	1122522
8	Female Knuckle w/Pin	1122523
9	Lower Extension - 20"	1102691
10	Centerlock Hex Nut - 3/8"	1700418
11	Hex Head Cap Screw - 3/8" x 1-3/4"	1700369
12	Standard Crank Arm - 24"	1100171
13	Operating Decal	1100362
14	Offset J-Hook Crank Retainer	1101930
15	Cable w/#5 Interlock Snap	1100574
16	Self-Tapping Screw - 3/8" x 1"	1700400
17	Lock Washer - 3/8"	1700434
18	Hex Nut - 3/8"	1700407
19	Offset Pinless Crank Retainer Base Plate	1114599
20	Clevis Pin - 5/16" x 1-3/4"	1703133
21	Tension Spring	1703134
22	Bowtie Cotter Pin - 1-3/8"	1704380
23	Flat Washer - 1/4"	1700427
24	Offset Pinless Crank Retainer Lock	1114600
25	Crank Handle (handle - washer - nut)	1116110

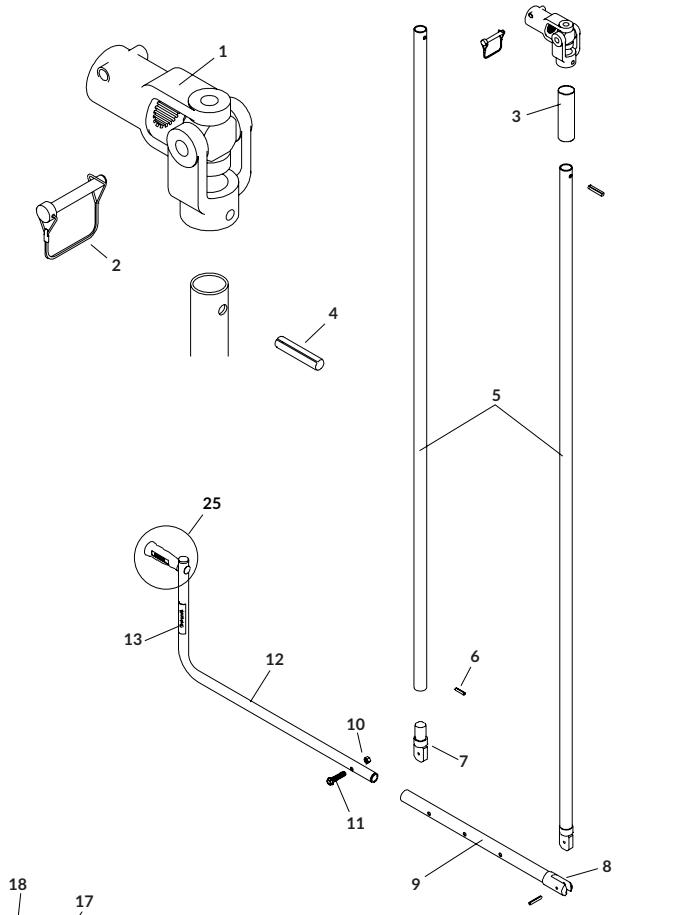

CRANK ARMS - STANDARD

	DESCRIPTION	P/N
	KITS & HARDWARE	
	Standard Crank Kit - 96" Extension [Includes: A; 1; 4; 6]	1122845
	Long Crank Kit - 80" Extension [Includes: A; 1; 4; 6]	1100813
A	Shur-Lok® Crank Hdw [Includes: 2; 3; 5; 8]	1105305
	PARTS	
1	Splined U-Joint	1701243
2	Wire Lock Pin - 3/8" x 2-1/2"	1700526
3	Spring Pin - 3/8" x 2"	1700443
4	Crank Extension - 96"	1106449
	Crank Extension - 80"	1100028
5	Hex Head Cap Screw - 3/8" x 1-3/4"	1700369
6	Standard Crank Arm - 24"	1100171
	Long Crank Arm - 60"	1100069
7	Operating Decal	1100362
8	Centerlock Hex Nut - 3/8"	1700418
9	Crank Handle (handle - washer - nut)	1116110

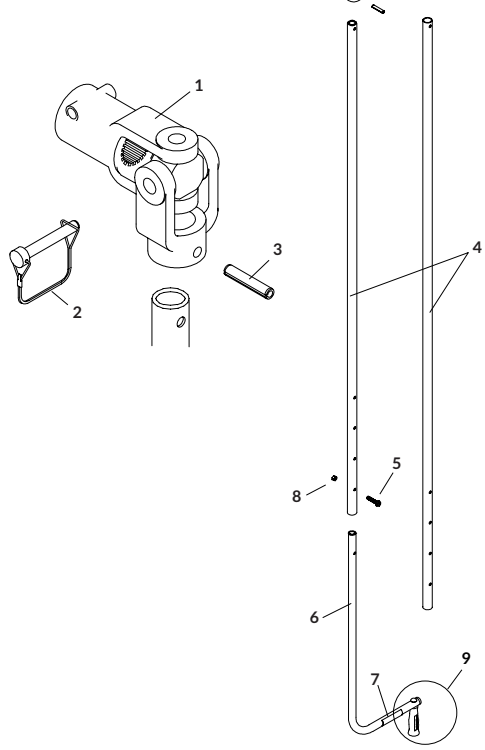

USE W/BELT 'N RATCHET - CRANK ARMS - STANDARD

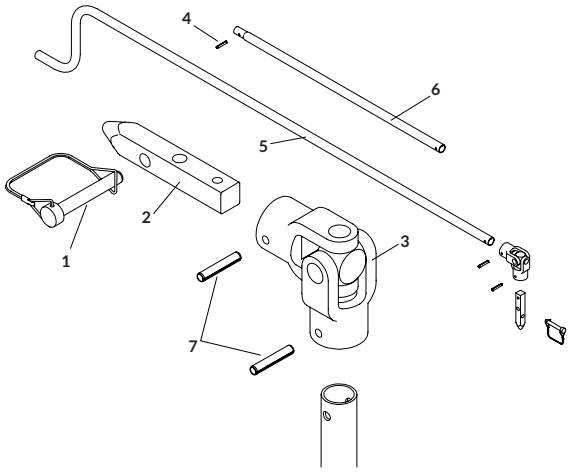

	DESCRIPTION	P/N
	KITS & HARDWARE	
	Standard Belt 'N Ratchet Crank Arm Kit [Includes: A; 3; 5]	*1100061
	Long Belt 'n Ratchet Crank Arm Kit [Includes: A; 3; 5; 6]	*1101500
A	Belt 'N Ratchet Crank Hdw [Includes: 2; 7; 2 of 4]	1115970
	PARTS	
1	Wire Lock Pin - 3/8" x 2-1/2"	1700526
2	Pilot Crank Key	1115774
3	Econo U-Joint	1700527
4	Spring Pin - 1/4" x 1-1/2"	1700445
5	Offset Crank Arm	1100461
6	Square Crank Extension - 33"	1107838
7	Spring Pin - 1/4" x 1-3/16"	1701118

*Leave-on crank option requires wire lock pin (2), sold separately.

BOWS - GALVANIZED STEEL STANDARD

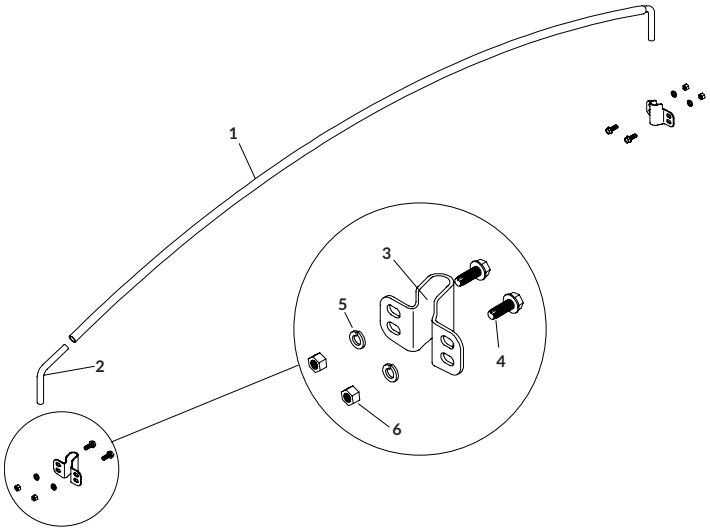

	DESCRIPTION	P/N
	KITS & HARDWARE	
	Galvanized Bow Kit - 8" Rise - 78" to 84" [Includes: A; 1; 2; 2 of 3]	1117915
	Galvanized Bow Kit - 8" Rise - 85" to 92" [Includes: A; 1; 2; 2 of 3]	1117916
	Galvanized Bow Kit - 8" Rise - 93" to 102" [Includes: A; 1; 2; 2 of 3]	1100766
	Galvanized Bow Shank & Bracket Kit - 8" Rise [Includes: A; 2; 2 of 3]	1101608
A	Mounting Fasteners (4) [Includes: 4 of 4, 5 & 6]	1107711
	PARTS	
1	Galv Bow - 8" Rise - 78" to 84"	1117904
	Galv Bow - 8" Rise - 85" to 92"	1116120
	Galv Bow - 8" Rise - 93" to 102"	1100760
2	Galv Bow Shank - 8" Rise	1100695
3	Single Bow Bracket	1120836
4	Self-Tapping Screw - 3/8" x 1"	1700400
5	Lock Washer - 3/8"	1700434
6	Hex Nut - 3/8"	1700407

CRANK RETAINERS

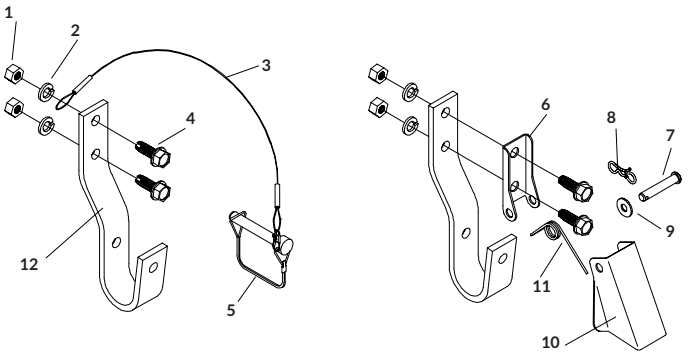

	DESCRIPTION	P/N
	KITS & HARDWARE	
	Offset Crank Retainer Kit [Includes: B; 12]	1101929
	Offset Pinless Crank Retainer Kit [Includes: A; 12]	1114603
A	Offset Pinless Retainer Conversion Kit [Includes: 6; 7; 8; 9; 10; 11; 2 of 1, 2 & 4]	1114602
B	Offset Crank Retainer Hdw [Includes: 3; 5; 2 of 1, 2 & 4]	1107062
C	Mounting Fasteners (10) [Includes: 10 of 1, 2 & 4]	1119159
	PARTS	
1	Hex Nut - 3/8"	1700407
2	Lock Washer - 3/8"	1700434
3	Cable w/#5 Interlock Snap	1100574
4	Self-Tapping Screw - 3/8" x 1"	1700400
5	Wire Lock Pin - 3/8" x 2-1/2"	1700526
6	Offset Pinless Crank Retainer Base Plate	1114599
7	Clevis Pin - 5/16" x 1-3/4"	1703133
8	Bowtie Cotter Pin - 1-3/8"	1704380
9	Flat Washer - 1/4"	1700427
10	Offset Pinless Crank Retainer Lock	1114600
11	Tension Spring	1703134
12	Offset J-Hook Crank Retainer	1101930

Table of Contents

Replacement Parts

END CAPS - ALUMINUM

	DESCRIPTION	P/N
	HARDWARE	
A	Mounting Fasteners (7) [Includes: 10 of 1, 2 & 4]	1107787
	PARTS	
1	Self-Tapping Screw - 3/8" x 1"	1700400
2	Lock Washer - 3/8"	1700434
3	Hex Nut - 3/8"	1700407
4	Rubber Windshield (per foot)	1701238
	FRONT CAP	
5	Alum SQ Front - Flat x 10" x 96"	1107422
	Alum SQ Front - Flat x 10" x 101.50"	1107510
	BACK CAP	
6	Alum SQ Back - Flat x 10" x 96"	1107421
	Alum SQ Back - Flat x 10" x 101.50"	1107512

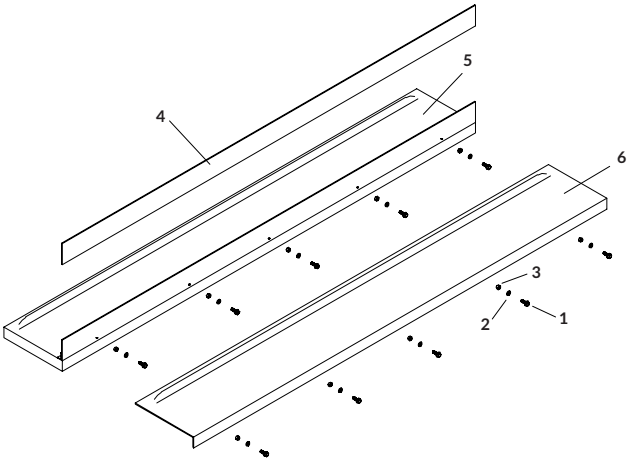

END CAPS - FABRIC BACK

	DESCRIPTION	P/N
	KITS & HARDWARE	
	Single Back Std Fabric Cap Bow Kit - 8" Rise [Includes: A; 1; 6; 2 of 2 & 16; 6 of 12]	1100640
	Single Back Std Fabric Cap Bow Kit - 12" Rise [Includes: A; 1; 6; 2 of 2 & 16; 6 of 12]	1100639
	Single Back HD Fabric Cap/Flap Bow Kit - 8" Rise [Includes: 7; 9; 2 of 8, 10, 11 & 16; 6 of 3, 4, 5, 12, 13, 14 & 15]	1102903
	Single Back HD Fabric Cap/Flap Bow Kit - 12" Rise [Includes: 7; 9; 2 of 8, 10, 11 & 16; 6 of 3, 4, 5, 12, 13, 14 & 15]	1102829
A	Fabric Cap Hdw [Includes: 4 of 3, 4 & 5; 6 of 13, 14 & 15]	1105303
	PARTS	
1	Galv Bow - 8" Rise - 93" to 102"	1100760
	Galv Bow - 12" Rise - 96" to 102"	1100762
2	Single Bow Bracket	1120836
3	Self-Tapping Screw - 3/8" x 1"	1700400
4	Hex Nut - 3/8"	1700407
5	Lock Washer - 3/8"	1700434
6	Galv Bow Shank - 8" Rise	1100695
	Galv Bow Shank - 12" Rise	1106925
7	Heavy-Duty Bow - 8" Rise	1106612
	Heavy-Duty Bow - 12" Rise	1101927
8	Heavy-Duty Bow Pin	1104123
9	Heavy-Duty Bow Shank	1104706
10	Heavy-Duty Bow Bracket	1106614
11	Lynch Pin - 5/16" x 1-3/4"	1701098
12	Bungee Cord - 18"	1700990
13	Rope Anchor	1701355
14	Self-Tapping Screw - 5/16" x 1"	1701059
15	Nylon Lock Hex Nut - 5/16"	1700419
16	Alum Flat Bar - 103"	1700581
	FABRIC INSERT ONLY	
17	Square Fabric Back - 96"	
	Square Fabric Back - 102"	
	FABRIC FLAP INSERT ONLY	
18	Dump Fabric Flap - 96"	
	Dump Fabric Flap - 102"	

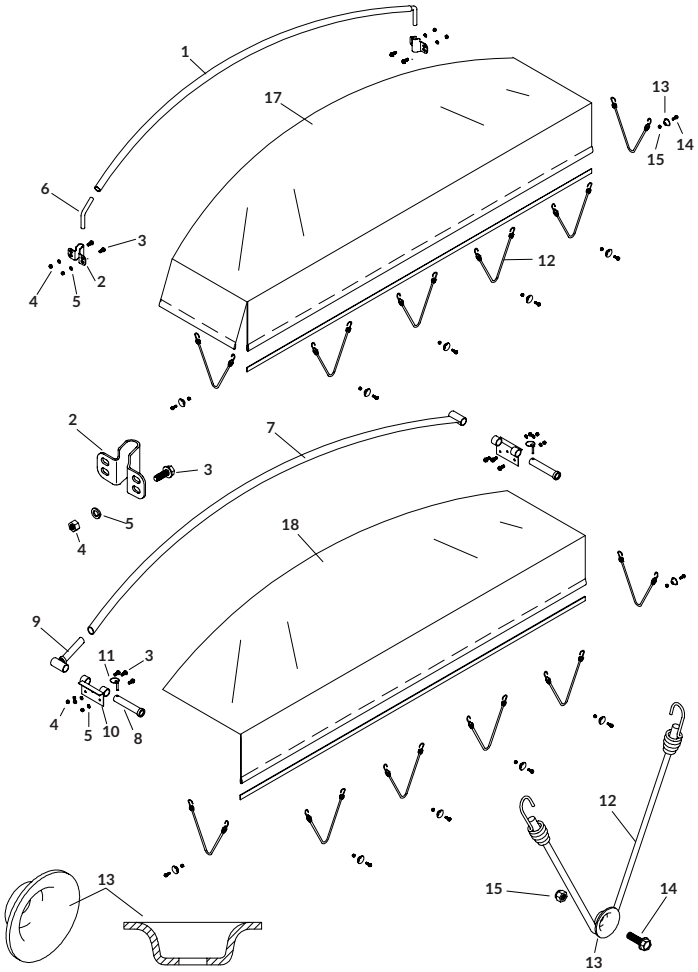

Table of Contents

Replacement Parts

END CAPS - FABRIC FRONT

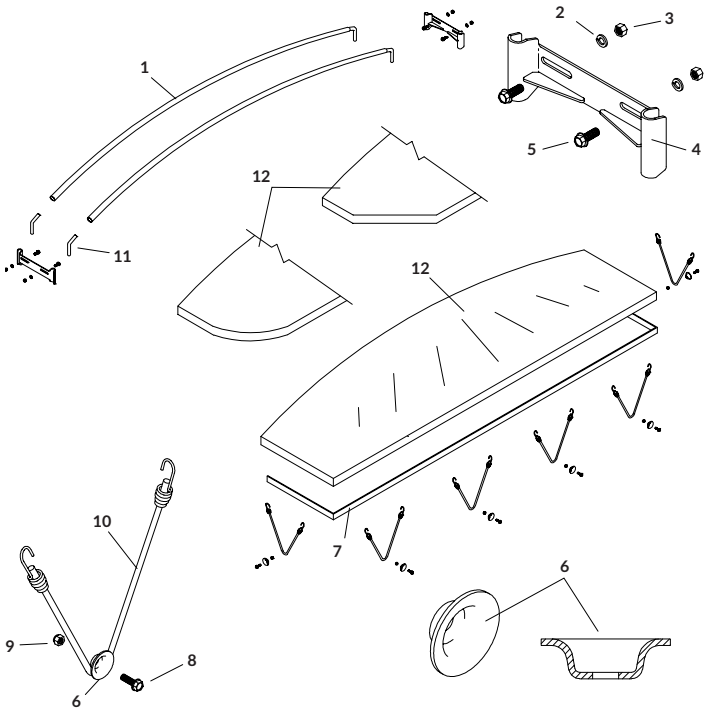

	DESCRIPTION	P/N
	KITS & HARDWARE	
	Double Front Fabric Cap Bow Kit - 8" Rise [Includes: A; 2 of 1, 4, 7 & 11; 6 of 10]	1100642
	Double Front Fabric Cap Bow Kit - 12" Rise [Includes: A; 2 of 1, 4, 7 & 11; 6 of 10]	1100641
A	Fabric Cap Hdw [Includes: 4 of 2, 3 & 5; 6 of 6, 8 & 9]	1105303
	PARTS	
1	Galv Bow - 8" Rise - 93" to 102"	1100760
	Galv Bow - 12" Rise - 96" to 102"	1100762
2	Lock Washer - 3/8"	1700434
3	Hex Nut - 3/8"	1700407
4	Double Bow Bracket	1108211
5	Self-Tapping Screw - 3/8" x 1"	1700400
6	Rope Anchor	1701355
7	Alum Flat Bar - 103"	1700581
8	Self-Tapping Screw - 5/16" x 1"	1701059
9	Nylon Lock Hex Nut - 5/16"	1700419
10	Bungee Cord - 18"	1700990
11	Galv Bow Shank - 8" Rise	1100695
	Galv Bow Shank - 12" Rise	1106925
	FABRIC INSERT ONLY	
12	Square Fabric Front - 96"	
	Square Fabric Front - 102"	
	Radius/Diagonal Fabric Front - 96"	
	Radius/Diagonal Fabric Front - 102"	

USE W/BELT 'N RATCHET - HOLD-DOWNS

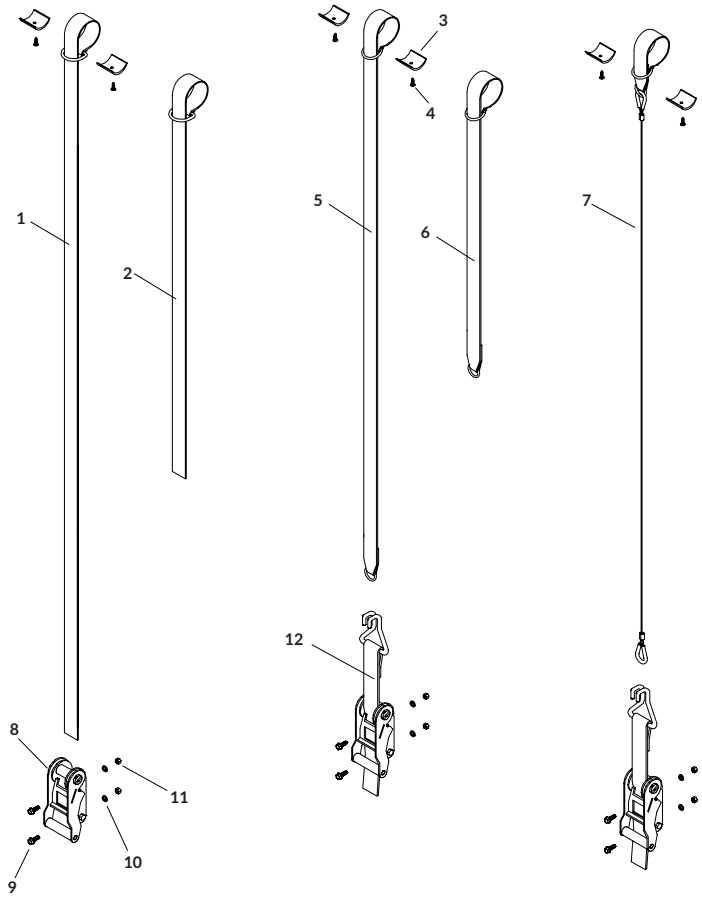

	DESCRIPTION	P/N
	KITS & HARDWARE	
	Cable Hold-Down Kit - 7' [Includes: A; 8; 7; 12]	1106770
	Strap Hold-Down Kit - 5' [Includes: A; 8; 7; 12]	1106771
	Strap Hold-Down Kit - 9' [Includes: A; 8; 7; 12]	1106772
	Strap Hold-Down Kit w/Hook - 5' [Includes: A; 6; 8; 12]	1107224
	Strap Hold-Down Kit w/Hook - 7' [Includes: A; 6; 8; 12]	1107225
	U-Clamp Kit 2" - (3) [Includes: 3 of 3 & 4]	1115966
	U-Clamp Kit 2" - (8) [Includes: 8 of 3 & 4]	1118643
	U-Clamp Kit 2" - (10) [Includes: 10 of 3 & 4]	1118644
	U-Clamp Kit 2" - (14) [Includes: 14 of 3 & 4]	1118663
A	Mounting Fasteners (2) [Includes: 2 of 9, 10 & 11]	1118592
	PARTS	
1	Strap Assy - 9'	1106774
	Strap Assy - 10'	1110337
2	Strap Assy - 5'	1100470
3	Plastic U-Clamp	1701354
4	Self-Drilling Screw - 1/4" x 3/4"	1700398
5	Wire Hook Strap Assy - 7'	1107223
6	Wire Hook Strap Assy - 5'	1107222
7	Cable Assy - 7'	1106763
8	Ratchet - 2"	1100457
9	Self-Tapping Screw - 3/8" x 1"	1700400
10	Lock Washer - 3/8"	1700434
11	Hex Nut - 3/8"	1700407
12	Web Assy w/Hook	1106754

LATCHPLATES

	DESCRIPTION	P/N
	PARTS	
1	Alum Top Mount Latchplate - 4'	1100370
	Alum Top Mount Latchplate - 6'	1100369
	Alum Top Mount Latchplate - 8'	1100368
2	Alum Side Mount Latchplate - 4'	1100749
	Alum Side Mount Latchplate - 6'	1700802
	Alum Side Mount Latchplate - 8'	1700522
3	Self-Tapping Screw - 3/8" x 1"	1700400

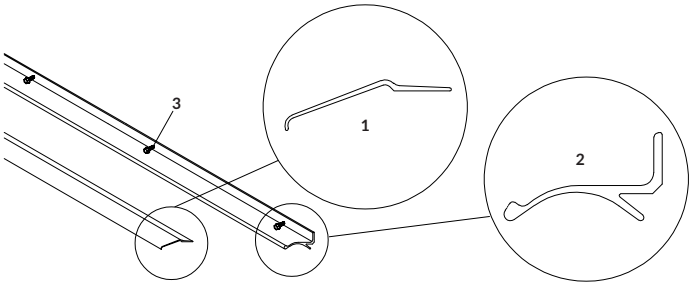

RETURNS - FRONT | REAR CABLE

	DESCRIPTION	P/N
	KITS & HARDWARE	
	Rear Cable Return Kit [Includes A; 1; 3; 5; 6; 9; 10; 11; 17; 19; 2 of 12, 16 & 18; 3 of 22; 4 of 2 & 14; 5 of 13; 7 of 15]	1111121
	Rear Cable Return Kit w/Roll Tube Ext. [Includes A; 1; 3; 5; 6; 9; 11; 17; 19; 20; 21; 2 of 12, 15, 17 & 18; 3 of 22; 4 of 2 & 14; 5 of 13; 7 of 15]	1112064
	Front Cable Return Kit [Includes A; 1; 3; 5; 6; 9; 10; 11; 17; 19; 2 of 12, 16 & 18; 3 of 22; 4 of 2 & 14; 5 of 13; 7 of 15]	1111122
	Front Cable Return Kit w/Roll Tube Ext. [Includes A; 1; 3; 5; 6; 9; 11; 17; 19; 20; 21; 2 of 12, 15, 17 & 18; 3 of 22; 4 of 2 & 14; 5 of 13; 7 of 15]	1112065
	HD Rear Cable Return Kit - 3" [Includes A; 1; 3; 5; 6; 9; 10; 11; 17; 19; 2 of 12, 16 & 18; 3 of 22; 4 of 2 & 14; 5 of 13; 7 of 15]	*1124868
	HD Rear Cable Return Kit w/Roll Tube Ext. - 3" [Includes A; 1; 3; 5; 6; 9; 11; 17; 19; 20; 21; 2 of 12, 15, 17 & 18; 3 of 22; 4 of 2 & 14; 5 of 13; 7 of 15]	*1124905
	HD Front Cable Return Kit - 3" [Includes A; 1; 3; 5; 6; 9; 10; 11; 17; 19; 2 of 12, 16 & 18; 3 of 22; 4 of 2 & 14; 5 of 13; 7 of 15]	*1124869
	HD Front Cable Return Kit w/Roll Tube Ext. - 3" [Includes A; 1; 3; 5; 6; 9; 11; 17; 19; 20; 21; 2 of 12, 15, 17 & 18; 3 of 22; 4 of 2 & 14; 5 of 13; 7 of 15]	*1124906
A	Cable Return Mounting Hdw [Includes 3 of 4, 7 & 8]	1111469
	PARTS	
1	Hex Head Cap Screw - 1/4" x 2-1/4"	1702672
2	Machine Screw - 1"	1702654
3	Nylon Lock Hex Nut - 1/4"	1701543
4	Self-Tapping Screw - 3/8" x 1"	1700400
5	Universal Cable Return Housing	1114728
6	Spacer Washer - 1-9/16"	1131010
7	Lock Washer - 3/8"	1700434
8	Hex Nut - 3/8"	1700407
9	Velcro® Hook - 1" x 4"	1115206
10	Extension Spring	1702657
	Heavy-Duty Extension Spring	1702896
11	Cable w/Return Strap	1114582
	Cable w/Return Strap - 3"	*1124870
12	Front Retainer Plate	1114691
13	Pulley - 1/16" Cable Groove	1703006
14	Plastic Spacer - 3/8"	1111056
15	Machine Screw Nut	1702653
16	Rope Block Retainer Plate	1112997
17	Flat Washer - #10	1111054
18	Machine Screw - 1-1/2"	1702656
19	Machine Screw - 1-1/4"	1702655
20	Swaged Roll Tube Extension - 2" x 32"	1117496

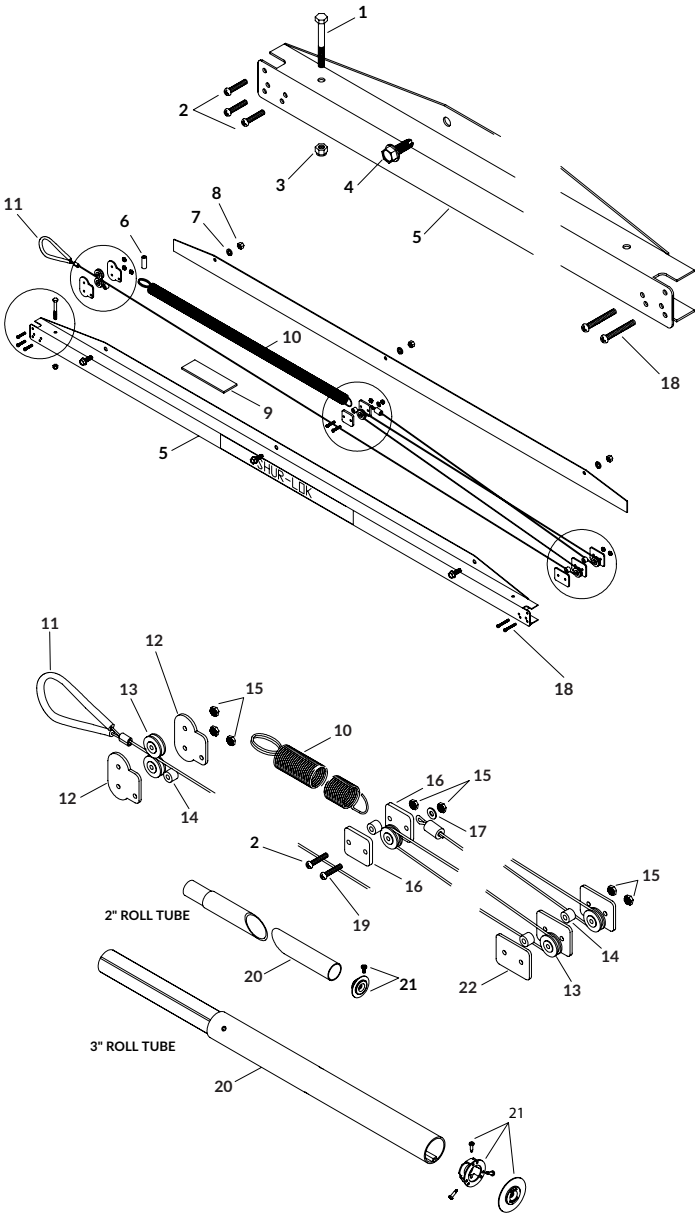

	DESCRIPTION	P/N
	Roll Tube Extension - 3" x 45"	*1124901
21	End Plug/Cable Retainer w/Screw	1111808
	End Plug/Cable Retainer w/Screws - 3"	*1124904
22	Rear Retainer Plate	1110913

*Used with 3" roll tubes.

NOTE: Reverse-roll systems, use rear returns on the front of trailer, front returns on the rear of trailer.

USE W/ BELT 'N RATCHET - RETURNS - ROPE

	DESCRIPTION	P/N
	KITS	
	Rope Return Kit [Includes: 1; 2 of 5; 4 of 2, 3 & 4]	1100064
	PARTS	
1	Solid Braid Rope - 1/4" - 32'	1100469
2	Hex Head Cap Screw - 1/4" x 1"	1700381
3	Hex Nut - 1/4"	1700408
4	Lock Washer - 1/4"	1700436
5	Box Hook - 3/8" x 3-1/4"	1700682

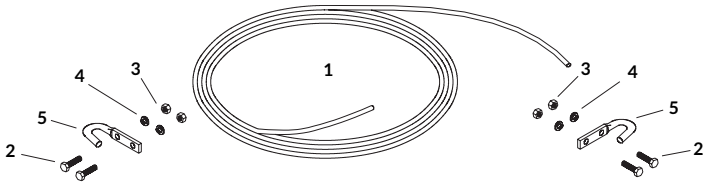

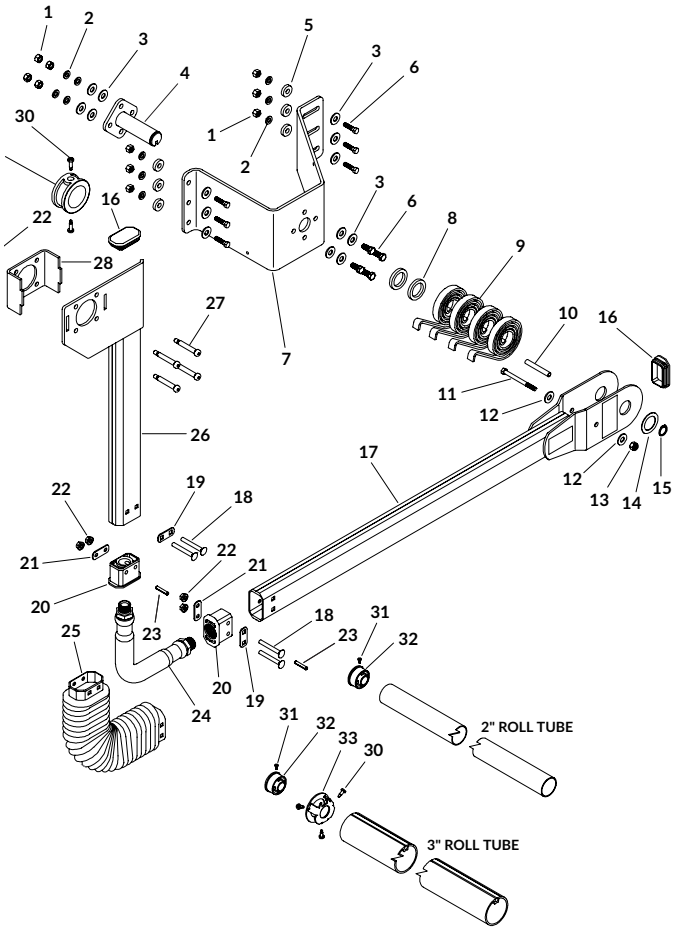

RETURNS - HEAVY-DUTY FRONT ARM

	DESCRIPTION	P/N
	KITS & HARDWARE	
	HD Front Arm Return Kit [Includes: C; D; E; F; 4; 17; 24; 25; 26; 32; 2 of 5; 4 of 9; Sloped Bracket and 3-3/4" Pivot Bracket]	1124119
	HD Front Arm Return Kit - 3" [Includes: C; D; E; F; 4; 17; 24; 25; 26; 32; 2 of 5; 4 of 9; Sloped Bracket and 3-3/4" Pivot Bracket]	*1124794
A	Flex Arm Joint Kit - 4500 HD [Includes: 24; 25; 2 of 19; 20 ; 21 & 23; 4 of 18 & 22]	1125154
B	Flex Arm Joint Hdw [Includes: 19; 21; 2 of 18 & 22]	1121702
C	Spring Support Hdw [Includes: 10; 11; 13; 14; 15; 2 of 8 & 12]	1116926
D	Pivot Bracket Hdw - 6" Sloped [Includes: 6 of 5; 16 of 1; 2 & 6; 26 of 3]	1121580
E	Exposed Spline/Bearing Hdw [Includes: 28; 29; 2 of 16; 20 & 30; 4 of 22; 27]	1121723
F	Exposed Spline/Bearing Hdw - 3" [Includes: 28; 29; 33; 2 of 16; 20 & 30; 3 of 31; 4 of 22 & 27]	*1124795
G	Flex Joint Hdw (2) [Includes: 2 of 19 & 21; 4 of 18 & 22]	1121647
	PARTS	
1	Hex Nut - 3/8"	1700407
2	Lock Washer - 3/8"	1700434
3	Flat Washer - 3/8"	1700429
4	Pivot Pin - 4 Spring	1116920
5	Spacer Washer - 1/4" x 1" OD x .406"	1120291
6	Hex Head Cap Screw - 3/8" x 1-1/4"	1702891
7	Pivot Mnt Bracket - 6" x 9-1/4"	1121578
8	Spacer Washer - 1/4" x 1.81 OD x 1.28"	1118318
9	Spiral Torsion Spring	1111027
10	Spacer Tube - .35" x 2-5/8"	1117033
11	Hex Head Cap Screw - 5/16" x 3-1/2"	1201022
12	Flat Washer - 5/16"	1700428
13	Nylon Lock Hex Nut - 5/16"	1700419
14	Flat Washer - 1-1/4" x 1-7/8"	1702890
15	Retaining Ring - 1-1/4"	1702888
16	Cap Plug	1704892
17	Lower Flex Arm w/Warning Decals - Front	1121617
18	Carriage Bolt - 5/16" x 2-1/2" - GR5	1701455
19	Bellow Plate - Square Holes	1121414
20	End Fitting	1704891
21	Bellow Plate - Round Holes	1121413
22	Flanged Nylon Lock Nut - 5/16"	1704931
23	Spring Pin - 1/4" x 1-3/8"	1704966
24	Flex Arm Joint	1706825
25	Arm Bellow	1704775
26	Upper Flex Arm - Bearing	1121281
	Upper Flex Arm - Bearing - 3"	*1124958
27	Shoulder Bolt - 3/8" x 2" Thread x 5/16" x 1/2"	1704943
28	Bearing Mount Box	1121430
	Bearing Mount Box - 3"	*1123248
29	Rear Arm Bearing Ring	1704942
	Rear Arm Bearing Ring - 3"	*1705160
30	Self-Drilling Screw - 1/4" x 3/4"	1700398
31	Self-Drilling Screw - #10-16 x 1/2"	1704743
32	Nylon End Plug	1100138
33	Roll Tube End Cap - Front	*1121041

*Used with 3" roll tubes.

Table of Contents

Replacement Parts

RETURNS - SHUR-RETURN™

	DESCRIPTION	P/N
	KITS & HARDWARE	
	Shur-Return™ Kit [Includes: Tube Assembly; A]	*1100824
	2-Piece Shur-Return™ Kit [Includes: Tube Assembly; A; 7; 8; 9; 4 of 10]	*1107881
	Shur-Return™ Kit - 3" [Includes: Tube Assembly; B]	*,**1124875
	2-Piece Shur-Return™ Kit - 3" [Includes: Tube Assembly; B; 7; 8; 9; 4 of 10]	*,**1124876
A	Shur-Return™ Hdw [Includes 1; 2; 3; 4; 5; 5 of 6]	1107128
B	Shur-Return™ Hdw - 3" [Includes 1; 2; 3; 4; 5; 3 of 11; 5 of 6]	**1124881
	PARTS	
1	Nylon End Plug	1100138
2	Eyebolt Anchor - 5/16"	1700717
3	Nylon Lock Hex Nut - 5/16"	1700419
4	Hex Nut - 5/16"	1700411
5	Self-Drilling Screw - #10-16 x 1/2"	1704743
6	Self-Tapping Screw - 1/4" x 1/2"	1700736
7	Spring Retainer Plug	1100827
8	Connector Sleeve	1107879
9	Shur-Return™ Rope - 12'	1100826
10	Hex Socket Set Screw - #10-32 x 3/16"	1701423
11	Self-Drilling Screw - 1/4" x 1"	1705198

*Additional over length shipping charges apply.
**Used with 3" roll tubes.

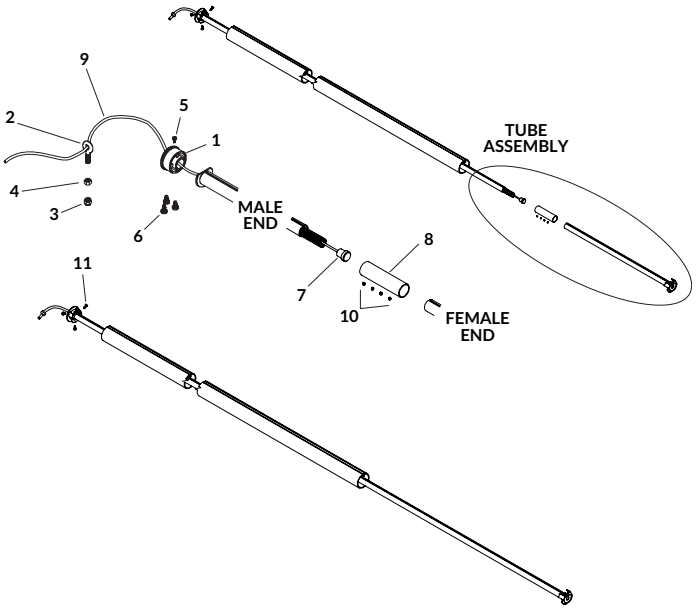

RETURNS - STRETCH CORD (BUNGEE)

	DESCRIPTION	P/N
	KITS & HARDWARE	
	Front Stretch Cord Roll Return Kit [Includes: A; 1; 2]	1114359
	Front Stretch Cord Roll Return Kit - 3" [Includes: B; 1; 2]	*1124882
	Shock Cord Roll Return Kit - 2" [Includes: 10; 12; 14; 16; 2 of 11 & 13; 6 of 15]	1114951
	Replacement End Plug Kit [Includes: 3; 8]	1119034
A	Roll Return Hdw [Includes: 3; 4; 5; 6; 7; 8; 9]	1107127
B	Roll Return Hdw - 3" [Includes: 3; 4; 5; 6; 7; 8; 9; 17; 3 of 15]	*1124883
	PARTS	
1	Roll Return Tube Set - 2 Pc.	1111067
2	Roll Return Stretch Cord - 138₆	**1114360
	Bulk Roll Return Stretch Cord (Sold only in 300' rolls)	1703335
3	Nylon End Plug	1100138
4	Flat Washer - 1/2"	1703373
5	Eyebolt Anchor - 5/16"	1700717
6	Nylon Lock Hex Nut - 5/16"	1700419
7	Hex Nut - 5/16"	1700411
8	Self-Drilling Screw - #10 x 1/2"	1704743
9	Protective Stretch Cord Cover	1107680
10	Shock Cord Eye Bracket	1703445
11	Self-Tapping Screw - 3/8" x 1"	1700400
12	Shock Cord Tie-Down Strap	1114948
13	Rear Arm Retaining Collar	1704352
14	Roll Tube Eye	1114947
15	Self-Drilling Screw - 1/4" x 1"	*1705198
16	Shock Cord - 11-1/2"	1122332
17	Roll Tube End Cap - Front	*1121041

*Used with 3" roll tubes.
**Comes with protective stretch cord cover (P/N 1107680).

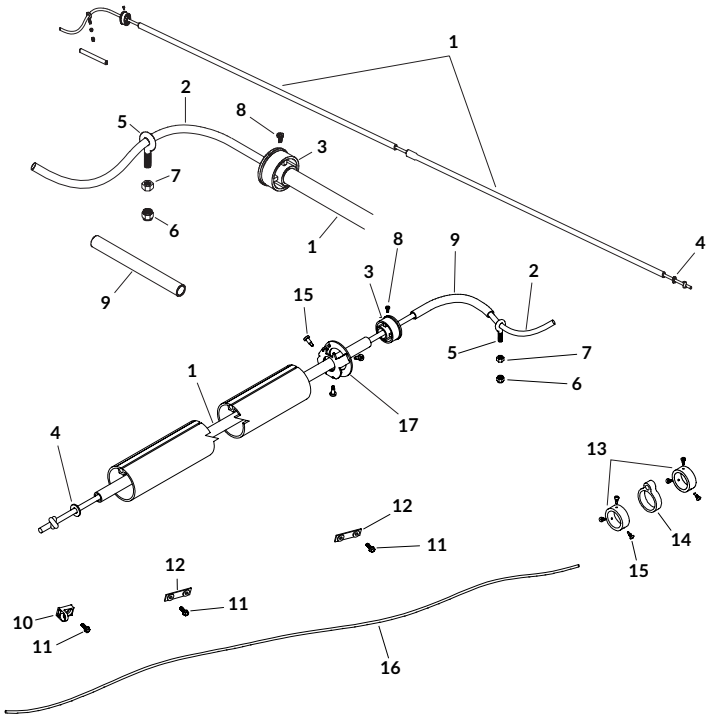

Table of Contents

Replacement Parts

ROLL TUBE DEFLECTORS

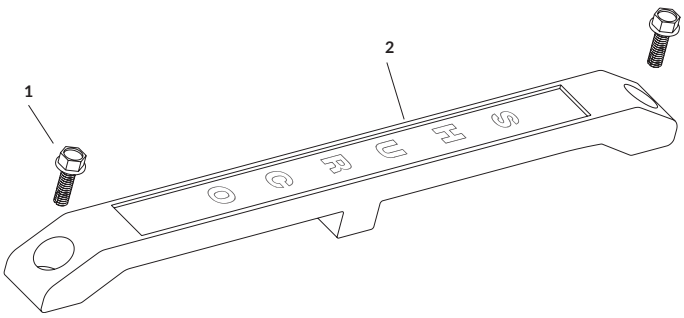

	DESCRIPTION	P/N
	KITS	
	Roll Tube Deflector Kit (1) - Gray [Includes: 1; 2 of 2]	1117513
	Roll Tube Deflector Kit (2) - Gray [Includes 2 of 1; 4 of 2]	1114579
	Roll Tube Deflector Kit (1) - Black [Includes: 1; 2 of 2]	1117514
	Roll Tube Deflector Kit (2) - Black [Includes 2 of 1; 4 of 2]	1114659
	PARTS	
1	Roll Tube Deflector - Gray - 17-1/4"	1112029
	Roll Tube Deflector - Black - 17-1/4"	1114658
2	Self-Tapping Screw - 5/16" x 1"	1701059

TARP STOPS

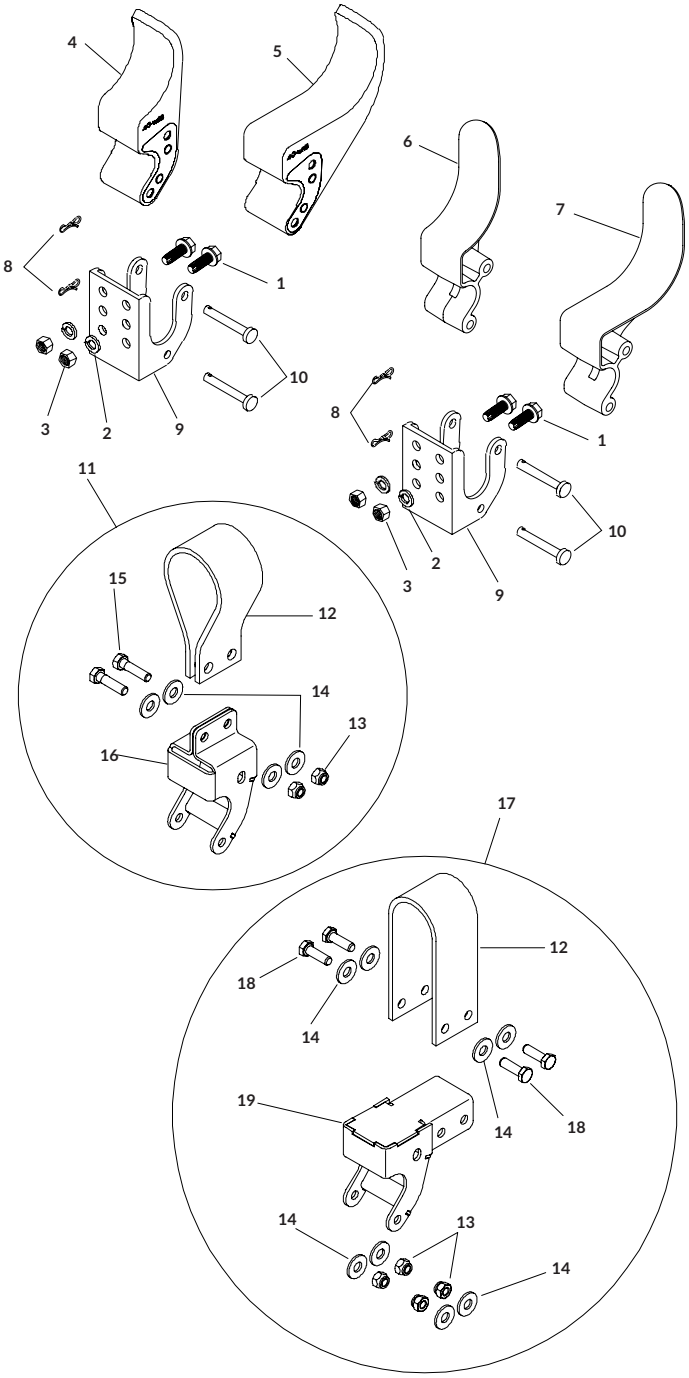

	DESCRIPTION	P/N
	KITS & HARDWARE	
	Easy-Off Aluminum Tarp Stop w/Hdw [Includes: A; B; 6; 9]	1124780
	Easy-Off Aluminum 6" Offset Tarp Stop w/Hdw [Includes: A; B; 7; 9]	1124783
	Easy-Off Flexible Tarp Stop w/Hdw [Includes: A; B; 4; 9]	1114047
	EOF Flexible 6" Offset Tarp Stop w/Hdw [Includes: A; B; 5; 9]	1114388
	Easy-Off Belt Flex Tarp Stop w/Hdw [Includes: A; B; 11; 9]	1122278
	EOF Belt Flex 6" Offset Tarp Stop w/Hdw [Includes: A; B; 17; 9]	1123798
A	Bowtie Cotter Pin/Ring Assembly [Includes: 2 of 8 & 10]	1118389
B	Mounting Fasteners (2) [Includes: 2 of 1, 2 & 3]	1118592
	PARTS	
1	Self-Tapping Screw - 3/8" x 1"	1700400
2	Lock Washer - 3/8"	1700434
3	Hex Nut - 3/8"	1700407
4	EOF Flexible Tarp Stop Upright	1115216
5	EOF Flexible 6" Offset Tarp Stop Upright	1115217
6	Easy-Off Aluminum Tarp Stop Upright	1705775
7	Easy-Off Aluminum 6" Offset Tarp Stop Upright	1705454
8	Bowtie Cotter Pin - 1-3/8"	1704380
9	Easy-Off Tarp Stop Body	1100833
10	Clevis Pin - 5/16" x 2-7/8"	1703604
11	Easy-Off Belt Flex Tarp Stop Upright [Includes: 12; 16; 2 of 13 & 15; 4 of 14]	1122260
12	Rubber Belting - .20" x 2" x 12"	1122237
13	Nylon Lock Hex Nut - 5/16"	1700419
14	Flat Washer - 5/16"	1700428
15	Hex Head Cap Screw - 5/16" x 1-1/4"	1701208
16	Tarp Stop Upright Bracket	1122259
17	Easy-Off Belt Flex 6" Offset Tarp Stop Upright [Includes: 12; 19; 4 of 13 & 18; 8 of 14]	1123455
18	Hex Head Cap Screw - 5/16" x 1"	1704416
19	Tarp Stop Upright Bracket - Offset	1123454

Table of Contents

Replacement Parts

TARP TUBES

	DESCRIPTION	P/N
	KITS & HARDWARE	
	U-Clamp Kit 2" - (3) [Includes: 3 of 8 & 9]	1115966
	U-Clamp Kit 2" - (8) [Includes: 8 of 8 & 9]	1118643
	U-Clamp Kit 2" - (10) [Includes: 10 of 8 & 9]	1118644
	U-Clamp Kit 2" - (14) [Includes: 14 of 8 & 9]	1118663
	U-Clamp Kit 3" - (3) [Includes: 3 of 8 & 9]	1126790
	U-Clamp Kit 3" - (8) [Includes: 8 of 8 & 9]	1126791
	U-Clamp Kit 3" - (10) [Includes: 10 of 8 & 9]	1126792
	U-Clamp Kit 3" - (14) [Includes: 14 of 8 & 9]	1126793
	Manual Crank Kit - 3" [Includes: A; 16; 18; 21]	1122879
A	Drive Shaft Hdw - 3" [Includes: 14; 15; 17; 19; 20; 3 of 22]	1131569
B	Fixed Tube Hdw [Includes: 2 of 12 & 13]	1115112
	PARTS	
1	Roll Tube w/Spline - 2" x 8'	1128148
	Roll Tube w/Spline - 2" x 11'-8"	1128147
	Roll Tube w/Spline - 2" x 12'-9"	1119118
	Roll Tube w/Spline - 2" x 16'	1107057
	Roll Tube w/Spline - 2" x 20'	1107058
	Roll Tube w/Spline - 2" x 24'	1107059
2	Roll Tube - 2" x 8'	1706153
	Roll Tube - 2" x 11'	1706152
	Roll Tube - 2" x 15'	1706151
	Roll Tube - 2" x 16'	1700048
	Roll Tube - 2" x 20'	1700046
	Roll Tube - 2" x 24'	1701427
3	Fixed Tube - 1-1/8" x 8'	1706156
	Fixed Tube - 1-1/8" x 11'	1706155
	Fixed Tube - 1-1/8" x 15'	1706154
	Fixed Tube - 1-1/8" x 16'	1700051
	Fixed Tube - 1-1/8" x 20'	1700049
	Fixed Tube - 1-1/8" x 24'	1701428
4	Alum Roll Tube - 3" x 12'	1118639
	Alum Roll Tube - 3" x 16'	1704439
	Alum Roll Tube - 3" x 20'	1704398
	Alum Roll Tube - 3" x 24'	1704236
5	Alum Splice Tube - 3"	1704863
6	Roll Tube Swaged Connector	1107076
7	Fixed Tube Swaged Connector	1107077
8	Plastic U-Clamp	1701354
9	Self-Drilling Screw - 1/4" x 3/4"	1700398
	Self-Drilling Screw - 1/4" x 1"	1705198
10	Spline Shaft Replacement - 2" x 9"	1107260
	Spline Shaft Replacement - 2" x 13"	1117670
	Spline Shaft Replacement - 2" x 21"	1120107
11	Spline Shaft w/o Connector Tube	1701244
12	Plastic End Plug	1700523
13	Flat-Headed Self-Drilling Screw - 1/4" x 3/4"	1704768
14	Carriage Bolt - 5/16" x 1" - GR5	1704237
15	Cartridge Clamp	1118194
16	Rear Cartridge	1121039
17	Nylon Lock Nut - 5/16"	1704297
18	Roll Tube End Cap - Rear	1121040
19	Hex Head Cap Screw - 3/8" x 2"	1704264
20	Nylon Lock Nut - 3/8"	1701580
21	Manual Crank Spline - 3"	1121111
22	Self-Drilling Screw - 1/4" x 1"	1705198

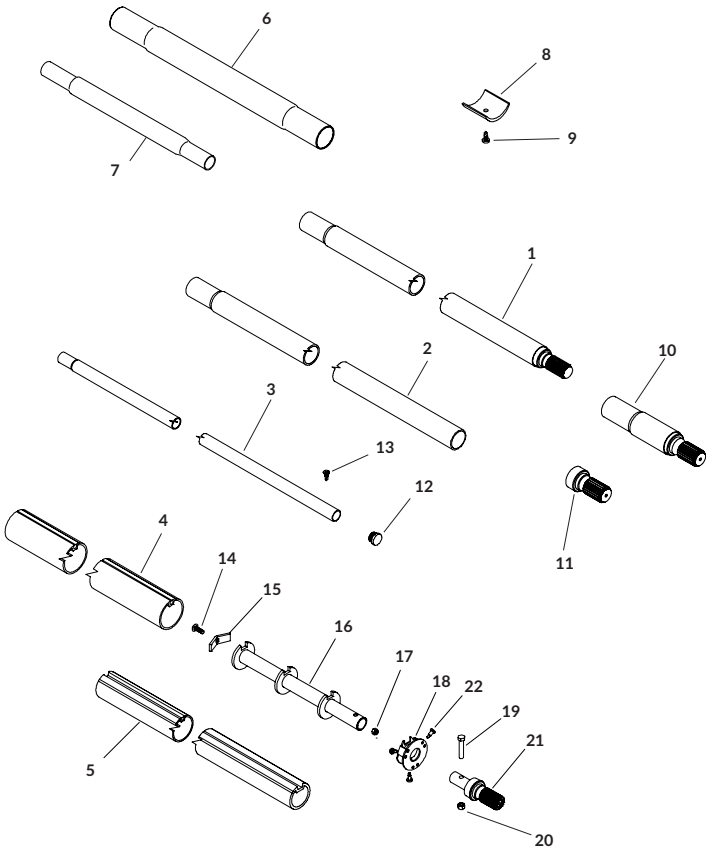

Table of Contents

Replacement Parts

USE W/BELT 'N RATCHET - TARP TUBES

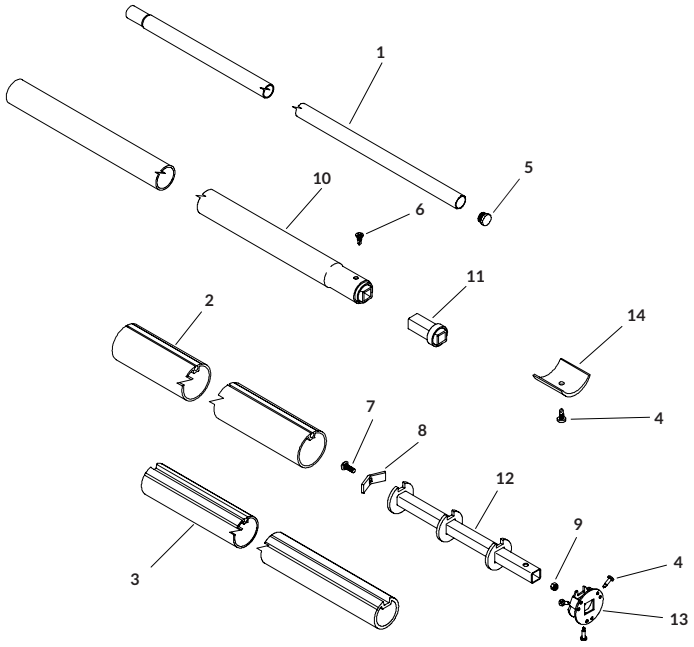

	DESCRIPTION	P/N
	KITS & HARDWARE	
	Manual Crank Kit - 3" Aluminum Roll Tube w/Square Key [Includes: 7; 8; 9; 13; 14; 3 of 4]	1124899
	Fixed Tube Hdw [Includes: 2 of 5 & 6]	1115112
	PARTS	
1	Fixed Tube - 1-1/8" x 8'	1706156
	Fixed Tube - 1-1/8" x 11'	1706155
	Fixed Tube - 1-1/8" x 15'	1706154
	Fixed Tube - 1-1/8" x 16'	1700051
	Fixed Tube - 1-1/8" x 20'	1700049
	Fixed Tube - 1-1/8" x 24'	1701428
2	Alum Roll Tube - 3" x 12'	1118639
	Alum Roll Tube - 3" x 16'	1704439
	Alum Roll Tube - 3" x 20'	1704398
	Alum Roll Tube - 3" x 24'	1704236
3	Alum Splice Tube - 3"	1704863
4	Self-Drilling Screw - 1/4" x 1"	1705198
5	Plastic End Plug	1700523
6	Flat-Headed Self-Drilling Screw - 1/4" x 3/4"	1704768
7	Carriage Bolt - 5/16" x 1" - GR5	1704237
8	Cartridge Clamp	1118194
9	Nylon Lock Nut - 5/16"	1704297
10	Roll Tube w/Square Key - 2" x 8'	1105174
	Roll Tube w/Square Key - 2" x 11'	1128150
	Roll Tube w/Square Key - 2" x 15'	1128149
	Roll Tube w/Square Key - 2" x 16'	1105132
	Roll Tube w/Square Key - 2" x 20'	1105131
	Roll Tube w/Square Key - 2" x 24'	1105124
11	Roll Tube Square Key Replacement	1105033
12	Rear Cartridge w/Square Key	1124893
13	Roll Tube End Cap - Rear w/Square Key	1124896
14	Plastic U-Clamp	1701354

Table of Contents

Replacement Parts

FASTENERS

DESCRIPTION	P/N	CASE
Self-Tapping Screw - 3/8" x 1"	1700400	840
Plastic U-Clamp	1701354	1500
Self-Drilling Screw - 1/4" x 3/4"	1700398	2500
Clevis Pin - 5/16" x 2-7/8"	1703604	200
Bow tie Cotter Pin - 1-3/8"	1704380	200

LATCHPLATES

DESCRIPTION	P/N	CASE
Alum Side Mount Latchplate - 4'	1100749	100
Alum Side Mount Latchplate - 6'	1700802	100
Alum Side Mount Latchplate - 8'	1700522	100

TARP STOPS

DESCRIPTION	P/N	CASE
EOF Tarp Stop Body	1100833	100
EOF Alum Tarp Stop Upright	1705775	50
EOF Alum 6" Offset Tarp Stop Upright	1705454	35
EOF Flexible 6" Offset Tarp Stop Upright	1115217	60
EOF Flexible Tarp Stop Upright	1115216	100
EOF Alum Tarp Stop w/Hdw	1124780	75
EOF Alum 6" Offset Tarp Stop w/Hdw	1124783	50
EOF Flexible Tarp Stop w/Hdw	1114047	50
EOF Flexible 6" Offset Tarp Stop w/Hdw	1114388	50

TARP TUBES

DESCRIPTION	P/N	CASE
Roll Tube - 2" x 8'	1706153	50
Roll Tube - 2" x 11'	1706152	50
Roll Tube - 2" x 15'	1706151	50
Roll Tube - 2" x 16'	1700048	50
Roll Tube - 2" x 20'	1700046	50
Roll Tube - 2" x 24'	1701427	50
Fixed Tube - 1-1/8" x 8'	1706156	100
Fixed Tube - 1-1/8" x 11'	1706155	100
Fixed Tube - 1-1/8" x 15'	1706154	100
Fixed Tube - 1-1/8" x 16'	1700051	100
Fixed Tube - 1-1/8" x 20'	1700049	100
Fixed Tube - 1-1/8" x 24'	1701428	100
Ridgepole Tube - 8'	1706159	50
Ridgepole Tube - 11'	1706158	50
Ridgepole Tube - 15'	1706157	50
Ridgepole Tube - 16'	1701204	50
Ridgepole Tube - 20'	1701205	50
Ridgepole Tube - 24'	1701206	50

WIRE - DUAL CONDUCTOR

DESCRIPTION	P/N	CASE
Dual-Conductor Wire - 6 Ga. (500')	1705995	500
Dual-Conductor Wire - 6 Ga. (1800')	1132341	1800
Dual-Conductor Wire - 4 Ga. (per foot)	1705107	1250

Table of Contents

Replacement Parts

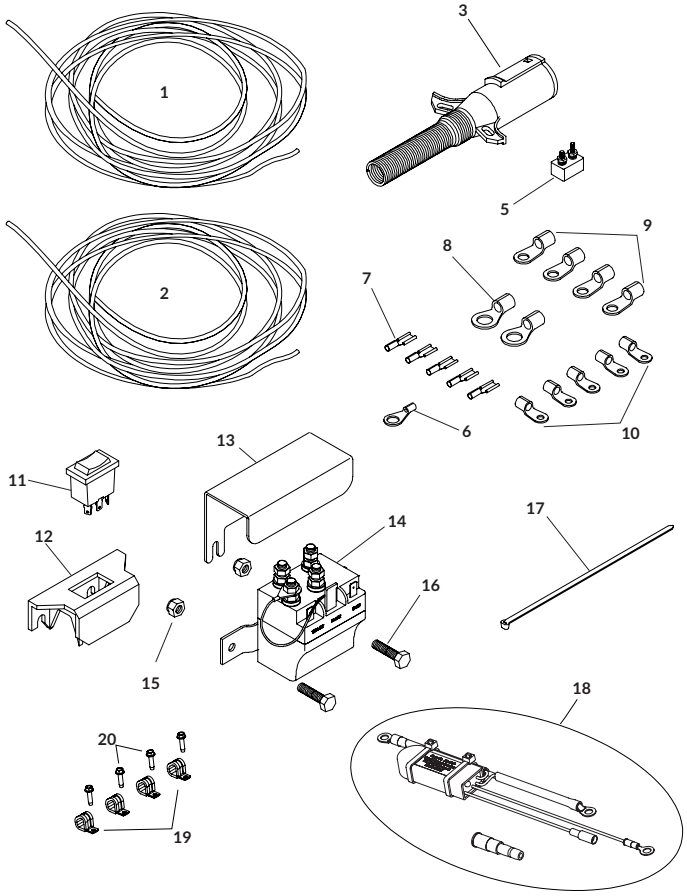

	DESCRIPTION	P/N
20	Self-Tapping Screw - 1/4" x 1"	1704338
21	Dielectric Connector Protector	*1704378

*These items are NOT shown in the drawing.

CAB WIRING KITS

	DESCRIPTION	P/N
	ROCKER SWITCH KITS	
	+ 4500 SERIES HD	
	Cab Wiring for Rocker - 6 Ga. x 20' - SMART50 x 40 Amp [Includes: A; 1; 2; 3; 18; 15 of 17]	1127844
	Cab Wiring for Rocker - 6 Ga. x 30' - SMART50 x 40 Amp [Includes: A; 1; 2; 3; 18; 15 of 17]	1127845
5	40-Amp Modified-Reset Circuit Breaker	1704354
18	50-Amp Smart Circuit Breaker	1126783
	+ APEX™	
	Cab Wiring for Rocker - 6 Ga. x 20' - SMART80 x 50 Amp [Includes: B; 1; 2; 3; 18; 15 of 17]	1132461
	Cab Wiring for Rocker - 6 Ga. x 30' - SMART80 x 50 Amp [Includes: B; 1; 2; 3; 18; 15 of 17]	1127141
5	50-Amp Auto-Reset Circuit Breaker	1703480
18	80-Amp Smart Circuit Breaker	1126784
	WIRELESS KITS	
	+ 4500 SERIES HD / APEX™	
	Cab Wiring for Wireless - 6 Ga. x 20' - 40 Amp [Includes: **C**; **1**; **3**]	1116928
	Cab Wiring for Wireless - 6 Ga. x 30' - 40 Amp [Includes: **C**; **1**; **3**]	1119643
	Cab Wiring for Wireless - 6 Ga. x 40' - 40 Amp [Includes: **C**; **1**; **3**]	1119644
5	40-Amp Modified-Reset Circuit Breaker	1704354
	HARDWARE	
A	Elec Parts Kit w/Rocker - 40 Amp Modified [Includes: 4; 5; 6; 11; 12; 13; 14; 2 of 8, 15 & 16; 4 of 9; 5 of 7; 6 of 10]	1118368
B	Elec Parts Kit w/Rocker - 50 Amp Modified [Includes: 4; 5; 6; 11; 12; 13; 14; 2 of 8, 15 & 16; 4 of 9; 5 of 7; 6 of 10]	1116271
C	Breaker Hdw for Wireless - 6 Ga. x 40 Amp [Includes: 4; 5; 2 of 8 & 9; 15 of 17]	1120855
D	Wire Retaining Hdw [Includes: 21; 4 of 19 & 20]	1120906
	PARTS	
1	Dual-Conductor Wire - 6 Ga. - 20'	1119078
	Dual-Conductor Wire - 6 Ga. - 30'	1118495
	Dual-Conductor Wire - 6 Ga. - 40'	1119645
	Dual-Conductor Wire - 6 Ga. - 50'	1110312
	Dual-Conductor Wire - 6 Ga. - 60'	1127835
	Dual-Conductor Wire - 6 Ga. - 75'	1108102
	Dual-Conductor Wire - 6 Ga. - 80'	1118388
	Dual-Conductor Wire - 6 Ga. - 100'	1108101
	Dual-Conductor Wire - 6 Ga. - 125'	1128140
2	Electrical Wire - 3 Strand 14 Ga. - 15'	1116482
3	HD Dual-Conductor Plug - Vertical Pin	1115385
4	Circuit Breaker Boot - Red	*1704411
5	40-Amp Modified-Reset Circuit Breaker	1704354
	50-Amp Auto-Reset Circuit Breaker	1703480
6	Ring Terminal - 14 Ga. x 1/4" Stud - Solenoid	1704153
7	Quick Disconnect - Female x 14 Ga. x 1/4" - Switch/Solenoid	1703659
8	Ring Terminal - 6 Ga. x 3/8" Stud - Battery	1703244
9	Ring Terminal - 6 Ga. x #10 Stud - Motor/ Breaker	1703245
10	Ring Terminal - 6 Ga. x 1/4" Stud - Motor/ Solenoid	1702707
11	Rocker Switch	1116020
12	Rocker Switch Mounting Bracket	1703661
13	Solenoid Cover	1703896
14	Motor-Reversing Solenoid 12V - 2 Pt Mnt - Black Wire	1703845
15	Nylon Lock Hex Nut - #10-24	1808844
16	Hex Flange Cap Screw - #10-24 x 1"	1704905
17	Cable Tie - 8"	1703231
18	50-Amp Smart Circuit Breaker	1126783
	80-Amp Smart Circuit Breaker	1126784
19	Wire Clip - 3/4" ID	1702108

TRAILER WIRING KITS

	DESCRIPTION	P/N
	KITS & HARDWARE	
	SMARTwire™ Dual-Conductor Kit - 6 Ga - L Bracket [Includes: A; 2; 3; 4]	1132502
	SMARTwire™ Dual-Conductor Kit - 6 Ga - Z Bracket [Includes: A; 2; 3; 5]	1132504
A	Dual-Conductor Hdw [Includes: 2 of 6, 7, 8, 9, 11 & 13]	1109017
B	Wire Retaining Hdw [Includes: 19; 4 of 17 & 18]	1120906
	SMARTwire™ MALE x FEMALE	
1	SMARTwire™ - 6 Ga. - Plug/Socket - 8'	1704874
	SMARTwire™ - 6 Ga. - Plug/Socket - 16'	1704827
	SMARTwire™ - 6 Ga. - Plug/Socket - 25'	1704704
	SMARTwire™ - 6 Ga. - Plug/Socket - 30'	1125597
	SMARTwire™ SOCKET x FEMALE	
2	SMARTwire™ Dual-Conductor Socket - 6 Ga. x 3'6"	1120670
	PARTS	
3	HD Dual-Conductor Plug - Vertical Pin	1115385
4	Conductor Plug Mtg (L) Bracket	1109015
5	Conductor Plug Mtg (Z) Bracket	1127798
6	Self-Tapping Screw - 3/8" x 1"	1700400
7	Hex Nut - 3/8"	1700407
8	Lock Washer - 3/8"	1700434
9	Hex Head Cap Screw - 5/16" x 3/4"	1701045
10	Top Lock Flange Nut - 5/16"	1704946
11	Flat Washer - 1/4"	1700427
12	Cable Tie - 8"	1703231
13	Harness Lock Pin - Long	1704696
14	Harness Lock Pin - Short	1704711
15	Harness Lock Pin - 1/4" x 7/8"	1704751
16	Dual-Conductor Housing - Female	1704978
17	Wire Clip - 3/4" ID	1702108
18	Self-Tapping Screw - 1/4" x 1"	1704338
19	Dielectric Connector Protector	*1704378

*These items are not shown in the drawings.

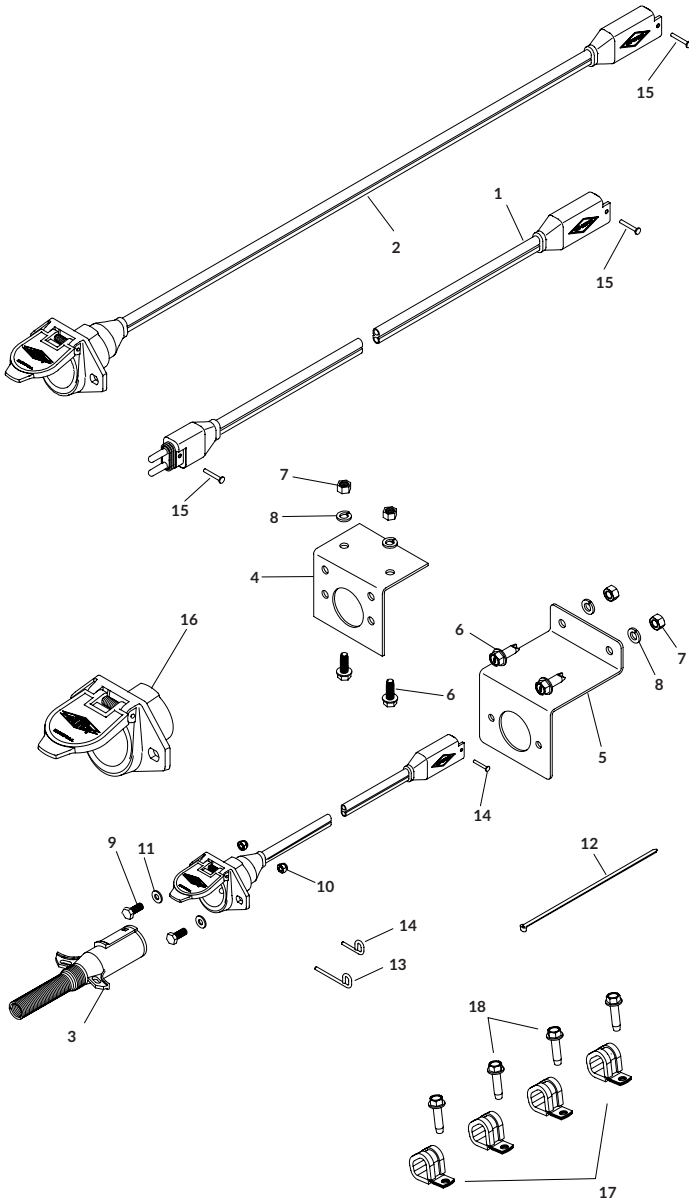

Table of Contents

Replacement Parts

RECEIVERS

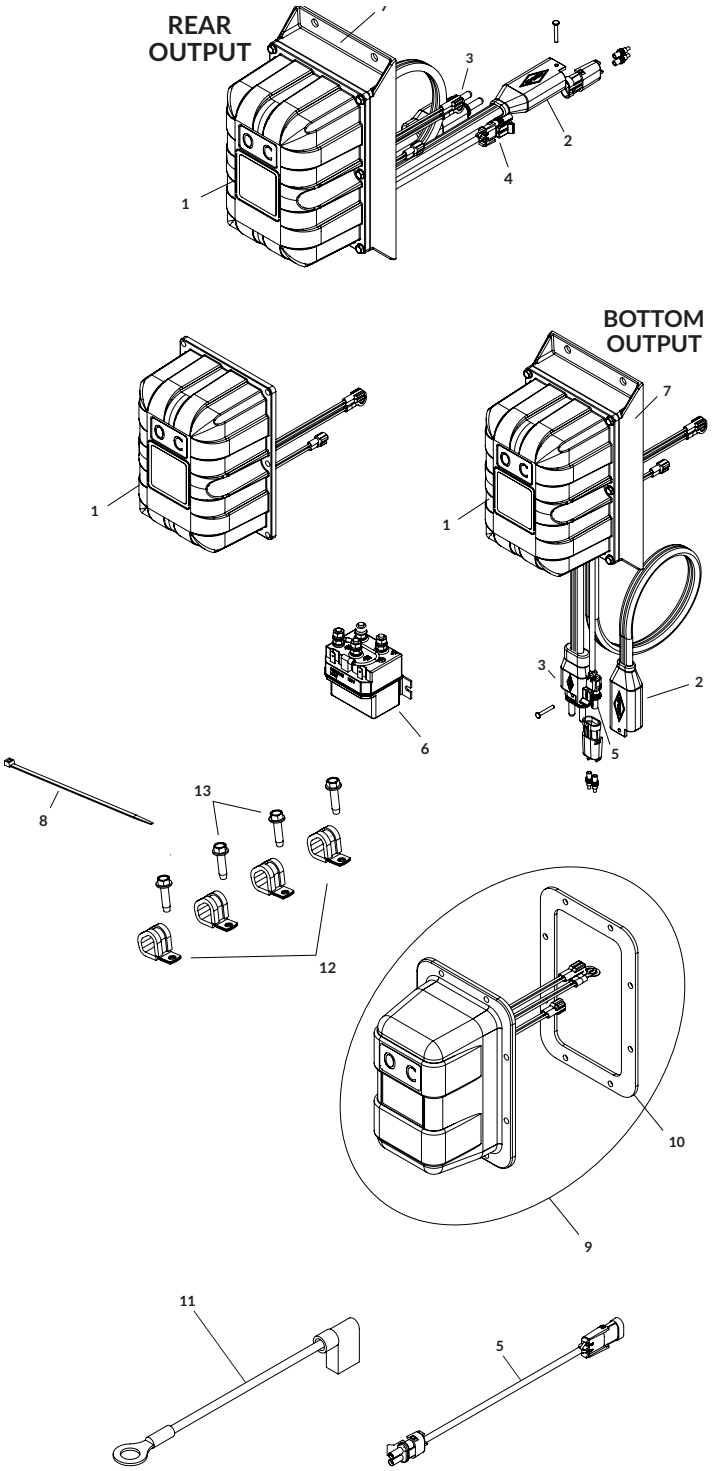

	DESCRIPTION	P/N
	RECEIVER CONVERSION KITS	
	ShurLink™ Receiver Conv. Cover - Tarp - Express [Includes: 9; 11]	1132226
	ShurLink™ Receiver Conv. Cover - Tarp - Non-Express [Includes: 9; 11]	1132227
	EXPRESS MODE	
	+ 4500 SERIES HD	
	ShurLink™ Receiver - Express - Rear Output [Includes: A; B; 1; 2; 3; 4; 6; 7; 15 of 8]	1131566
	ShurLink™ Receiver - Express - Bottom Output [Includes: A; B; 1; 2; 3; 4; 6; 7; 15 of 8]	1131572
1	ShurLink™ Receiver Cover - Express	1131673
	+ APEX™	
	ShurLink™ Receiver - Apex - Express - Bottom Output [Includes: A; B; 1; 2; 3; 4; 6; 7; 15 of 8]	1131614
1	ShurLink™ Receiver Cover - Express	1132506
	NO EXPRESS MODE	
	+ 4500 SERIES HD	
	ShurLink™ Receiver - Non-Express - Bottom Output [Includes: A; B; 1; 2; 3; 4; 6; 7; 15 of 8]	1131586
	ShurLink™ Receiver - Non-Express - Rear Output [Includes: A; B; 1; 2; 3; 4; 6; 7; 15 of 8]	1131581
1	ShurLink™ Receiver Cover - Non-Express	1131674
	HARDWARE	
A	ShurLink™ Receiver Mounting Hdw	1131571
B	Shur-Link™ Receiver Hdw w/Gland	1132510
C	Wire Retaining Hdw [Includes: 14; 4 of 12 & 13]	1120906
	SMARTWIRE™ FEMALE X .25" RING	
2	SMARTwire™ - 6 Ga. - Socket x 1/4" Terminal -2'4"	1129607
	SMARTwire™ - 6 Ga. - Socket x 1/4" Terminal -6'3"	1120817
	SMARTwire™ - 6 Ga. - Socket x 1/4" Terminal - 12'	1127241
	SMARTWIRE™ MALE X .25" RING	
3	SMARTwire™ - 6 Ga. - Plug x 1/4" Terminal - 2'4"	1704705
	SMARTwire™ - 6 Ga. - Plug x 1/4" Terminal - 7'	1121308
	SMARTwire™ - 6 Ga. - Plug x 1/4" Terminal - 12'	1127089
	ENCODER WIRE ASSEMBLY	
4	Encoder Wire Assembly - 18 Ga. - 2'6"	1132142
	Encoder Wire Assembly - 18 Ga. - 6'4"	1706853
5	Encoder Wire Ext - 18 Ga. - M x F - 8'	1128818
	Encoder Wire Ext - 18 Ga. - M x F - 16'	1129903
	Encoder Wire Ext - 18 Ga. - M x F - 24'6"	1123068
	Encoder Wire Ext - 18 Ga. - M x F - 30'	1131256
	PARTS	
6	Motor-Rev Solenoid 12V - 2 Pt Mnt - Black Wire	1703845
7	ShurLink™ Receiver Base	1706768
8	Cable Tie - 8"	1703231
9	ShurLink™ Receiver Cover w/Gasket - Express	1132194
	ShurLink™ Receiver Cover w/Gasket - Non-Express	1132195
10	Solenoid Cover Gasket - 1/8"	1704309
11	Wire - 18 Ga. x .25" Ring - Black	1705428
12	Wire Clip - 3/4" ID	1702108
13	Self-Tapping Screw - 1/4" x 1"	1704338
14	Dielectric Connector Protector	*1704378

*These items are not shown in the drawings.

Table of Contents

Replacement Parts

REMOTES

	DESCRIPTION	P/N
1	ShurLink EZR™ Remote	1131576
2	Carabiner Key Strap	1704569
3	ShurLink PRO™ Remote -Cradle/Charging Cbl.	1131575
4	ShurLink™ Charging Cable USB - A-Male to C-Male - 3'	1706836
5	ShurLink PRO™ Remote Cradle	1131764

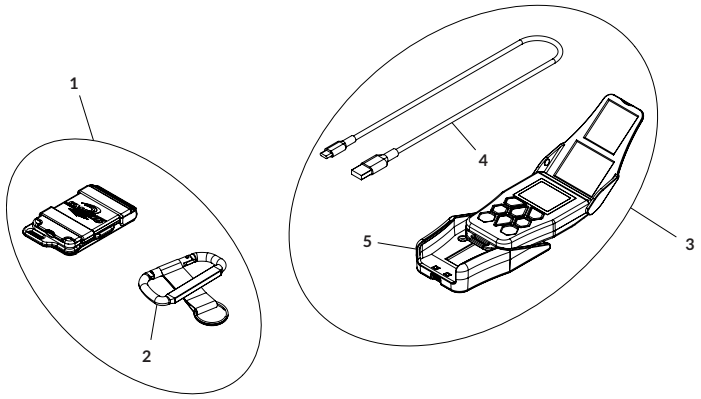

MOTORS

	DESCRIPTION	WARRANTY	P/N
	QUICK-FLIP4™		
	+ DURABUILT™		
1	Direct-Drive Motor - 900 Watt -12V	3-Year	1704878
2	Motor Cover - Chrome - 1 Pc.		1811884
	Motor Cover - Black - 1 Pc.		1804950
	4500 MOTOR		
	+ 4500 SERIES HD		
3	4500 HD Motor	3-Year	1120967
4	Motor Cover Kit - Black		1121659
	Motor Cover Kit - Chrome		1128340
	APEX™ MOTOR		
	+ APEX™		
5	Ironside II™/Apex™ Motor	3-Year	1127091
6	Motor Cover Kit - Apex™		1811880

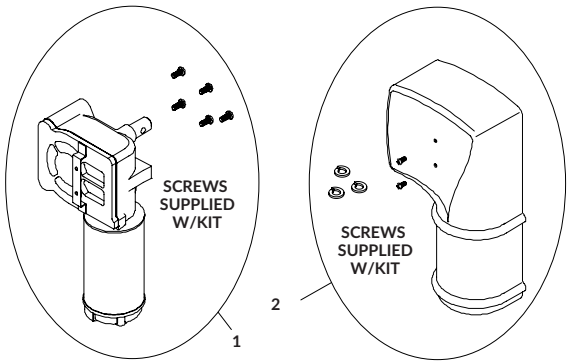

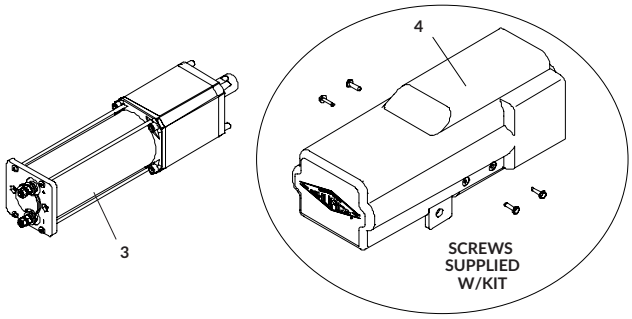

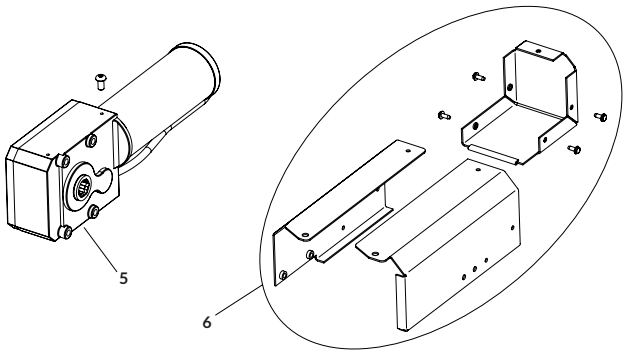

Table of Contents

Replacement Parts

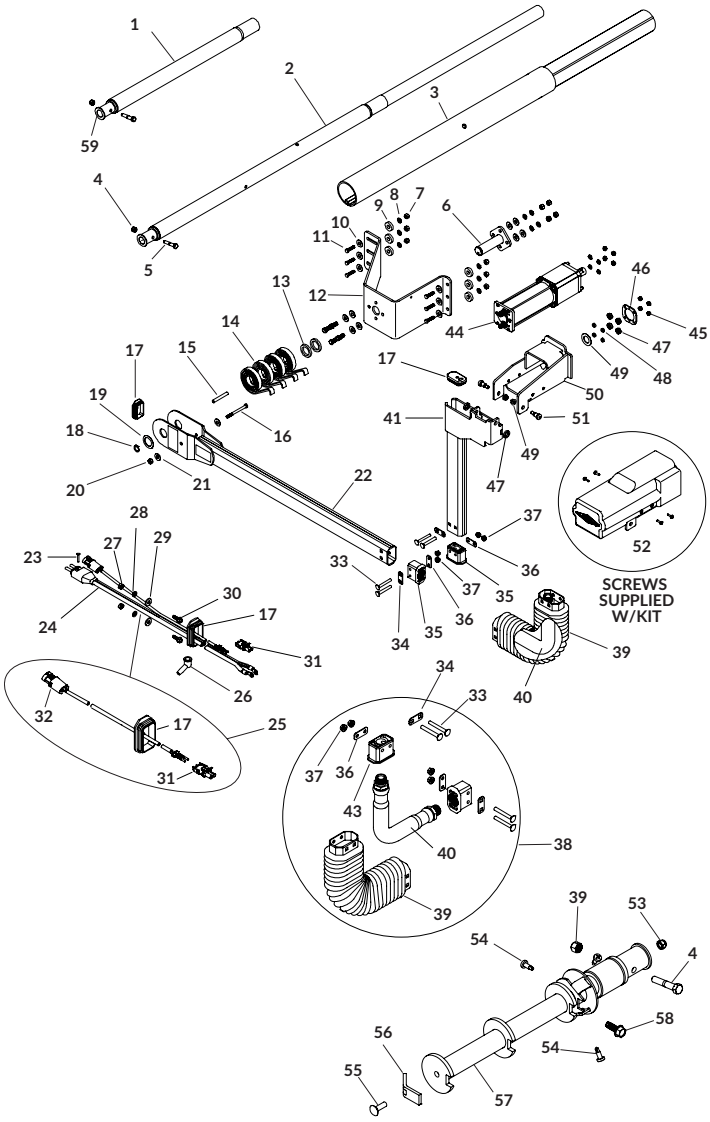

	DESCRIPTION	P/N
33	Carriage Bolt - 5/16" x 2-1/2" - GR5	1701455
34	Bellow Plate - Square Holes	1121414
35	End Fitting	1704891
36	Bellow Plate - Round Holes	1121413
37	Flanged Nylon Lock Nut - 5/16"	1704931
38	Flex Arm Joint Kit - 4500 HD	1125154
39	Arm Bellow	1704775
	PARTS	
40	Flex Arm Joint	1706825
41	Upper Flex Arm - Front	1121289
42	Upper Arm Spacer	1120677
43	Top Lock Flange Nut - 3/8"	1701283
44	4500 HD Motor	1120967
45	Nylon Lock Hex Nut - 1/4"	1701543
46	Motor Mount Bearing Retainer	1128243
47	Radial Ball Bearing - 1/4" x 3/4"	1704736
48	Motor Mount Bearing Spacer	1120680
49	Motor Spacer	1120679
50	4500 HD Motor Mount - 7-1/4"	1120776
	4500 HD Motor Mount - 9-1/4"	1120662
51	Shoulder Bolt - 3/8" x 1/2"	1704778
52	Motor Cover Kit - Black	1121659
	Motor Cover Kit - Chrome	1128340
53	Nylon Lock Nut - 5/16"	1704297
54	Self-Drilling Screw - 1/4" x 1"	1705198
55	Carriage Bolt - 5/16" x 1" - GR5	1704237
56	Cartridge Clamp	1118194
57	4500 HD Drive Shaft - 3"	1122264
58	Self-Tapping Screw - 3/8" x 1"	1700400
59	Roll Tube Drive Shaft - 4500HD	1120645

FRONT ARM ASSEMBLIES

	DESCRIPTION	P/N
	KITS & HARDWARE	
	Front Flex Arm Kit w/Motor - 9-1/4" [Includes: B; 18; 19; 41; 44; 2 of 13, 42, 43 & 51; 4 of 14; w/wiring plate]	1124094
	Front Flex Arm Kit w/Motor - 7-1/4" [Includes: B; 18; 19; 41; 44; 2 of 13, 42, 43 & 51; 4 of 14; w/wiring plate]	1124095
	Pivot Mount Bracket Kit - 6" x 7-1/4" [Includes: F; 6; 12]	1132515
	Pivot Mount Bracket Kit - 6" x 9-1/4" [Includes: F; 6; 12]	1132516
	Electric Drive Shaft Kit - 3" [Includes: H; 57]	1122880
A	Flex Arm Joint Kit - 4500 HD [Includes: 39; 40; 2 of 34, 35 & 36; 4 of 33 & 37]	1125154
B	Front Flex Arm Kit w/o Motor - w/o Wiring Plate [Includes: A; J; 15; 16; 17; 20; 22; 32; 34; 36; 41; 2 of 21 & 26]	1125610
C	Flex Arm Joint Hdw [Includes: 34; 36; 2 of 33 & 37]	1121702
D	Spring Support Hdw [Includes: 15; 16; 18; 19; 20; 2 of 13 & 21]	1116926
E	Motor Mount Hdw [Includes: 4; 5; 46; 49; 4 of 45, 47 & 48]	1120977
F	Pivot Bracket Hdw - 6" Vertical [Includes: 6 of 9; 10 of 11, 7 & 8; 14 of 10]	1121579
G	Pivot Bracket Hdw - End Dump [Includes: 4 of 11 & 58; 8 of 7 & 8; 12 of 10]	1117007
H	Drive Shaft Hdw - 3" [Includes: 4; 5; 53; 55; 56; 58; 3 of 54]	1131569
	PARTS	
J	SMARTwire™ Assy - 6 Ga. - Plug x 1/4" Terminal x 10'9"	1125612
1	Roll Tube Extension w/Drive Shaft - 34.43"	1120697
	Roll Tube Extension w/Drive Shaft - 45.37"	1120698
2	Roll Tube Extension w/Drive Shaft - End Dump	1120699
3	Roll Tube Extension - 3" x 45"	1124901
4	Nylon Lock Nut - 3/8"	1701580
5	Hex Head Cap Screw - 3/8" x 2"	1704264
6	Pivot Pin - 4 Spring	1116920
7	Hex Nut - 3/8"	1700407
8	Lock Washer - 3/8"	1700434
9	Spacer Washer - 1/4" x 1" OD x .406"	1120291
10	Flat Washer - 3/8"	1700429
11	Hex Head Cap Screw - 3/8" x 1-1/4"	1702891
12	Pivot Mnt Bracket - 6" x 7-1/4"	1121582
	Pivot Mnt Bracket - 6" x 9-1/4"	1121578
	Pivot Mnt Bracket - 6” x 10-1/4”	1124678
13	Spacer Washer - 1/4" x 1.81 OD x 1.28"	1118318
14	Spiral Torsion Spring	1111027
15	Spacer Tube - .35" x 2-5/8"	1117033
16	Hex Head Cap Screw - 5/16" x 3-1/2"	1201022
17	Cap Plug w/Hole	1704893
18	Flat Washer - 1-1/4" x 1-7/8"	1702890
19	Retaining Ring - 1-1/4"	1702888
20	Nylon Lock Hex Nut - 5/16"	1700419
21	Flat Washer - 5/16"	1700428
22	Lower Flex Arm w/Warning Decals - Front	1121617
23	Harness Lock Pin - 1/4" x 7/8"	1704751
24	SMARTwire™ - 6 Ga. - Plug x 1/4" Terminal x 10'9"	1704987
25	Encoder Wire - 18 Ga. - 10'6"	1121998
26	Rubber Insulating Boot	1704330
27	Hex Nut - 1/4"	1700408
28	Lock Washer - 1/4"	1700436
29	Flat Washer - 1/4"	1700427
30	Self-Tapping Screw - 1/4" x 3/4"	1700403
31	WeatherPack™ - Cavity Plug	1704799
32	WeatherPack™ - Tower	1704798

REAR ARM ASSEMBLIES

	DESCRIPTION	P/N
	KITS & HARDWARE	
	Rear Flex Arm Kit [Includes: B; C; D; 13; 17; 23; 24; 2 of A, 4 of 9]	1123929
	Rear Flex Arm Kit - 3" [Includes: B; C; E; 13; 17; 23; 24; 2 of A, 4 of 9]	*1129457
	Pivot Mount Bracket Kit - 6" x 7-1/4" [Includes: F; 4; 7]	1132515
	Pivot Mount Bracket Kit - 6" x 9-1/4" [Includes: F; 4; 7]	1132516
	Flex Arm Joint Kit - 4500 HD [Includes: 23; 24; 2 of 19, 20, 21, 4 of 18 & 22]	1125154
A	Flex Arm Joint Hdw [Includes: 19; 21; 2 of 18 & 22]	1121702
B	Spring Support Hdw [Includes: 10; 11; 14; 15; 19; 2 of 8 & 12]	1116926
C	Exposed Spline/Bearing Hdw [Includes: 27; 28; 2 of 16, 20 & 29; 4 of 22 & 26]	1121723
D	Rear Arm Collar Hdw [Includes 28; 2 of 29]	1127149
E	Rear Arm Collar Hdw - 3" [Includes 28; 2 of 29]	*1127150
F	Pivot Bracket Hdw - 6" Vertical [Includes: 6 of 5; 10 of 1, 2 & 6; 14 of 3]	1121579
	PARTS	
1	Hex Nut - 3/8"	1700407
2	Lock Washer - 3/8"	1700434
3	Flat Washer - 3/8"	1700429
4	Pivot Pin - 4 Spring	1116920
5	Spacer Washer - 1/4" x 1" OD x .406"	1120291
6	Hex Head Cap Screw - 3/8" x 1-1/4"	1702891
7	Pivot Mnt Bracket - 6" x 7-1/4"	1121582
	Pivot Mnt Bracket - 6" x 9-1/4"	1121578
	Pivot Mnt Bracket - 6₆ x 10-1/4₆	1124678
8	Spacer Washer - 1/4" x 1.81 OD x 1.28"	1118318
9	Spiral Torsion Spring	1111027
10	Spacer Tube - .35" x 2-5/8"	1117033
11	Hex Head Cap Screw - 5/16" x 3-1/2"	1201022
12	Flat Washer - 5/16"	1700428
13	Nylon Lock Hex Nut - 5/16"	1700419
14	Flat Washer - 1-1/4" x 1-7/8"	1702890
15	Retaining Ring - 1-1/4"	1702888
16	Cap Plug	1704892
17	Lower Flex Arm w/Warning Decals - Rear	1121294
18	Carriage Bolt - 5/16" x 2-1/2" - GR5	1701455
19	Bellow Plate - Square Holes	1121414
20	End Fitting	1704891
21	Bellow Plate - Round Holes	1121413
22	Flanged Nylon Lock Nut - 5/16"	1704931
23	Flex Arm Joint	1706825
24	Arm Bellow	1704775
25	Upper Flex Arm - Bearing	1121293
	Upper Flex Arm - Bearing - 3"	*1124796
26	Shoulder Bolt - 3/8" x 2" Thread x 5/16" x 1/2"	1704943
27	Bearing Mount Box	1121430
	Bearing Mount Box - 3"	*1123248
28	Rear Arm Bearing Ring	1704942
	Rear Arm Bearing Ring - 3"	*1705160
29	Blind Rivet - 3/16"	**1706103

*Used with 3" roll tubes.
**Used with both 2" and 3" roll tubes.

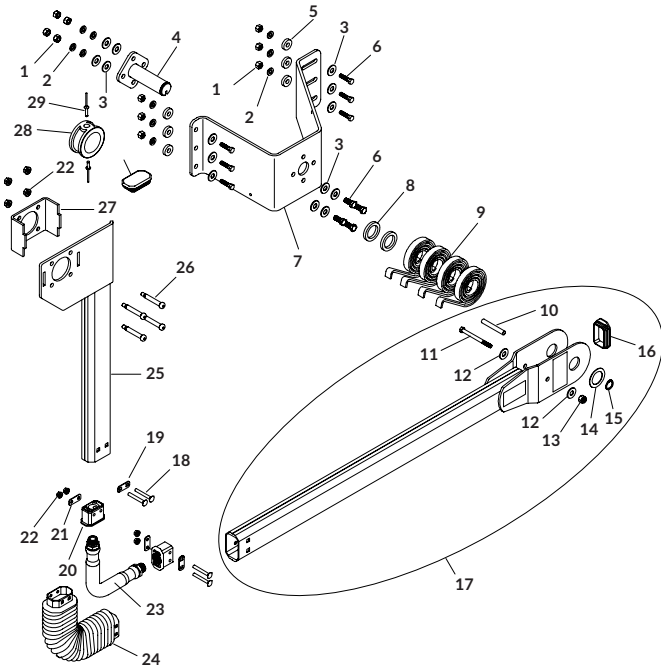

Table of Contents

Replacement Parts

REAR SIDE HINGE ASSEMBLIES

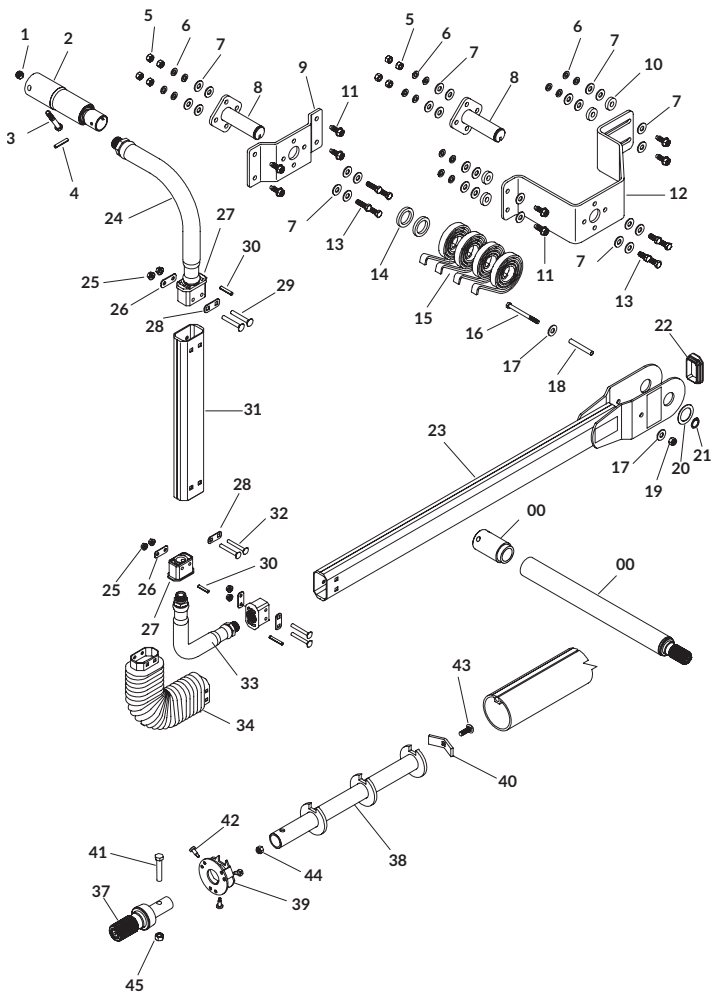

	DESCRIPTION	P/N
	KITS & HARDWARE	
	Rear Flex Arm Kit - Side Hinge - No Manual Override) [Includes: B; C; 2; 22; 23; 24; 31; 33; 34; 2 of A, 27 & 30; 4 of 15]	1130902
	Pivot Mount Bracket Kit - 4" x 7-1/4" [Includes: D; 8; 12]	1132517
	Pivot Mount Bracket Kit - 4" x 9-1/4" [Includes: D; 8; 12]	1132518
	Flex Arm Joint Kit w/Alum. Fittings - 4500 HD [Includes: 33; 34; 2 of 26, 27, 28, 30; 4 of 25 & 32]	1128831
	Manual Override Extension Kit [Includes: 35; 36]	1117022
	Manual Crank Kit - 3" [Includes: F; 29; 37; 38]	1122879
A	Flex Arm Joint Hdw [Includes: 26; 28; 2 of 25 & 32]	1121702
B	Spring Support Hdw [Includes: 16; 18; 19; 20; 21; 2 of 14 & 17]	1116926
C	Rear Flex Arm Hdw - Side Hinge [Includes: 1; 3; 4; 26 & 28; 2 of 25 & 29]	1121737
D	Pivot Bracket Hdw - 4" Vertical [Includes: 4 of 10; 8 of 5, 6 & 13; 12 of 7]	1116946
E	Pivot Bracket Hdw - Side Hinge [Includes: 4 of 11; 8 of 5, 6 & 13]	1117911
F	Drive Shaft Hdw - 3" [Includes: 11; 40; 41; 43; 44; 45; 3 of 42]	1131569
	PARTS	
1	Centerlock Hex Nut - 3/8"	1700418
2	Roll Tube Bearing Pack	1117777
3	Hex Head Cap Screw - 3/8" x 2-1/2"	1702573
4	Spring Pin - 1/4" x 1-1/2"	1700445
5	Hex Nut - 3/8"	1700407
6	Lock Washer - 3/8"	1700434
7	Flat Washer - 3/8"	1700429
8	Pivot Pin - 4 Spring	1116920
9	Pivot Mnt Bracket - 4" x 1-1/4"	1117767
10	Spacer Washer - 1/4" x 1" OD x .406"	1120291
11	Self-Tapping Screw - 3/8" x 1"	1700400
12	Pivot Mnt Bracket - 4" x 7-1/4"	1116919
	Pivtot Mount Bracket - 4" x 9-1/4"	1117031
	Pivtot Mount Bracket - 4₆ x 10-1/4₆	1129155
13	Hex Head Cap Screw - 3/8" x 1-1/4"	1702891
	Hex Head Cap Screw - 3/8" x 3"	1700371
14	Spacer Washer - 1/4" x 1.81 OD x 1.28"	1118318
15	Spiral Torsion Spring	1111027
16	Hex Head Cap Screw - 5/16" x 3-1/2"	1201022
17	Flat Washer - 5/16"	1700428
18	Spacer Tube - .35" x 2-5/8"	1117033
19	Nylon Lock Hex Nut - 5/16"	1700419
20	Flat Washer - 1-1/4" x 1-7/8"	1702890
21	Retaining Ring - 1-1/4"	1702888
22	Cap Plug	1704892
23	Lower Flex Arm w/Warning Decals - Rear	1121294
24	Upper Flex Arm Joint - Side Hinge	1121680
25	Flanged Nylon Lock Nut - 5/16"	1704931
26	Bellow Plate - Round Holes	1121413
27	End Fitting	1704891
	End Fitting - Aluminum	1706260
28	Bellow Plate - Square Holes	1121414
29	Carriage Bolt - 5/16" x 2-1/4" - GR5	1704971
30	Spring Pin - 1/4" x 1-3/8"	1704966
31	Upper Flex Arm - Side Hinge	1121738
32	Carriage Bolt - 5/16" x 2-1/2" - GR5	1701455
33	Flex Arm Joint	1706825
34	Arm Bellow	1704775
35	Manual Override Spline Connector	1117020
36	Manual Override Spline Assy	1117023
37	Manual Crank Spline - 3"	1121111
38	Rear Cartridge	1121039

	DESCRIPTION	P/N
39	Roll Tube End Cap - Rear	1121040
40	Cartridge Clamp	1118194
41	Hex Head Cap Screw - 3/8" x 2"	1704264
42	Self-Drilling Screw - 1/4" x 1"	1705198
43	Carriage Bolt - 5/16" x 1" - GR5	1704237
44	Nylon Lock Nut - 5/16"	1704297
45	Nylon Lock Nut - 3/8"	1701580

REAR TOP HINGE ASSEMBLIES

	DESCRIPTION	P/N
	KITS & HARDWARE	
	Rear Flex Arm Kit - Top Hinge No Manual Override [Includes: B; C; 17; 20; 25; 28; 31; 33; 34; 2 of A; 4 of 9]	1126477
	Pivot Mount Bracket Kit - 4" x 7-1/4" [Includes: D; 4; 5]	1132517
	Pivot Mount Bracket Kit - 4" x 9-1/4" [Includes: D; 4; 5]	1132518
	Flex Arm Joint Kit w/Alum. Fittings - 4500 HD [Includes: 34; 35; 2 of 27, 28, 29 & 31]	1128831
	Manual Override Extension Kit [Includes: 35; 36]	1117022
	Manual Crank Kit - 3" [Includes: F; 37; 38; 39]	1122879
A	Flex Arm Joint Hdw [Includes: 27; 29; 2 of 26 & 30]	1121702
B	Spring Support Hdw [Includes: 10; 12; 13; 14; 15; 2 of 8 & 11]	1116926
C	Extension Hdw - Gate Flex™ [Includes: 13; 18; 19; 22; 28; 32; 2 of 16, 21, 23 & 24]	1121736
D	Pivot Bracket Hdw - 4" Vertical [Includes: 8 of 1, 2 & 7; 12 of 3]	1116946
E	Pivot Bracket Hdw - End Dump [Includes: 4 of 6 & 7; 8 of 1 & 2; 12 of 3]	1117007
F	Drive Shaft Hdw - 3" [Includes: 6; 21; 24; 40; 43; 44]	1131569
	PARTS	
1	Hex Nut - 3/8"	1700407
2	Lock Washer - 3/8"	1700434
3	Flat Washer - 3/8"	1700429
4	Pivot Pin - 4 Spring	1116920
5	Pivot Mnt Bracket - 4" x 7-1/4"	1116919
	Pivot Mount Bracket - 4" x 9-1/4"	1117031
	Pivot Mount Bracket - 4₆ x 10-1/4₆	1129155
	Pivot Bracket - Sloped - Gate Flex™	1116994
6	Self-Tapping Screw - 3/8" x 1"	1700400
7	Hex Head Cap Screw - 3/8" x 1-1/4"	1702891
8	Spacer Washer - 1/4" x 1.81 OD x 1.28"	1118318
9	Spiral Torsion Spring	1111027
10	Hex Head Cap Screw - 5/16" x 3-1/2"	1201022
11	Flat Washer - 5/16"	1700428
12	Spacer Tube - .35" x 2-5/8"	1117033
13	Nylon Lock Hex Nut - 5/16"	1700419
14	Retaining Ring - 1-1/4"	1702888
15	Flat Washer - 1-1/4" x 1-7/8"	1702890
16	Cap Plug	1704892
17	Lower Flex Arm w/Warning Decals - Rear	1121294
18	Centerlock Hex Nut - 3/8"	1700418
19	Hex Head Cap Screw - 3/8" x 2-1/2"	1702573
20	Gate Flex™	1116990
	Gate Flex™ - Long	1118534
21	Nylon Lock Nut - 3/8"	1701580
22	Hex Head Cap Screw - 5/16" x 1 1/2"	1703487
23	Flange Bearing - 20mm - 2 Bolt	1704703
24	Hex Head Cap Screw - 3/8" x 2"	1704264
25	Upper Flex Arm - Gate Flex™	1121649
26	Flanged Nylon Lock Nut - 5/16"	1704931
27	Bellow Plate - Round Holes	1121413
28	End Fitting	1704891
	End Fitting - Aluminum	1706260
29	Bellow Plate - Square Holes	1121414
30	Carriage Bolt - 5/16" x 2-1/2" - GR5	1701455
31	Spring Pin - 1/4" x 1-3/8"	1704966
32	Spring Pin - 1/4" x 1-3/4"	1701360
33	Flex Arm Joint	1706825
34	Arm Bellow	1704775
35	Manual Override Spline Connector	1117020
36	Manual Override Spline Assy	1117023
37	Manual Crank Spline - 3"	1121111

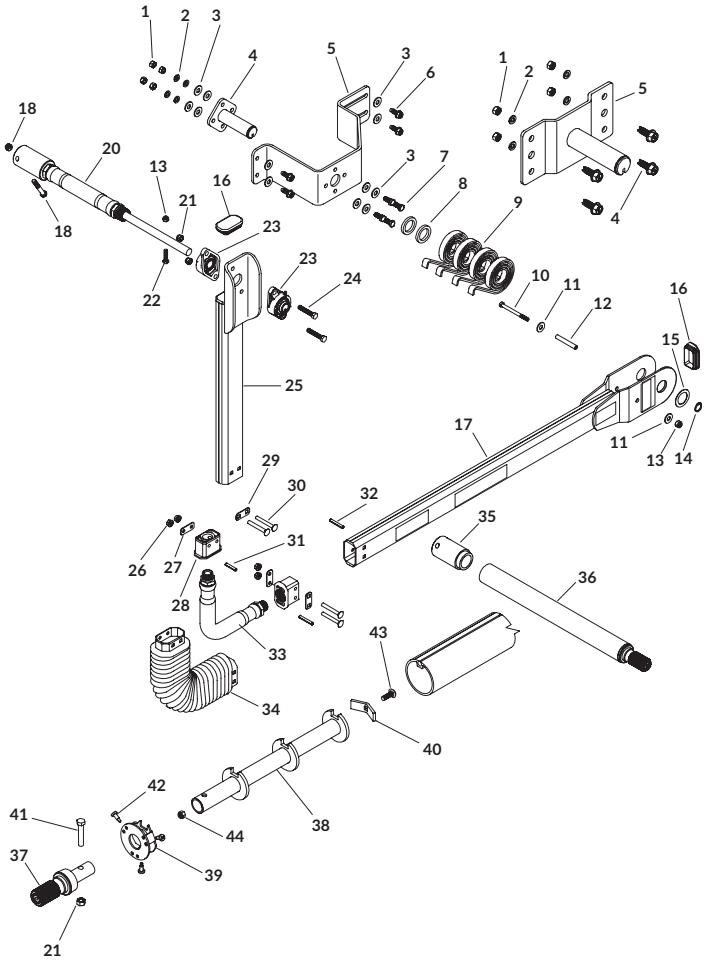

	DESCRIPTION	P/N
38	Rear Cartridge	1121039
39	Roll Tube End Cap - Rear	1121040
40	Cartridge Clamp	1118194
41	Hex Head Cap Screw - 3/8" x 2"	1704264
42	Self-Drilling Screw - 1/4" x 1"	1705198
43	Carriage Bolt - 5/16" x 1" - GR5	1704237
44	Nylon Lock Nut - 5/16"	1704297

PIVOT MOUNT BRACKETS

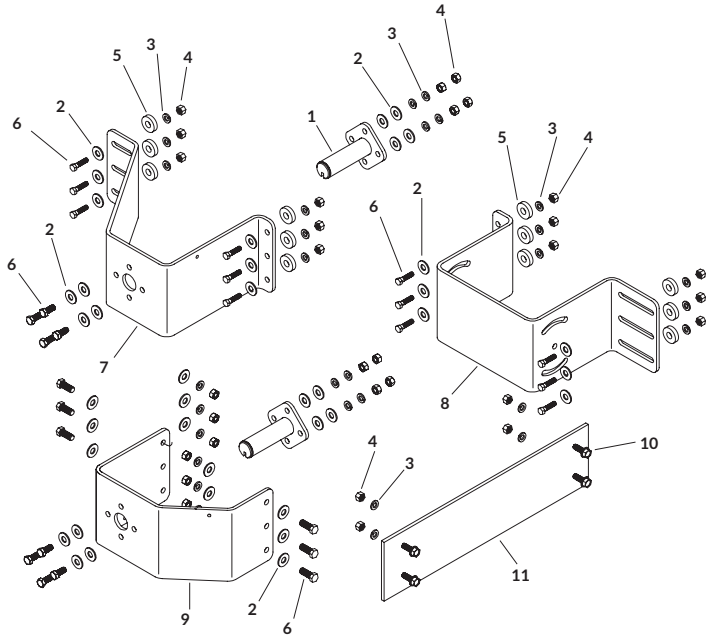

	DESCRIPTION	P/N
	KITS & HARDWARE	
	Pivot Mount Bracket Kit - 6" x 7-1/4" [Includes: A; 1; 7]	1132515
	Pivot Mount Bracket Kit - 6" x 9-1/4" [Includes: A; 1; 7]	1132516
	Pivot Mount Bracket Kit - 6" x 6" Standoff [Includes: B; 1; 8; 9]	1132519
	Pivot Mount Bracket Kit - 6" x 8" Standoff [Includes: B; 1; 8; 9]	1132520
A	Pivot Bracket Hdw - 6" Vertical [Includes: 6 of 5; 10 of 6, 3 & 4; 14 of 2]	1121579
B	Pivot Bracket Hdw - 6" Sloped [Includes: 6 of 5; 16 of 6, 3 & 4; 26 of 2]	1121580
	PARTS	
1	Pivot Pin - 4 Spring	1116920
2	Flat Washer - 3/8"	1700429
3	Lock Washer - 3/8"	1700434
4	Hex Nut - 3/8"	1700407
5	Spacer Washer - 1/4" x 1" OD x .406"	1120291
6	Hex Head Cap Screw - 3/8" x 1-1/4"	1702891
7	Pivot Mnt Bracket - 6" x 7-1/4"	1121582
	Pivot Mnt Bracket - 6" x 9-1/4"	1121578
	Pivot Mnt Bracket - 6" x 10-1/4"	1124678
	Pivot Mnt Bracket - 6" x 12-1/4"	1121517
8	Pivot Mnt Bracket - 6" x 6" - Sloped	1121993
	Pivot Mnt Bracket - 6" x 8" - Sloped	1121994
	Pivot Mnt Bracket - 6" x 10" - Sloped	*1121995
9	Pivot Bracket - Sloped 6"	1121992
10	Self-Tapping Screw - 3/8" x 1"	1700400
11	Pivot Backer Plate - 7" x 16"	1121583
	Pivot Backer Plate - 7" x 20"	1121584
	Pivot Backer Plate - 7" x 24"	1122040

*Used on trailers with long, flat sloped front or rear.

RETURNS - HEAVY-DUTY REAR CABLE

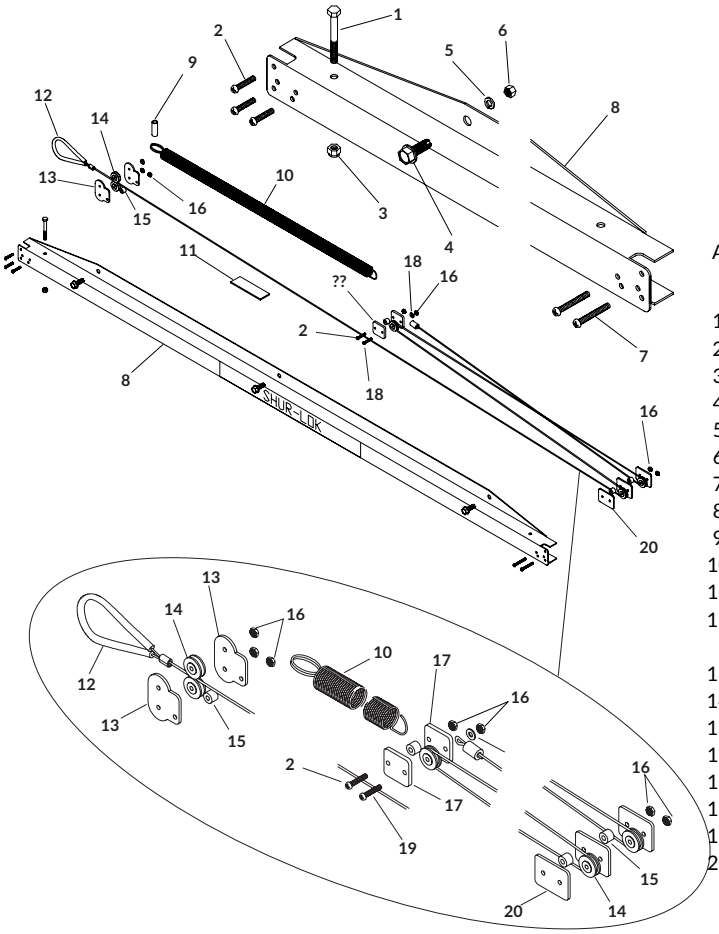

	DESCRIPTION	P/N
	KITS & HARDWARE	
	HD Rear Cable Return Kit [Includes: A; 1; 8; 9; 10; 11; 12; 18; 19; 2 of 7, 13 & 17; 3 of 20; 4 of 2 & 15; 5 of 14; 7 of 16]	1113025
	HD Rear Cable Return Kit - 3" [Includes: A; 1; 8; 9; 10; 11; 12; 18; 19; 2 of 7, 13 & 17; 3 of 20; 4 of 2 & 15; 5 of 14; 7 of 16]	*1124868
A	Cable Return Mounting Hdw [Includes: 3 of 4, 5 & 6]	1111469
	PARTS	
1	Hex Head Cap Screw - 1/4" x 2-1/4"	1702672
2	Machine Screw - 1"	1702654
3	Nylon Lock Hex Nut - 1/4"	1701543
4	Self-Tapping Screw - 3/8" x 1"	1700400
5	Lock Washer - 3/8"	1700434
6	Hex Nut - 3/8"	1700407
7	Machine Screw - 1-1/2"	1702656
8	Universal Cable Return Housing	1114728
9	Spacer Washer - 1-9/16"	1131010
10	Heavy-Duty Extension Spring	1702896
11	Velcro® Hook - 1" x 4"	1115206
12	Cable w/Return Strap	1114582
	Cable w/Return Strap - 3"	*1124870
13	Front Retainer Plate	1114691
14	Pulley - 1/16" Cable Groove	1703006
15	Plastic Spacer - 3/8"	1111056
16	Machine Screw Nut	1702653
17	Rope Block Retainer Plate	1112997
18	Flat Washer - #10	1111054
19	Machine Screw - 1-1/4"	1702655
20	Rear Retainer Plate	1110913

*Used with 3" roll tubes.

RETURNS - HEAVY-DUTY REAR SHUR-RETURN™

	DESCRIPTION	P/N
	KITS & HARDWARE	
	HD Shur-Return™ Kit [Includes: A & Tube Assy]	*1125119
	HD 2-Piece Shur-Return™ Kit [Includes: A; 7; 8; 9; 4 of 11 & Tube Assy]	*1125121
	HD Shur-Return™ Kit - 3" [Includes: B & Tube Assembly]	* **1125123
	HD 2-Piece Shur-Return™ Kit - 3" [Includes: B; 7; 8; 9; 4 of 11 & Tube Assy]	* **1125125
A	Shur-Return™ Hdw [Includes: 1; 2; 3; 4; 5; 5 of 6]	1107128
B	Shur-Return™ Hdw - 3" [Includes: 1; 2; 3; 4; 5; 3 of 11; 5 of 6]	**1124881
	PARTS	
1	Nylon End Plug	1100138
2	Eyebolt Anchor - 5/16"	1700717
3	Nylon Lock Hex Nut - 5/16"	1700419
4	Hex Nut - 5/16"	1700411
5	Self-Drilling Screw - #10-16 x 1/2"	1704743
6	Self-Tapping Screw - 1/4" x 1/2"	1700736
7	Spring Retainer Plug	1100827
8	Connector Sleeve	1107879
9	Shur-Return™ Rope - 12'	1100826
10	Hex Socket Set Screw - #10-32 x 3/16"	1701423
11	Self-Drilling Screw - 1/4" x 1"	**1705198

*Additional over length shipping charges apply.
**Used with 3" roll tubes.

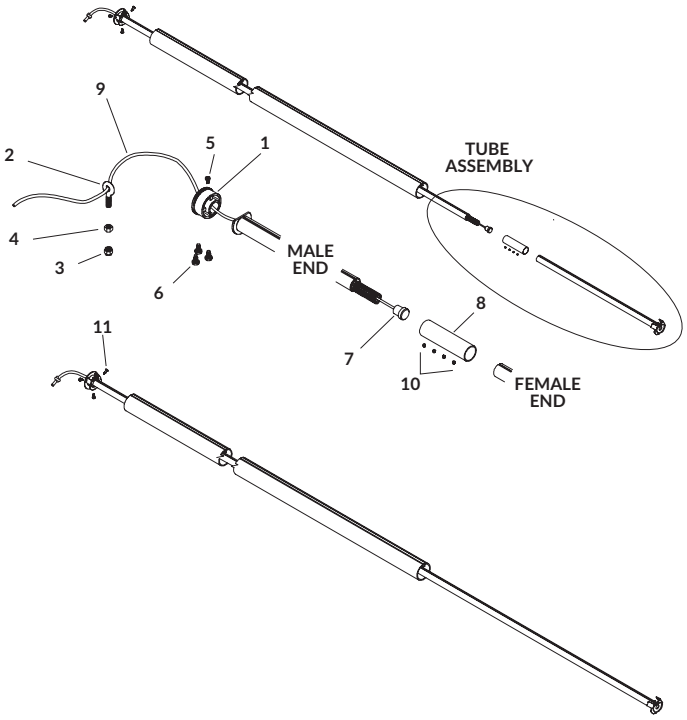

RETURNS - SHUR-STRAP

	DESCRIPTION	P/N
	KITS & HARDWARE	
	Shur-Strap™ Return Kit [Includes: A; 1]	**1127295
	Shur-Strap™ Return Kit - 3" [Includes: B; 1]	*,**1127491
A	Shur-Strap™ Return Hdw	1127296
B	Shur-Strap™ Return Hdw - 3"	*1127297
	PARTS	
1	Shur-Strap™ Return Assy - 12'-7"	**1127286
2	Replacement Webbing w/Connector Link	1128566

*Additional over length shipping charges apply.
**Used with 3" roll tubes.

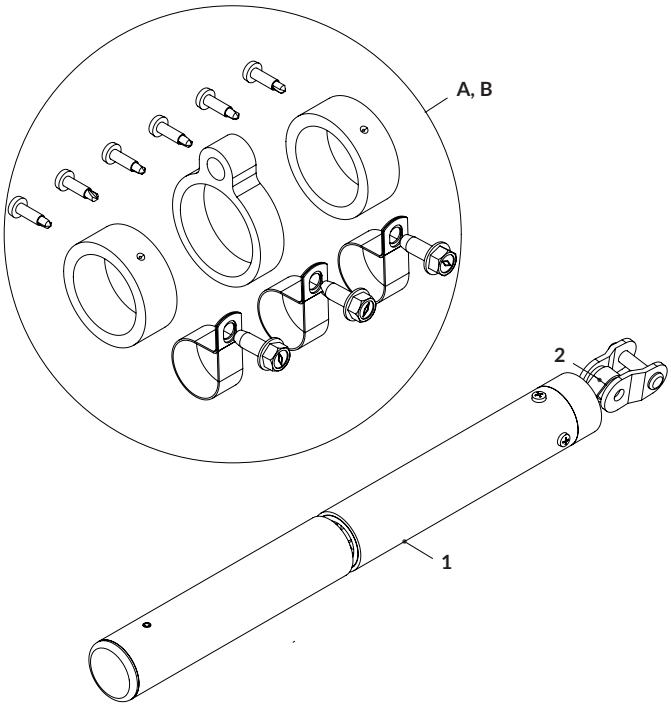

Table of Contents

Replacement Parts

PIVOT ASSEMBLY

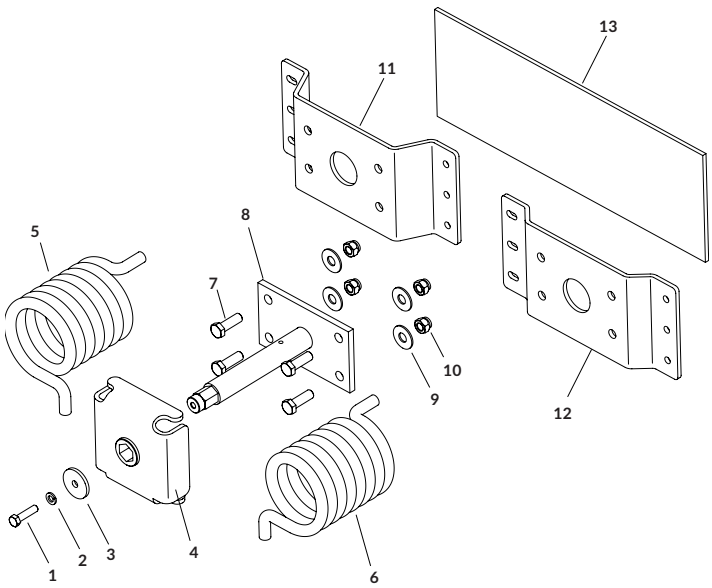

	DESCRIPTION	P/N
	PARTS	
1	Cap Screw - 3/8" x 1-1/2"	1705910
2	Lock Washer - 3/8"	1705909
3	Spring Catch Retaining Washer - Black	1126983
4	Spring Catch	1126799
5	Torsion Spring - Red - R	1705829
6	Torsion Spring - Black - L	1705828
7	Cap Screw - 1/2" x 1-1/2"	1705920
8	Spring Pivot Shaft	1126819
9	Flat Washer - 1/2"	1705911
10	Nylon Lock Nut - 1/2"	1705913
11	Pivot Mnt Bracket - 6" x 2-1/4"	1810205
12	Pivot Mnt Bracket - 6" x 1-1/4"	1810204
13	Pivot Backer Plate - 7" x 20"	1121584

FRONT ARM ASSEMBLIES

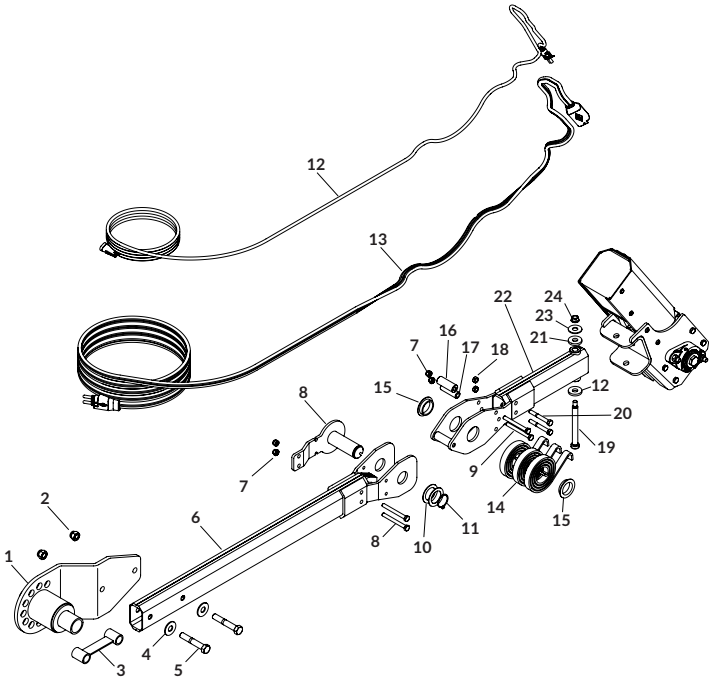

	DESCRIPTION	P/N
	KITS	
	Front Arm Kit w/Motor [Includes: 1; 3; 6; 8; 11; 12; 13; 16; 17; 19; 22; 23; 24; 25; 2 of 2, 4, 5, 10, 15, 18, 20 & 21; 3 of 14; 4 of 7 & 9]	1810160
	Front Arm Kit w/Motor - Reverse Roll [Includes: 1; 3; 6; 8; 11; 12; 13; 16; 17; 19; 22; 23; 24; 25; 2 of 2, 4, 5, 10, 15, 18, 20 & 21; 3 of 14; 4 of 7 & 9]	1810211
	PARTS	
1	Spring Pivot	1126794
2	Nylon Lock Hex Nut - 1/2"	1702115
3	Dog Bone Spacer	1810181
4	Flat Washer - 1/2"	1702114
5	Hex Head Cap Screw - 1/2" x 3"	1702701
6	Lower Arm - Front	1810158
7	Nylon Lock Hex Nut - 5/16"	1700419
8	Pivot Pin - R	1810179
9	Hex Head Cap Screw - 5/16" x 3"	1702629
10	Flat Washer - 1-1/4" x 1-7/8"	1702890
11	Retaining Ring - 1-1/4"	1702888
12	Encoder Wire - 13'-6"	1705807
13	SMARTwire™ - 6 Ga. - Plug/Socket - 16'	1704827
14	Spiral Torsion Spring	1111027
15	Flange Bushing - 1.281" ID x 1.522" OD	1704468
16	Elbow Stop Tube	1810201
17	Spacer Tube - .35" ID x 2"	1810144
18	Nylon Lock Nut - 5/16"	1704454
19	Shoulder Bolt - 1/2" x 4-1/4" Thread - 3/8" x 5/8"	1706616
20	Cap Screw - 5/16" x 2-1/2" - Grade 5	1706615
21	Plastic Washer - .1875" x 1.25" Round	1810184
22	Upper Arm - Front	1810162
23	Flat Washer - 7/16"	1700430
24	Top Lock Flange Nut - 3/8"	1701283

Table of Contents

Replacement Parts

MOTOR MOUNT ASSEMBLY

	DESCRIPTION	P/N
	KITS	
	Motor Cover Kit - Apex™ [Includes: 17; 18; 19; 4 of 20]	1811880
	PARTS	
1	Drive Shaft	1127572
2	Cap Screw - 3/8” x 1-3/4”	1705680
3	Nylon Lock Nut - 3/8"	1701580
4	Nylon Lock Nut - 3/8"	1705918
5	Flange Bearing - 7/8" Hex	1704456
6	Nylon Lock Nut - 5/16"	1705919
7	Carriage Bolt - 3/8" x 1-1/2" - GR2	1705917
8	Button Head Cap Screw - 1/4" x 5/8"	1703327
9	Motor Shim Plate - Outer	1810175
10	Motor Shim Plate - Inner	1810174
11	Motor Mount	1810164
12	Nylon Lock Nut - 5/16"	1705919
13	Locking Collar w/Ring - 7/8”	1810207
14	Motor Cover Support Bracket	1810173
15	Ironside II™/Apex™ Motor	1127091
16	Button Head Cap Screw - 5/16" x 5/8"	1706617
17	Motor Cover - Front Panel	1810168
18	Motor Cover - Back Panel	1810169
19	Motor Cover - End Cap	1810172
20	Flange Cap Screw - #10-24 x 1/2"	1704308

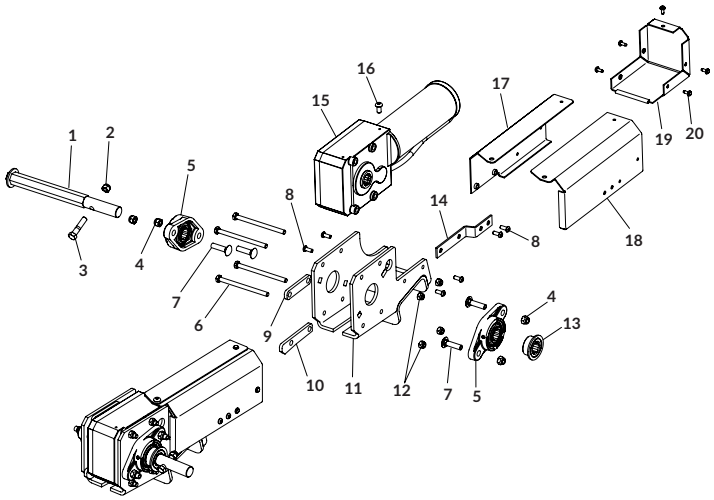

REAR ARM ASSEMBLIES

	DESCRIPTION	P/N
	KITS	
	Rear Arm Assy [Includes 1; 4; 8; 11; 13; 14; 15; 17; 18; 19; 23; 24; 2 of 5, 7, 9, 16, 20, 21 & 22; 3 of 10; 4 of 6 & 12; 12 of 2 & 3]	1810161
	Rear Arm Assy - Reverse Roll [Includes 1; 4; 8; 11; 13; 14; 15; 17; 18; 19; 23; 24; 2 of 5, 7, 9, 16, 20, 21 & 22; 3 of 10; 4 of 6 & 12; 12 of 2 & 3]	1810212
	PARTS	
1	Upper Arm Swivel Connector	1810200
2	Hex Head Cap Screw - 5/16" x 3/4"	1701045
3	Lock Washer - 5/16"	1700433
4	Rear Upper Arm	1810195
5	Nylon Lock Nut - 5/16"	1704454
6	Nylon Lock Hex Nut - 5/16"	1700419
7	Cap Screw - 5/16" x 2-1/2" - Grade 5	1706615
8	Spacer Tube - .35" ID x 2"	1810144
9	Flange Bushing - 1.281" ID x 1.522" OD	1704468
10	Spiral Torsion Spring	1111027
11	Elbow Stop Tube	1810201
12	Hex Head Cap Screw - 5/16" x 3"	1702629
13	Elbow Stop	1810178
14	Pivot Pin - L	1810193
15	Rear Lower Arm - Elbow	1810186
16	Flat Washer - 1-1/4" x 1-7/8"	1702890
17	Retaining Ring - 1-1/4"	1702888
18	Lower Arm Rotator	1810190
19	Lower Arm Tube - Rear - Pivot	1810185
20	Nylon Lock Hex Nut - 1/2"	1702115
21	Flat Washer - 1/2"	1702114
22	Hex Head Cap Screw - 1/2" x 3"	1702701
23	Dog Bone Spacer	1810181
24	Spring Pivot	1126794

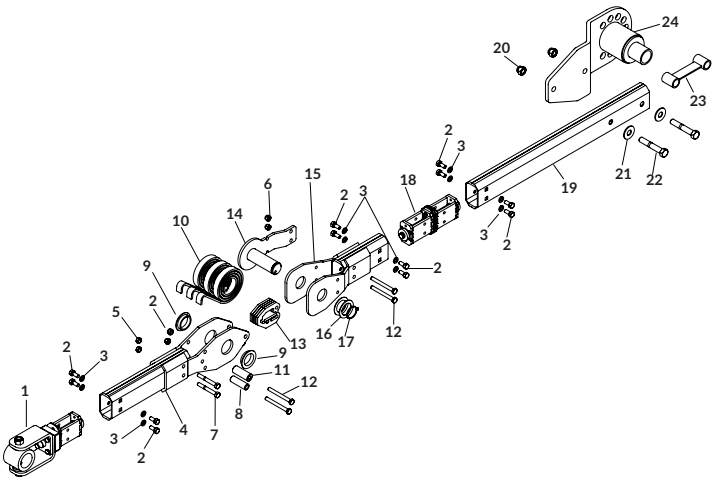

Table of Contents

Replacement Parts

REAR LIFT HINGE ASSEMBLIES

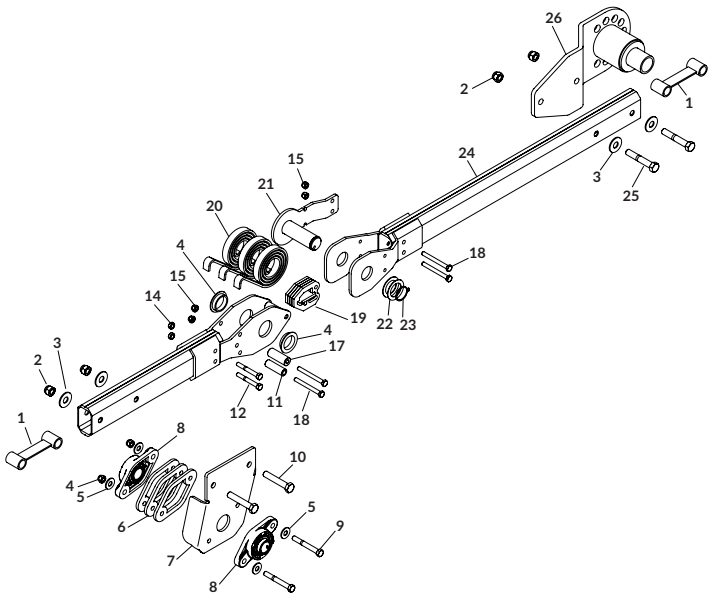

	DESCRIPTION	P/N
	KITS	
	Rear Arm Assy Lift Gate [Includes 7; 11; 13; 17; 19; 21; 23; 24; 26; 2 of 1, 4, 8, 9, 10, 12, 14, 16, 22 & 25; 3 of 6 & 20; 4 of 2, 3, 5 & 18]	1810215
	Rear Arm Assy Lift Gate - Reverse Roll [Includes 7; 11; 13; 17; 19; 21; 23; 24; 26; 2 of 1, 4, 8, 9, 10, 12, 14, 16, 22 & 25; 3 of 6 & 20; 4 of 2, 3, 5 & 18]	1810216
	PARTS	
1	Dog Bone Spacer	1810181
2	Nylon Lock Hex Nut - 1/2"	1702115
3	Flat Washer - 1/2"	1702114
4	Nylon Lock Nut - 3/8"	1701580
5	Flat Washer - 3/8"	1700429
6	Upper Arm Bearing Spacer Plate	1810338
7	Upper Arm Bearing Bracket	1810214
8	Flange Bearing - 1" OD - 2 Bolt	1119560
9	Hex Head Cap Screw - 3/8" x 3"	1700371
10	Hex Head Cap Screw - 1/2" x 2-3/4"	1704809
11	Spacer Tube - .35" ID x 2"	1810144
12	Cap Screw - 5/16" x 2-1/2" - Grade 5	1706615
13	Upper Arm - Rear - Lift Hinge	1810213
14	Nylon Lock Nut - 5/16"	1704454
15	Nylon Lock Hex Nut - 5/16"	1700419
16	Flange Bushing - 1.281" ID x 1.522" OD	1704468
17	Elbow Stop Tube	1810201
18	Hex Head Cap Screw - 5/16" x 3"	1702629
19	Elbow Stop	1810178
20	Spiral Torsion Spring	1111027
21	Pivot Pin - L	1810193
22	Flat Washer - 1-1/4" x 1-7/8"	1702890
23	Retaining Ring - 1-1/4"	1702888
24	Lower Arm - Front	1810158
25	Hex Head Cap Screw - 1/2" x 3"	1702701
26	Spring Pivot	1126794

ROLL TUBE ADAPTERS

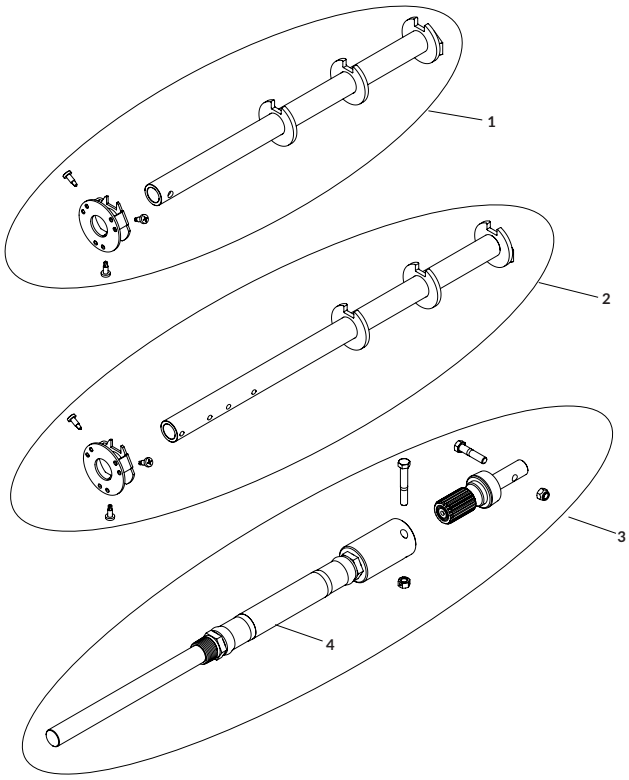

	DESCRIPTION	P/N
	KITS	
1	Cartridge Kit - 3" Alum - 20" Drive	1131389
2	Cartridge Kit - 3" Alum - 24.25" Drive	1131390
3	Flex Adapter Shaft Kit - Lift Gate	1131391
	PARTS	
4	Flex Adapter Shaft - Lift Gate	1810339

Table of Contents

Replacement Parts

BASE ASSEMBLIES

	DESCRIPTION	P/N
	Base Assy - Quick-Flip™ III [Includes: 3; 4; 6; 7; 8]	1801622
	Gantry Base Assy - Fixed [Includes: 1; 2]	1808652
1	Inner Stage Weldment - Fixed	1808655
2	Outer Stage Weldment - Fixed	1808653
3	Tower Inner Stage	1801621
4	Tower Outer Stage - Quick-Flip™ III	1801619
5	Hydraulic Fitting - 4MJIC x 3/8" x 90°	1800306
6	Cylinder - 1-1/2" x 42" x 1"	1800082
7	Hydraulic Fitting - 4MJ x 4MP x STR	1801017
8	Hydraulic Pressure Control Compensator - 1-3/4"	1801018
9	Hydraulic Fitting - 3/8MP x 90°	1801016
10	Mounting Channel	1800726
11	Mounting Angle	1801966

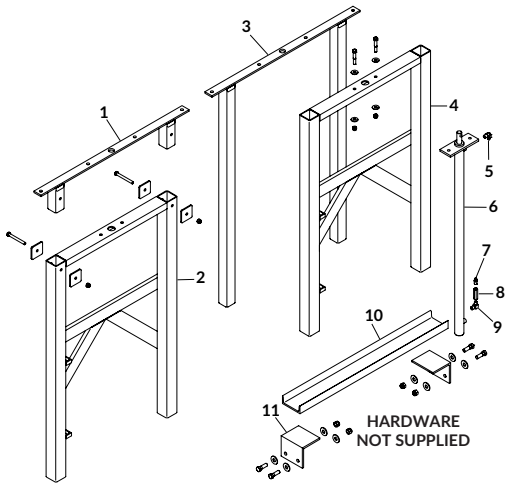

ELECTRICS

	DESCRIPTION	P/N
	Durabuilt™ Switch - 60 Amp - 12V "External Mount" [Includes: 1; 2; 3; 4; 7; 4 of 5; 6 of 6 & 8]	1809051
1	Solenoid Cover	1703896
2	Motor-Reversing Solenoid 12V - 2 Pt Mnt - Black Wire	1703845
3	Toggle Switch - On/Off Marine (RT)	1801726
4	Mounting Switch Plate	1801265
5	Ring Terminal - 8 Ga. x 1/4" Stud	1800430
6	Ring Terminal - 8 Ga. x 3/8" Stud - Battery	1801486
7	Circuit Breaker - 60 Amp	1800417
8	Ring Terminal - 4 Ga. x 3/8" Stud - Battery	*1800158

*These items are NOT shown in the drawing.

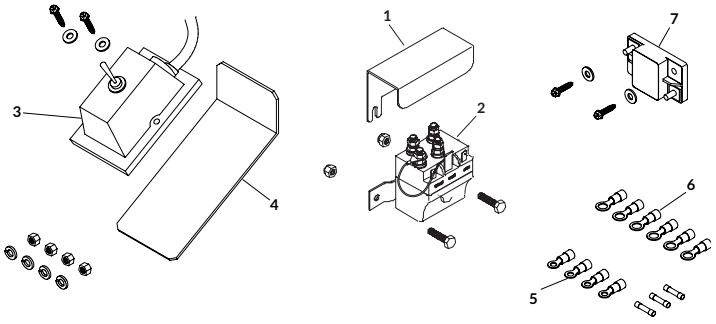

HOUSINGS

	DESCRIPTION	P/N
	Housing Assy [Includes: 1; 2; 3; 5; 6; 7; 6 of 4]	1808662
	Aluminum Roller Bar w/Shaft [Includes: 6; 7]	1800737
1	Housing	1800491
2	Reversed Bearing Flange	1801950
3	Direct-Drive Motor - 900 Watt - 12V	1704878
4	Selt-Threading Bolt - 5/16" x 1-1/4"	1800460
5	Housing Deflector - 105-3/4"	1800477
6	Tarp Spool Axle - 3-Way Attachment -98"	1809330
7	Shaft Extension - 3/4" x 4"	1800980

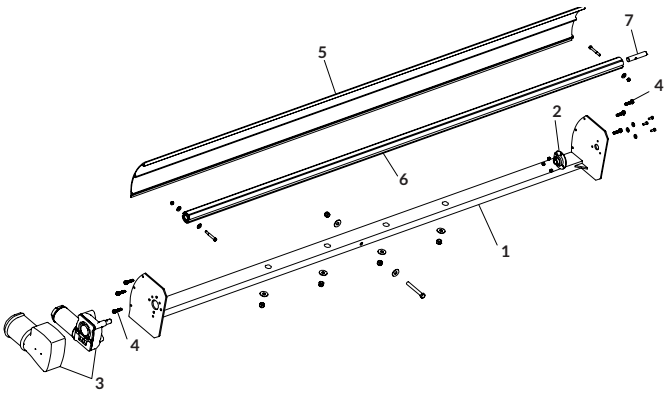

HYDRAULICS

	DESCRIPTION	P/N
	Hydraulic Pump Assy [Includes: 1; 2; 4; 8; 11; 2 of 3, 6 & 9; 4 of 10]	1801626
1	Hydraulic Pump - 12V M310	1800090
2	Pump Mtg Bracket	1801623
3	Pump Spacer	1801223
4	Clamp - 5" to 7"	1800906
5	Rubber Motor Mount	1801125
6	Hydraulic Hose - 84" OAL	1801627
7	Solenoid Cover - DL	1801015
8	Circuit Breaker - 150 Amp	*1800458
9	Hydraulic Fitting - 4JIC x 1/4NPT x MI90	*1800112
10	Ring Terminal - 4 Ga. x 3/8" Stud - Battery	*1800158
11	Dual-Conductor Wire - 4 Ga. - 16'	*1800220

*These items are NOT shown in the drawing.

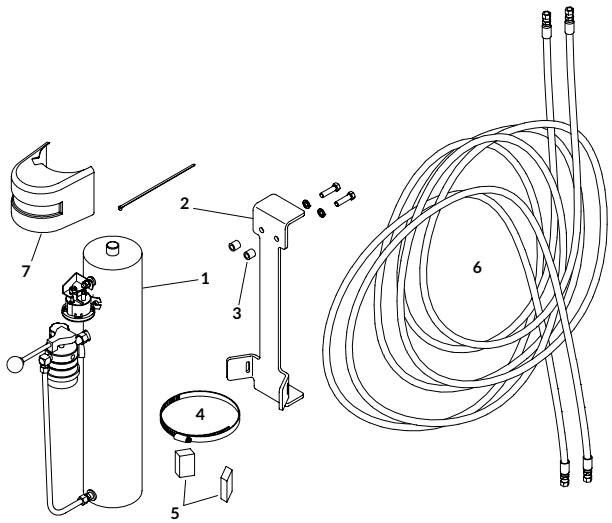

QUICK-FLIP™ III Discontinued in 2023.

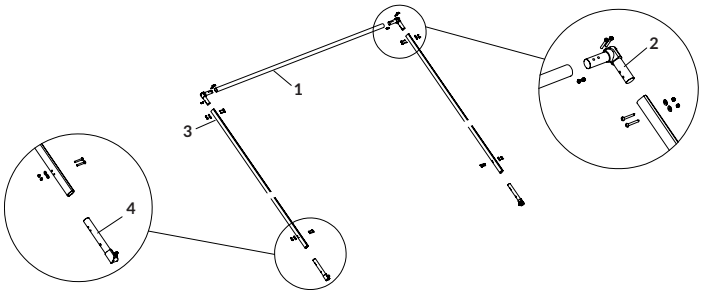

PIVOT ARMS - SINGLE AXLE AND TRAILER

	DESCRIPTION	P/N
1	Rear Cross Piece	1800300
2	Cast Elbow - 90°	1800597
3	Alum Return Arm - 150"	1800421
	Alum Return Arm - 240"	1801241
4	Spring Pivot Connector	1801636

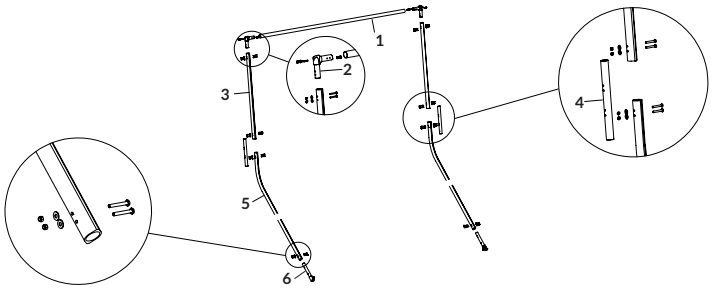

PIVOT ARMS - TANDEM | MULTI-AXLE

	DESCRIPTION	P/N
	Arm & Spring Kit - Multi Axle	1808751
1	Rear Cross Piece	1800300
2	Cast Elbow - 90°	1800597
3	Alum Upper Return Arm - 50"	1800548
4	Arm Coupler	1800547
5	Alum Lower Return Arm	1800545
6	Spring Pivot Connector	1801636

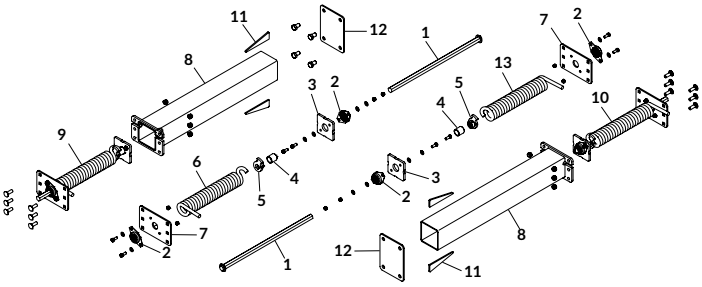

SPRING PIVOTS - SINGLE AXLE AND TRAILER

	DESCRIPTION	P/N
1	Spring Shaft - 23-1/4" x 7/8" Hex	1808636
2	Hex Bearing - 7/8" ID	1801243
3	Inner Bearing Plate	1808639
4	Bearing Spacer	1808638
5	Spring Catch - 7/8" Hex	1808637
6	Torsion Spring 22-Coil - L	1800279
7	Outer Bearing Plate	1808640
8	Spring Pivot Tube	1808641
9	Internal Spring Assy - L	1808635
10	Internal Spring Assy - R	1808634
11	Frame Mount Gusset	1808646
12	Frame Mount Plate - 4-1/2" SQ	1808645
13	Torsion Spring 22-Coil - R	1800280

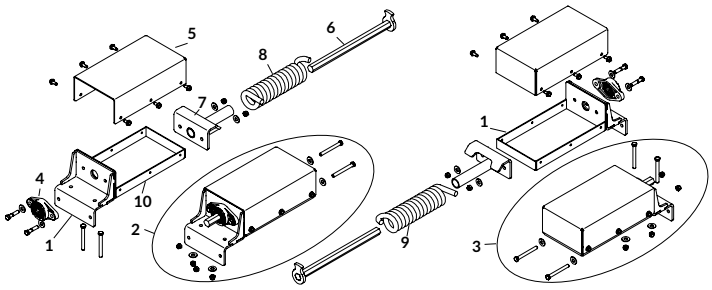

SPRING PIVOTS - TANDEM | MULTI-AXLE

	DESCRIPTION	P/N
1	Spring Pivot Mount	1808663
2	Bridge Mount Spring Assy - L [Includes: 2; 5; 6; 7; 8; 10]	1808665
3	Bridge Mount Spring Assy - R [Includes: 2; 5; 6; 7; 9; 10]	1808664
4	Hex Flange Bore Unit	1801082
5	Spring Housing Cover	1808683
6	Spring Shaft - 14-1/4" x 7/8" Hex	1808671
7	Spring Retainer Weldment	1118955
8	Torsion Spring 15-Coil - L	1704476
9	Torsion Spring 15-Coil - R	1704477
10	Spring Housing Base	1808669

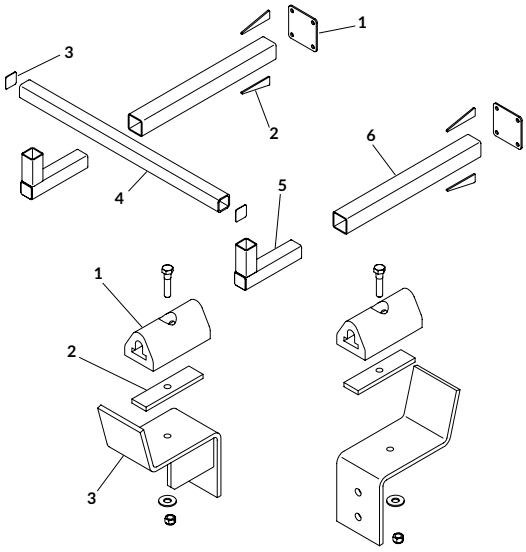

SPRING PIVOT SUPPORTS

	DESCRIPTION	P/N
	Spring Pivot Support Kit - Tandem [Includes: 2 of 4; 4 of 1, 3, 5 & 6; 8 of 2]	1808752
1	Frame Mount Plate - 3" SQ	1808673
2	Frame Mount Gusset	1808646
3	End Cap - 2-1/2" SQ	1808678
4	Spring Pivot Mount Tube	1808679
5	Spring Pivot Support Elbow	1808793
6	Spring Pivot Support Tube	1808672

PIVOT ARM RESTS

	DESCRIPTION	P/N
	Rubber Bumper Kit [Includes: 2 of 1, 2 & 3]	1808659
1	Rubber Bumper - Drilled - 4"	1801012
2	Bumper Hold-Down Bar	1800140
3	Pivot Arm Rest	1801324

QUICK-FLIP™ III Discontinued in 2023.

BOX DETAILS | ORDER FORMS

BOX DETAIL SHEET FOR END DUMPS

ALL TARPS ARE CUSTOM-MADE TO ORDER AND ARE NON-RETURNABLE. CORRECT PHYSICAL MEASUREMENTS ARE ESSENTIAL FOR PROPER TARP FIT. PROVIDE ALL REQUESTED INFORMATION OR YOUR ORDER MAY BE DELAYED. **DO NOT** USE UNIVERSAL BOX SIZES. **ALWAYS** USE ACTUAL MEASUREMENTS. BOX SIZE AND FINISHED TARP SIZE ARE **NOT** THE SAME.

CONTACT INFORMATION

G004BD-1019

NAME _____

ADDRESS _____

EMAIL _____

CITY _____ STATE _____ ZIP _____

PHONE _____ FAX _____

BOX/TRAILER MAKE _____

BOX DIMENSIONS

A _____ UPPER BOX LENGTH

B _____ UPPER BOX WIDTH

Front_____Center_____Rear_____

N _____ TOP RAIL WIDTH

U _____ INSIDE BOX WIDTH

X _____ BOX HEIGHT

CORNER CONFIGURATION *Must select one — see Figure 1*

SQUARE DIAGONAL RADIUS/NO RECESS

SQUARE RECESS DIAGONAL RECESS

C _____ OUTSIDE CORNER RADIUS *Needed for ALL radius fronts*

D _____ RECESSED WIDTH **E** _____ FLAT ACROSS FRONT

F _____ FRONT-CORNER POST **G** _____ GUSSET LENGTH

V _____ FLAT ACROSS DIAG. **W** _____ DIAGONAL DEPTH

TARP RAIL STYLE *See Figure 2*

SQUARE SELF CLEANING SQUARE W/PLANKS*

*Are planks flush with outside of top rail? Y / N *(Circle one)*

TARP RAIL DROP *See Figure 3* FRONT REAR

L _____ BULKHEAD DEPTH **O1** _____ FRONT TOP RAIL DROP

M _____ THRESHOLD DEPTH **O2** _____ REAR TOP RAIL DROP

FRONT END STYLE *See Figure 4*

RAISED FRONT SHIELD RAISED SHIELD/FLAT TOP RAIL

SLANT W/CURVED RAISED FRONT SLANT W/SQUARE RAISED FRONT

SQUARE TUB W/INVERTED RAM

AD _____ CYLINDER HEIGHT **J** _____ UPPER SHIELD WIDTH

AE _____ DOGHOUSE DEPTH **J1** _____ DOGHOUSE WIDTH

H _____ SHIELD HEIGHT **K** _____ LOWER SHIELD WIDTH

REAR DUMP STYLE *See Figure 5*

OVERSLUNG HINGE GATE COMBO DOOR HINGE GATE

HIGH POWER LIFT GATE RAISED HINGE GATE

AF _____ HINGE DEPTH **AK** _____ HINGE HEIGHT

B _____ BOX WIDTH/REAR

TARP WEIGHT

18 OZ. 22 OZ. MESH

TARP COLOR(S) _____

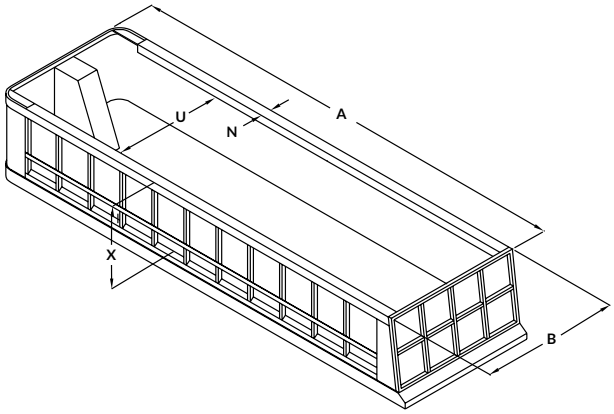

FIGURE 1

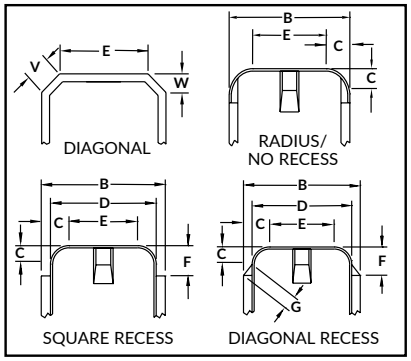

FIGURE 2

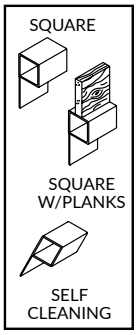

FIGURE 3

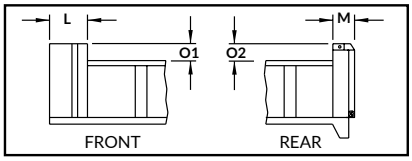

FIGURE 4

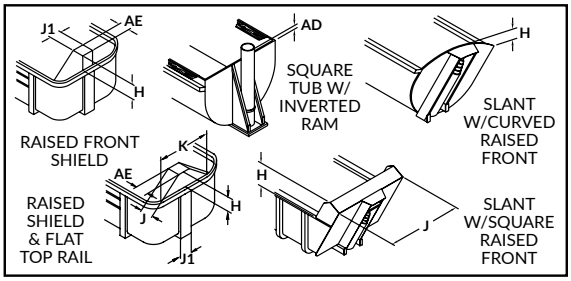

FIGURE 5

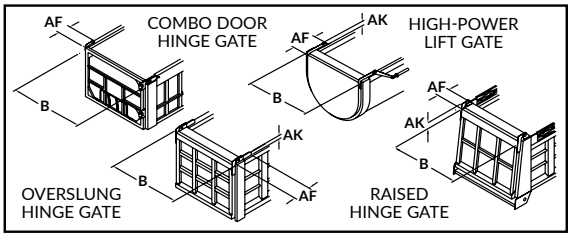

Fax 605.665.0501 **Salesperson**

BOX DETAIL SHEET FOR LIVE-BOTTOM TRAILERS

CORRECT PHYSICAL MEASUREMENTS ARE ESSENTIAL FOR PROPER TARP FIT. PROVIDE ALL REQUESTED INFORMATION OR YOUR ORDER MAY BE DELAYED. **DO NOT** USE UNIVERSAL BOX SIZES. **ALWAYS** USE ACTUAL MEASUREMENTS. BOX SIZE AND FINISHED TARP SIZE ARE **NOT** THE SAME.

FIGURE 1

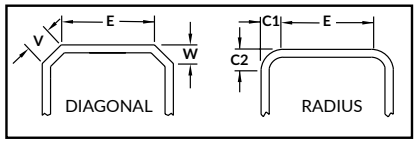

FIGURE 2

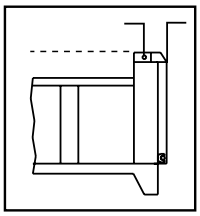

To measure radius corners correctly, place a carpenter's square on the front radius of the trailer. Measure at the point where the radius starts to arch around the front of the trailer.

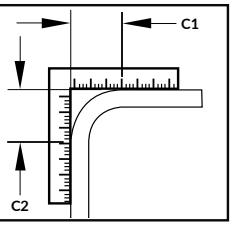

FIGURE 3

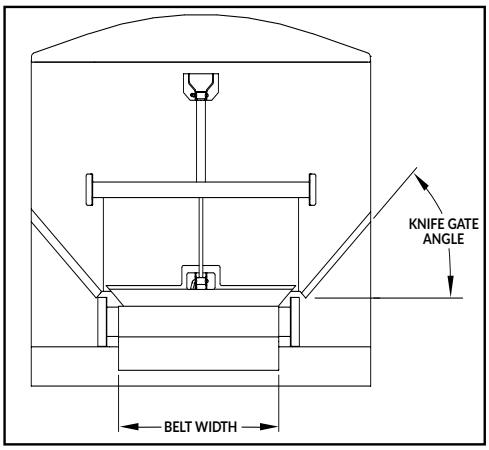

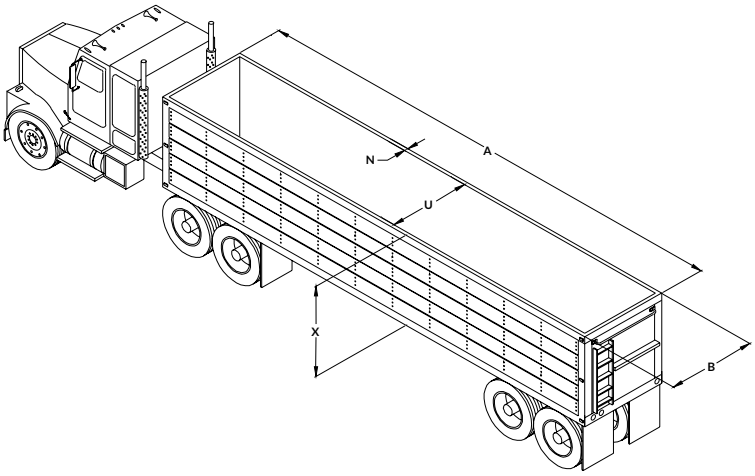

CONTACT INFORMATION

G016BD-1119

NAME _____

ADDRESS _____

EMAIL _____

CITY _____ STATE _____ ZIP _____

PHONE _____ FAX _____

BOX/TRAILER MAKE _____

BOX/TRAILER MODEL _____

BOX DIMENSIONS

A _____ UPPER BOX LENGTH

B _____ UPPER BOX WIDTH

Front _____ Center _____ Rear _____

N _____ TOP RAIL WIDTH

U _____ INSIDE BOX WIDTH

X _____ BOX HEIGHT

CORNER CONFIGURATION *See Figure 1*

SQUARE DIAGONAL RADIUS

C _____ OUTSIDE CORNER RADIUS | *For all radius fronts*

C1 _____ FRONT RADIUS

C2 _____ SIDE RADIUS

E _____ FLAT ACROSS FRONT

V _____ FLAT ACROSS DIAGONAL

W _____ DIAGONAL DEPTH

REAR DOOR STYLE TOP HINGE SIDE HINGE

REAR HINGE DEPTH *See Figure 2* 0" TO 10" 11" TO 17"

MANUAL OVERRIDE KIT" YES NO

*Recommended if hinge depth is > 2".

BACK CAP CHOICE** ALUMINUM FABRIC CAP

**MUST be 20-1/4" deep.

KNIFE GATE *See Figure 3* YES NO

KNIFE GATE ANGLE 45° 57°

BELT WIDTH 36" 42" 48" 60"

TARP WEIGHT 18 OZ. 22 OZ.

TARP COLOR(S) _____

Fax 605.665.0501 **Salesperson**

BOX DETAIL SHEET FOR BELLY DUMPS AND OPEN-TOP VANS

ALL TARPS ARE CUSTOM-MADE TO ORDER AND ARE NON-RETURNABLE. CORRECT PHYSICAL MEASUREMENTS ARE ESSENTIAL FOR PROPER TARP FIT. PROVIDE ALL REQUESTED INFORMATION OR YOUR ORDER MAY BE DELAYED. **DO NOT** USE UNIVERSAL BOX SIZES. **ALWAYS** USE ACTUAL MEASUREMENTS. BOX SIZE AND FINISHED TARP SIZE ARE **NOT** THE SAME.

CONTACT INFORMATION

G009BD-0519

NAME _____

ADDRESS _____

EMAIL _____

CITY _____ STATE _____ ZIP_____

PHONE _____ FAX_____

BOX/TRAILER MAKE _____

BOX DIMENSIONS FOR BELLY DUMPS

A _____ UPPER BOX LENGTH

B _____ UPPER BOX WIDTH

Front_____Center_____Rear_____

N _____ TOP RAIL WIDTH

U _____ INSIDE BOX WIDTH

U1 _____ INSIDE PLANK-TO-PLANK WIDTH

X _____ BOX HEIGHT

NOTE: If belly dump is rounded, Shur-Lok® will NOT fit. Same goes for a box tapered at bottom for brackets for arms. In either case, MUST switch to Shur-Matic™ system instead. For questions, call 800.474.8756.

TARP RAIL STYLE *See Figure 1*

SQUARE SELF CLEANING SQUARE W/PLANKS*

*Are planks flush with outside of top rail? Y / N *(Circle one)*

LANDING EXTENSION LENGTH *See Figure 2 – for Shur-Trak™ only*

AJ _____

TARP COLOR(S) _____

BOX DIMENSIONS FOR OPEN-TOP VANS

A _____ UPPER BOX LENGTH

B _____ UPPER BOX WIDTH

Front_____Center_____Rear_____

N _____ TOP RAIL WIDTH

U _____ INSIDE BOX WIDTH

X _____ BOX HEIGHT

CORNER CONFIGURATION *See Figure 3*

SQUARE DIAGONAL RADIUS

C _____ OUTSIDE CORNER RADIUS *For all radius fronts*

E _____ FLAT ACROSS FRONT

V _____ FLAT ACROSS DIAGONAL

W _____ DIAGONAL DEPTH

TARP WEIGHT

18 OZ. 22 OZ. MESH

TARP COLOR(S) _____

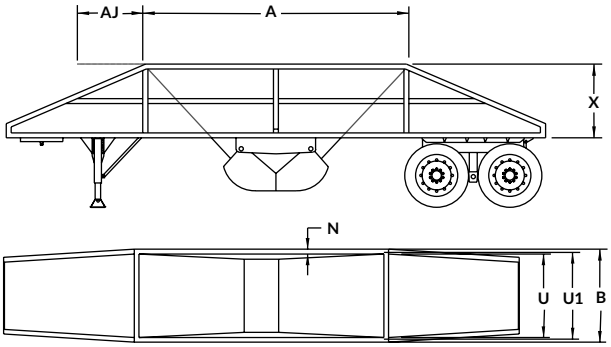

FIGURE 1

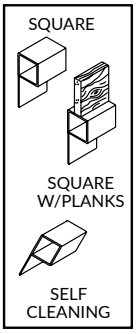

FIGURE 2

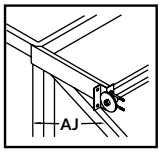

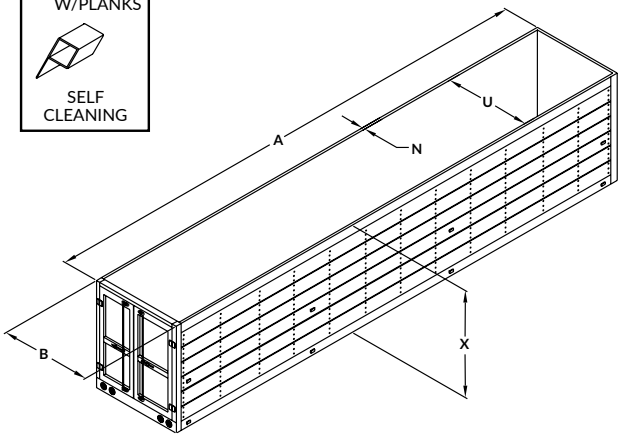

FIGURE 3

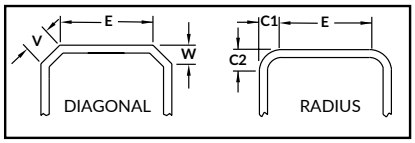

To measure radius corners correctly, place a carpenter's square on the front radius of the trailer. Measure at the point where the radius starts to arch around the front of the trailer.

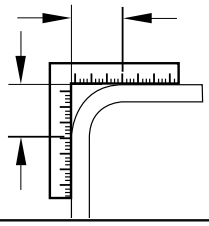

Fax 605.665.0501 **Salesperson**

SMARTrailer™ Accessories for End Dumps & Live Bottoms

G005OF-0224

ORDER FORM

Correct measurements are crucial to getting the right tarp fit. Provide all requested information or your order may be delayed. **DO NOT** use universal box sizes. **ALWAYS** use actual measurements.

CUSTOMER ID# _____ PO# _____ DATE _____ SOURCE CODE _____

NAME _____

ADDRESS _____ EMAIL _____ PHONE _____

CITY _____ STATE _____ ZIP _____

☐ END USER ORDER

☐ DEALER ORDER

SHIP TO _____

4500 HD FOR END DUMP

EQUIPPED WITH GATE FLEX™ OPTION TO ACCOMMODATE END DUMP DOORS.

MAKE _____

YEAR _____

FRONT OF TRAILER

☐ VERTICAL ☐ SLOPED

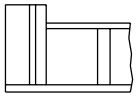

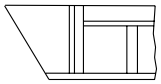

REAR OF TRAILER

☐ TOP HINGE

(Must be level with or below the top rail.)

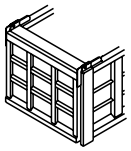

REAR HINGE DEPTH

☐ 0" - 10"

☐ >11" - 17"

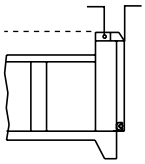

MANUAL OVERRIDE*

☐ YES ☐ NO

*Recommended for hinge depth greater than 2".

QTY OF ELECTRIC WIRE

☐ 75' ☐ 100'

OPERATION TYPE

☐ ROCKER SWITCH

☐ SHURLINK PRO™ REMOTE

☐ SHURLINK EZR™ REMOTE

ADDITIONAL ITEMS TO ASK ABOUT

Are existing roll tubes in good shape? Need easy-off 6" offset tarp stops? Replacement U-clamps and screws?

Will fit these trailer styles:

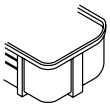

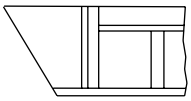

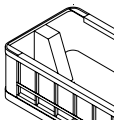

These styles need modification in order to operate properly.

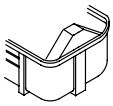

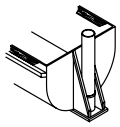

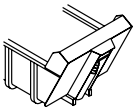

4500 HD FOR LIVE BOTTOM

MAKE _____

YEAR _____

FRONT OF TRAILER

☐ VERTICAL ☐ SLOPED

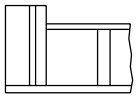

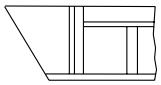

REAR OF TRAILER _____

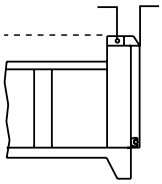

MANUAL OVERRIDE*

☐ YES ☐ NO

*Recommended for hinge depth greater than 2".

RIB SPACING

FRONT _____ REAR _____**

**Measure from center of rib to center of rib.

CATWALK LENGTH _____

LOCATION OF LADDER

☐ U.S. DRIVER ☐ U.S. PASSENGER

☐ CENTER ☐ OFF-CENTER

TRAILER MODEL

☐ 2006 OR NEWER

☐ 2005 OR OLDER

BACK CAP CHOICE***

☐ ALUMINUM ☐ FABRIC CAP

*Recommended for hinge depth greater than 2".

OPERATION TYPE

☐ ROCKER SWITCH

☐ SHURLINK PRO™ REMOTE

☐ SHURLINK EZR™ REMOTE

ADDITIONAL ITEMS TO ASK ABOUT

Are existing roll tubes in good shape? Need easy-off 6" offset tarp stops****? Replacement U-clamps and screws?

****Required for Top Hing Rear Door Kits.

KNIFE GATE

☐ YES ☐ NO

ANGLE

☐ 45° ☐ 57°

KNIFE GATE

☐ 36" ☐ 42" ☐ 48" ☐ 60"

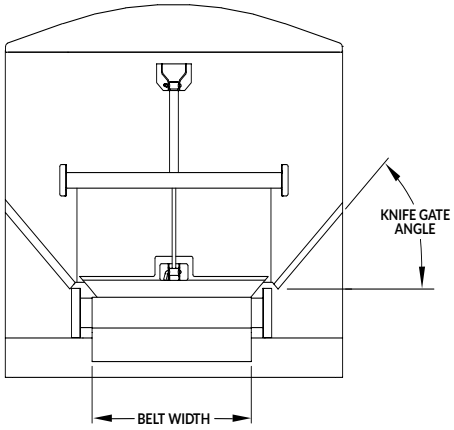

SHUR-CO® SALES REP _____ DATE _____

Phone 800.474.8756 • Fax 605.665.0501
www.SHURCO.com

WARRANTIES

TERMS AND CONDITIONS

PATENTS

SHURCO™ SALES TEAM

Products and pricing are subject to change without notice. Components other than standard may require a non-refundable engineering fee.
Marks are owned by Shur-Co, LLC or their respective owners. © 2026 Shur-Co, LLC. All rights reserved.

SHURCO.COM | 800-474-8756

Marks are owned by Shur-Co, LLC or their respective owners. © 2025 Shur-Co, LLC. All rights reserved.
SC010CAT_1225