SHURCO™

CONSTRUCTION PRODUCT CATALOG

2026

TABLE OF CONTENTS

CONSTRUCTION SYSTEMS

FLIP-ARM

Arm-Matic™ 6
Flash™ 7
Bullet™ 10
Hammer™ II 12
5000X 14
Arm System Replacement Tarps 16

PULL-TARP

UT Tarp System™ 18
DuraPull™ 20
2000SR 22
Pull-Tarp System Replacement Tarps 23

FRONT-TO-BACK CABLE

Shur-Trak™ II 24
Replacement Tarps 27

SIDE-TO-SIDE

Shur-Lok® 30
Replacement Tarps 36
Turning Point™ Bow | Electric Turning Point™ Bow 40
4500 Series HD 42
APEX™ 46
Belt 'N Ratchet 48
Replacement Tarps 54
Cable-Lok™ | Electric Cable-Lok™ 56
Replacement Tarps 57
IronSide2™ 60

TARPS & ACCESSORIES

ShurLink™ 63
LiteALL™ 64
Service Truck Power Kits 66
Control Modules 68
Arm-Lock™ 69
Tension Arm™ 69
Spring Trap™ II 69
Motors 70
Tarp Repair Supplies 72
Fabric Materials 73

Competitor Cross Reference Charts 74

REPLACEMENT PARTS

Replacement Parts 81
Discontinued Replacement Parts 155

BOX DETAILS

End Dumps 166
Dump Bodies 167
Belly Dumps & Open-Top Vans 168
Side Dumps 169
Cable-Lok | Belly Dumps 170
Live-Bottoms 171

ORDER FORMS

Shur-Trak™ II 172
Shur-Trak™ II Short Stop™ and Cover-Pro® 173
SMARTrailer™ | Grain Trailers 174
SMARTrailer™ | End Dumps & Live-Bottoms 175

APPLICATION COMPARISON

	BELLY DUMPS	DUMP BODIES	END DUMPS	SIDE DUMPS	LANDSCAPE BOXES	OPEN-TOP VANS	WOODCHIP TRAILERS	
FLIP-ARM								
Arm-Matic	✓	✓	✓					Up to 37' | Up to 102"
Flash	✓	✓	✓					Up to 41' | Up to 102"
Bullet	✓	✓	✓		✓			Up to 23' | Up to 102"
Hammer II	✓	✓	✓		✓			Up to 23' | Up to 102"
5000X	✓	✓	✓		✓			Up to 16' | Up to 102"
PULL-TARP								
UT Tarp System					✓			Up to 23' | Up to 102"
DuraPull	✓	✓	✓		✓			Up to 23' | Up to 102"
2000SR	✓	✓	✓		✓			Up to 23' | Up to 102"
FRONT-TO-BACK CABLE								
Shur-Trak II	✓	✓	✓					Up to 44' | Up to 102"
Shur-Trak II Short Stop™	✓	✓	✓					Up to 44' | Up to 102"
SIDE-TO-SIDE								
Shur-Lok	✓	✓	✓			✓	✓	Up to 54' | Up to 102"
Turning Point Bow		✓	✓					Up to 48' | Up to 102"
Electric Turning Point Bow			✓					Up to 48' | Up to 102"
4500 Series HD			✓			✓	✓	Up to 54' | Up to 102"
APEX™			✓			✓	✓	44' to 53' | Up to 102"
Belt 'N Ratchet	✓	✓	✓			✓	✓	Up to 54' | Up to 102"
Cable-Lok	✓							Up to 24' | Up to 102"
Electric Cable-Lok	✓							Up to 24' | Up to 102"
IronSide2				✓				Up to 38' | Up to 102"

WHAT ARE YOU HAULING?

	ROCK	SAND	FRAC SAND	GRAVEL	REFUSE	ASPHALT	FLY ASH	CHIPS	SAWDUST
FLIP-ARM									
Arm-Matic	✓	✓		✓	✓	✓			
Flash	✓	✓		✓	✓	✓			
Bullet	✓	✓		✓	✓	✓			
Hammer II	✓	✓		✓	✓	✓			
5000X	✓	✓		✓	✓	✓			
PULL-TARP									
UT Tarps & Landscape Boxes	✓	✓		✓	✓				
DuraPull	✓	✓		✓	✓				
2000SR	✓	✓		✓	✓				
FRONT-TO-BACK CABLE									
Shur-Trak II	✓	✓		✓		✓			
Shur-Trak II Short Stop	✓	✓		✓		✓			
SIDE-TO-SIDE									
Shur-Lok	✓	✓	✓	✓	✓	✓	✓	✓	✓
Turning Point Bow	✓	✓		✓					
Electric Turning Point Bow	✓	✓		✓					
4500 Series HD	✓	✓	✓	✓	✓		✓	✓	✓
APEX					✓			✓	✓
Belt 'N Ratchet	✓	✓	✓	✓	✓	✓	✓	✓	✓
Cable-Lok	✓	✓		✓		✓			
Electric Cable-Lok	✓	✓	✓	✓		✓			
IronSide2	✓	✓	✓	✓			✓		

CONFIGURING YOUR SYSTEMS

Shurco systems can be ordered using two different methods, by a part number, which allows the customer to order standard features only. The other, is by configuring the options desired. For that type of kit order you will find your price for the standard features listed, then select your desired options.

In this example the alphabetical letter **B** designates the feature, the bullet • designates the standard feature in the kit, the numerical value **2** shows a different available option for that feature. This will allow the customer to communicate their desired feature, by requesting feature B2 [Easy-Off Tarp Stops]. The price can then be found by taking "Deduct/Ea." $ Amount and multiplying that by the number of tarp stops found in the **HARDWARE QTY** chart for your size kit, then deducting that $ amount from the standard price.

EXAMPLE

COMPLETE KIT

PRICE
38'
40'
42'
44'
46'
48'
50'
52'
54'

↑ Standard Price

STANDARD FEATURES AND OPTIONS

A	LATCHPLATES	
•	Aluminum Latchplate	Standard
B	TARP STOPS	
•	Easy-Off Belt Flex™ Tarp Stop	Standard
1	Flexible Easy-Off Tarp Stop	N/C
2	**Easy-Off Tarp Stop**	**Deduct/Ea.**
3	6" Offset Belt Flex™ Tarp Stop	Add/Ea.
4	6" Offset Flexible Easy-Off Tarp Stop	Add/Ea.
5	6" Offset Easy-Off Tarp Stop	Add/Ea.
B	END CAPS	
•	Aluminum (Flat) End Caps	Standard
1	Poorboy Rear Tapered Flap	N/C
2	No Rear Cap (Flat)	Deduct
3	Aluminum Universal (Flat) Front Cap	Add
4	Poorboy Front Tapered Flap	N/C

HARDWARE QTY

SIZE	TARP STOPS
35' to 38'	6
39' to 43'	6
44' to 46'	7
47' to 50'	7
51' to 54'	8

CONSTRUCTION SYSTEMS

ARM-MATIC

ALUMINUM ARM SYSTEM

WORRY-FREE OPERATION

Whether you are hauling gravel, coal, scrap metal or rock, you need a tarp system that is as dependable as the rest of your equipment.

REMOTE OPTIONS AVAILABLE

A cab-installed rocker switch allows you to open/close the system from your truck cab. Our optional 30-channel ShurLink PRO™ or 5-channel ShurLink EZR™ wireless remote controls are available. Control multiple Shurco wireless products with a single remote at ranges up to 150'.

KEY FEATURES

- Aluminum Tarp Spool with Side Plates
- Galvanized Steel Crossover Bar - 2 PC.
- Aluminum High-Gloss Pivot Arms
- Durabuilt™ Motor with 3-Year Warranty
- Rocker Switch

The Arm-Matic™ was designed with reliable and durable operation in mind for end dump applications.

- 4-Spring Side Mount - Up to 18'
- 5-Spring Side Mount - Up to 24'
- Torsion Spring Hex Shaft - Up to 28'
- Torsion Spring with Hex/Round Shaft - Up to 37'
- Standard and Frameless Options Available

REPLACEMENT ARM (HOOP) KITS

1-PC ALUM. ARM REPLACEMENT KITS	
Arm-Matic™ Arm/4-Spring Kit - 10' Arms w/2' Bend	1125316
Arm-Matic™ Arm/4-Spring Kit - 12' Arms w/2' Bend	1125317
Arm-Matic™ Arm/UB Spring Kit - 12' Arms w/2' Bend	1125318

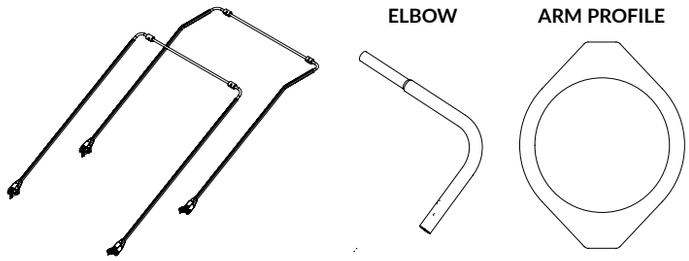

NOTE: Directly replaces most Mountain Tarp aluminum arms.

Table of Contents

Replacement Parts

MORE PRODUCT INFORMATION

Want to learn more? Simply scan to explore further details about Arm-Matic™ features.

FLASH

ALUMINUM ARM SYSTEM

KEY FEATURES

- Extruded Aluminum Roller Bar with Side Plates
- Aluminum High-Gloss Pivot Arms
- Durabuilt™ Motor with 3-Year Warranty
- Rotary Switch
- Assembled Housings - Standard for 38' and 41' Kits
- High-Mount Compatible - Up to 23' Only

The spring assembly features five per side to ensure loads are secure. An exclusive extra-strong stamped-steel spring enclosure, dubbed “the clamshell” for its impressive closing capabilities, protects the springs from rocks, mud and debris. A two-part stamping process eliminates welds and contributes to a more indestructible product. The heavy-duty grade 8-spring pin will not break. Models marked “UB” are designed with 22-coil under-body spring assemblies.

Pivot arms are thick-walled. Optional 30° arms are bent with a specially-made die in a one-piece design, optimum for structural integrity. Die-cast 90° aluminum elbows at rear cross piece match arm shape and enhance arm strength. An upper bolt slot simplifies arm installation.

REPLACEMENT ARM (HOOP) KITS

1-PC ALUM. ARM REPLACEMENT KITS	
Flash™ Arm/5-Spring Kit w/Straight Arms	1801075
Flash™ Arm/5-Spring Kit w/3' Bend	1801076

ELBOW

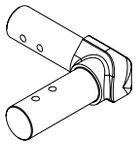

ARM PROFILES

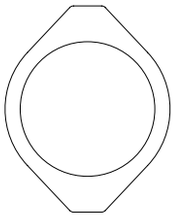

NOTE: Directly replaces most Mountain Tarp aluminum arms.

Table of Contents

Replacement Parts

MORE PRODUCT INFORMATION

Want to learn more? Simply scan to explore further details about Flash™ features.

FITS DUMP BODIES & BELLY DUMPS - UP TO 18' | *Tarps Sold Separately*

KIT NAME	WIDTH	ARMS	DRIVE	SPRINGS	WIRE	MODE OF OPERATION	P/N
Arm-Matic™	Up to 102"	2' x 30° Bend - 12'	Electric	4-Flat Coil Spring	50'	Rocker Switch	1125819
Arm-Matic™	Up to 102"	2' x 30° Bend - 12'	Electric	4-Flat Coil Spring	50'	Rocker Switch	*1125821

*Includes Aluminum Windshield.

FITS DUMP BODIES - UP TO 24' | *Tarps Sold Separately*

KIT NAME	WIDTH	ARMS	DRIVE	SPRINGS	WIRE	MODE OF OPERATION	P/N
Arm-Matic™	Up to 102"	2' x 30° Bend - 14'	Electric	5-Flat Coil Spring	75'	Rocker Switch	1125820

FITS END DUMPS - UP TO 29' | *Tarps Sold Separately*

KIT NAME	WIDTH	ARMS	DRIVE	SPRINGS	WIRE	MODE OF OPERATION	P/N
Arm-Matic™ Under body	96"	2' x 30° Bend - 14'	Electric	14-Coil UB Torsion Hex Shaft	75'	Rocker Switch	1125827
Arm-Matic™ Under body	102"	2' x 30° Bend - 14'	Electric	14-Coil UB Torsion Hex Shaft	75'	Rocker Switch	1125828

FITS END DUMPS - UP TO 37' | *Tarps Sold Separately*

KIT NAME	WIDTH	ARMS	DRIVE	SPRINGS	WIRE	MODE OF OPERATION	P/N
Arm-Matic™ Under body	96"	Straight - 20'	Electric	14-Coil UB Torsion Hex/Round Shaft	100'	Rocker Switch	1125831
Arm-Matic™ Under body	102"	Straight - 20'	Electric	14-Coil UB Torsion Hex/Round Shaft	100'	Rocker Switch	1125832

FITS BOXES & TRAILERS - UP TO 23' | *Tarps Sold Separately*

KIT NAME	WIDTH	ARMS	DRIVE	SPRINGS	WIRE	MODE OF OPERATION	P/N
Flash™	Up to 102"	Straight - 12'-6"	Electric	5-Flat Coil Spring	60'	Rotary Switch	1801927
Flash™ 30°	Up to 102"	3' x 30° Bend	Electric	5-Flat Coil Spring	60'	Rotary Switch	1801945
Flash™ Under body	Up to 102"	Straight - 12'-6"	Electric	22-Coil UB Torsion	60'	Rotary Switch	1800427
Flash™ Under body 30°	Up to 102"	3' x 30° Bend	Electric	22-Coil UB Torsion	60'	Rotary Switch	1800495
Flash™ - Rocker	Up to 102"	Straight - 12'-6"	Electric	5-Flat Coil Spring	60'	Rocker Switch	1810282
Flash™ - Rocker - 30°	Up to 102"	3' x 30° Bend	Electric	5-Flat Coil Spring	60'	Rocker Switch	1810283
Flash™ Under body - Rocker	Up to 102"	Straight - 12'-6"	Electric	22-Coil UB Torsion	60'	Rocker Switch	1810284
Flash™ Under body - Rocker - 30°	Up to 102"	3' x 30° Bend	Electric	22-Coil UB Torsion	60'	Rocker Switch	1810285

FITS BOXES & TRAILERS - UP TO 38' | *Tarps Sold Separately*

KIT NAME	WIDTH	ARMS	DRIVE	SPRINGS	WIRE	MODE OF OPERATION	P/N
Flash™ 38 Under body	96"	Straight - 20'	Electric	22-Coil UB Torsion	25' w/Contact Plate	Rotary Switch	1800318
Flash™ 38 Under body	102"	3' x 30° Bend	Electric	22-Coil UB Torsion	25' w/Contact Plate	Rotary Switch	1803942
Flash™ 38 Under body - Rocker	96"	Straight - 20'	Electric	22-Coil UB Torsion	25' w/Contact Plate	Rocker Switch	1810286
Flash™ 38 Under body - Rocker	102"	3' x 30° Bend	Electric	22-Coil UB Torsion	25' w/Contact Plate	Rocker Switch	1810287

NOTE: Previously known as Long Arm.

FITS TRAILERS - 38'–41' | *Tarps Sold Separately*

KIT NAME	WIDTH	ARMS	DRIVE	SPRINGS	WIRE	MODE OF OPERATION	P/N
Flash™ 41 Under body	96"	Straight - 21'-6-1/2"	Electric	14-Coil UB Torsion	25' w/Contact Plate	Rotary Switch	1801534
Flash™ 41 Under body	102"	Straight - 21'-6-1/2"	Electric	14-Coil UB Torsion	25' w/Contact Plate	Rotary Switch	1808911
Flash™ 41 Under body - Rocker	96"	Straight - 21'-6-1/2"	Electric	14-Coil UB Torsion	25' w/Contact Plate	Rocker Switch	1810288
Flash™ 41 Under body - Rocker	102"	Straight - 21'-6-1/2"	Electric	14-Coil UB Torsion	25' w/Contact Plate	Rocker Switch	1810289

NOTE: Previously known as Long Arm 41.

ACCESSORIES

KIT NAME	P/N
Arm-Matic™ Tension Arm Kit - 10' Arms w/2' Bend	1120129
Arm-Matic™ Tension Arm Kit - 12' Arms w/2' Bend	1120130
Arm-Matic™ Tension Arm Kit - 14' Arms w/2' Bend	1120131
Flash™ Tension Arm Kit w/Straight Arms	1808506
Flash™ Tension Arm Kit w/3' Bend	1808507
Alum Arm Rest Kit	1801999
Arm-Matic™ Alum Windshield Deflector - 1 PC	1127025
Flash™| Bullet™ Alum Windshield Deflector - 1 PC	1801919
Arm-Lok™ Kit - For Trucks	1125250
Arm-Lok™ Kit - For Trailers	1125800
Spring Trap II Hold-Down Kit	1128260
Arm Hold-Down Kit	1120389
Tarp Roller Guide	1119750
Dual Pole Conductor Plug Kit	1801377

REPLACEMENT ARM (HOOP) KITS

KIT NAME	P/N
Arm-Matic™ Arm/4-Spring Kit - 10' Arms w/2' Bend	1125316
Arm-Matic™ Arm/4-Spring Kit - 12' Arms w/2' Bend	1125317
Arm-Matic™ Arm/UB Spring Kit - 12' Arms w/2' Bend	1125318
Flash™ Arm/5-Spring Kit w/Straight Arms	1801075
Flash™ Arm/5-Spring Kit w/3' Bend	1801076

ELECTRIC OPERATION

DURABUILT™ SOLENOID KIT
P/N 1809047 - 12V KIT (8 GAUGE)
P/N 1809927 - 12V KIT (6 & 8 GAUGE)

MOTOR REVERSING SOLENOID
P/N 1703845

SOLENOID COVER
P/N 1703896

ROCKER SWITCH
P/N 1116020 - ARM-MATIC™

ROCKER SWITCH
P/N 1800602 - FLASH™

ROTARY SWITCH
P/N 1110551

LOCK/HOLD-DOWNS

ROTARY SWITCH KIT
P/N 1802076

ARM-LOCK™ KIT (PNEUMATIC)
P/N 1125250 - FOR TRUCKS
P/N 1125800 - FOR TRAILERS

ARM-MATIC™ TENSION ARM KIT
P/N 1120129 - 10' ARMS W/2' BEND
P/N 1120130 - 12' ARMS W/2' BEND
P/N 1120131 - 14' ARMS W/2' BEND

FLASH™ TENSION ARM KIT
P/N 1808506 - 12'-6" STRAIGHT ARMS
P/N 1808507 - 13'-9" ARMS W/3' BEND

MANUAL OPERATION

CHAIN DRIVE CRANK ASSEMBLY
P/N 1120349 - ARM-MATIC™

MOTORS

DIRECT-DRIVE MOTOR 900 WATT - 12V
P/N 1704878

DIRECT-DRIVE MOTOR 600 WATT - 12V
P/N 1802061 - FLASH™

SPRINGS

14-COIL TORSION SPRING - FLASH™
P/N 1801442 - LEFT SIDE
P/N 1801438 - RIGHT SIDE

15-COIL TORSION SPRING - ARM-MATIC™
P/N 1704476 - LEFT SIDE
P/N 1704477 - RIGHT SIDE

22-COIL TORSION SPRING - FLASH™
P/N 1800279 - LEFT SIDE
P/N 1800280 - RIGHT SIDE

FLAT COIL SPRING
P/N 1111027 - ARM-MATIC™
P/N 1800763 - FLASH™

TARP ROLLERS

ALUMINUM ROLLER BAR
P/N 1800737
FLASH™ ROLLER BAR 98" W/HDW
P/N 1114961
ARM-MATIC™ ROLLER BAR 103"

BULLET

ALUMINUM ARM SYSTEM

2-PIECE ADJUSTABLE ARMS

The 2-piece arms of the Bullet™ make installation easy. Adjusting the arm lengths during installation lends itself to a proper fit and better operation.

3-YEAR MOTOR WARRANTY

The dependable Durabuilt™ 12V direct-drive electric motor has an in-cab rotary switch for operator convenience. The motor comes with a 3-year full replacement warranty.

LOAD SECURITY

Four springs per side effectively contains light materials, preventing any escape, while accommodating bodies up to 23'.

KEY FEATURES

- Extruded Aluminum Roller Bar with Side Plates
- Aluminum High-Gloss Pivot Arms
- Durabuilt™ Motor with 3-Year Warranty
- Rotary Switch
- High-Mount Compatible - Up to 23' Only

The Bullet™ is designed to cover boxes up to 23' long. Available with either straight or 30° angled arms of anodized aluminum that will never rust! The tarp moves smoothly on an extruded aluminum roller bar, powered by the Durabuilt™ 12V direct-drive electric motor with a rotary switch or rocker switch upgrade. The motor is backed by a 3-year full replacement warranty.

REPLACEMENT ARM (HOOP) KITS

2-PC ALUM. ARM REPLACEMENT KITS	
Bullet™ Arm Kit - Straight Arms	1801595
Bullet™ Arm Kit - Arms w/30° Bend	1805259

ARM PROFILES

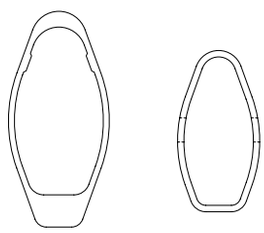

LOWER UPPER

Table of Contents

Replacement Parts

MORE PRODUCT INFORMATION

Want to learn more? Simply scan to explore further details about Bullet™ features.

FITS BOXES & TRAILERS - UP TO 23' | *Tarps Sold Separately*

KIT NAME	ARMS	DRIVE	SPRINGS	MODE OF OPERATION	P/N
Bullet™	Straight	Electric	Flat Coil - 4	Rotary Switch	1800987
Bullet™ 30°	30° Bend	Electric	Flat Coil - 4	Rotary Switch	1801974
Bullet™	Straight	Electric	Flat Coil - 4	Rocker Switch	1810280
Bullet™ 30°	30° Bend	Electric	Flat Coil - 4	Rocker Switch	1810281

ACCESSORIES

KIT NAME	P/N
Arm-Lok™ Kit - For Trucks	1125250
Arm-Lok™ Kit - For Trailers	1125800
Spring Trap™ II Hold-Down Kit	1128260
Flash™| Bullet™ Alum Windshield Deflector - 1 PC	1801919
Alum Arm Rest Kit	1801999

REPLACEMENT ARM (HOOP) KITS

KIT NAME	P/N
Arm-Matic™ Arm/4-Spring Kit - 10' Arms w/2' Bend	1125316
Arm-Matic™ Arm/4-Spring Kit - 12' Arms w/2' Bend	1125317

OPTIONS AND FEATURES

ELECTRIC OPERATION

DURABUILT™ SOLENOID KIT
P/N 1809047 - 12V KIT (8 GAUGE)
P/N 1809927 - 12V KIT (6 & 8 GAUGE)

MOTOR REVERSING SOLENOID
P/N 1703845

SOLENOID COVER
P/N 1703896

ROCKER SWITCH
P/N 1800602

ROTARY SWITCH
P/N 1110551

ROTARY SWITCH KIT
P/N 1802076

LOCK/HOLD DOWNS

ARM-LOCK™ KIT (PNEUMATIC)
P/N 1125250 - FOR TRUCKS
P/N 1125800 - FOR TRAILERS

MOTORS

DIRECT-DRIVE MOTOR 900 WATT - 12V
P/N 1704878

DIRECT-DRIVE MOTOR 600 WATT - 12V
P/N 1802061

SPRINGS

FLAT COIL SPRING
P/N 1800763

TARP ROLLERS

ALUMINUM ROLLER BAR
P/N 1800737
BULLET™ ROLLER BAR 98" W/HDW

HAMMER II

STEEL ARM SYSTEM

3-YEAR MOTOR WARRANTY

The dependable Durabuilt™ 12V direct-drive electric motor has an in-cab rotary switch for operator convenience.

QUICK INSTALL AND TARP EXCHANGE

With our roller bar design and a rear crosspiece that removes in minutes, both install times and tarp changes can be completed quickly.

OPTIONAL PIVOT RESET

This optional feature creates a steadier arm while in the locked position and helps keep the arm from bouncing during transportation.

KEY FEATURES

- Tarp Spool with Side Plates
- Extruded Aluminum Roller Bar
- 1.69" Round Arms - 2-PC (Black Powder Coat)
- High Mount Compatible
- HD Ground-Level Crank with Chain Guard
  - Standard On P/N 1809574 & 1809578
- Duarbuilt™ Motor
  - Standard On P/N 1810278 & 1810279
- Rotary Switch
  - Standard On P/N 1809555 & 1809556

Strong 1.69" OD round pivot arms and flat coil torsion springs provide smooth, powerful operation. The GL model has a ground level manual crank.

REPLACEMENT ARM (HOOP) KITS

2-PC ALUM. ARM REPLACEMENT KITS	
Hammer™ II Arm Kit - Straight Arms	1809557
Hammer™ II Arm Kit - Arms w/30° Bend	1809558

ARM PROFILES

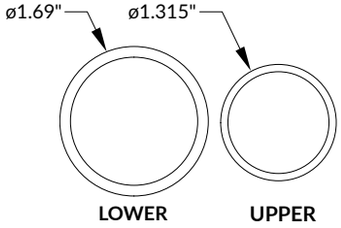

Table of Contents

Replacement Parts

MORE PRODUCT INFORMATION

Want to learn more? Simply scan to explore further details about Hammer™ II features.

FITS BOXES & TRAILERS - UP TO 23' | *Tarps Sold Separately*

KIT NAME	ARMS	DRIVE	SPRINGS	MODE OF OPERATION	P/N
Hammer™ II	Straight	Ground Level	Flat Coil - 5	N/A	1809574
Hammer™ II 30°	30° Bend	Ground Level	Flat Coil - 5	N/A	1809578
Hammer™ II	Straight	Electric	Flat Coil - 5	Rotary Switch	1809555
Hammer™ II 30°	30° Bend	Electric	Flat Coil - 5	Rotary Switch	1809556
Hammer™ II	Straight	Electric	Flat Coil - 5	Rocker Switch	1810278
Hammer™ II 30°	30° Bend	Electric	Flat Coil - 5	Rocker Switch	1810279

ACCESSORIES

KIT NAME	P/N
Chain Guard - Hammer™ II GL Kits	1800639
Spring Trap II Hold-Down Kit	1128260
Steel Heavy-Duty Arm Rest Kit	1802008
Medium-Duty Arm Rest Kit	1802081
Steel Wind Deflector - 2 PC.	1809571

REPLACEMENT ARM (HOOP) KITS

KIT NAME	P/N
Hammer™ II Arm Kit - Straight Arms	1809557
Hammer™ II Arm Kit - Arms w/30° Bend	1809558

OPTIONS AND FEATURES

ELECTRIC OPERATION

DURABUILT™ SOLENOID KIT
P/N 1809047 - 12V KIT (8 GAUGE)
P/N 1809927 - 12V KIT (6 & 8 GAUGE)

MOTOR REVERSING SOLENOID
P/N 1703845

SOLENOID COVER
P/N 1703896

ROCKER SWITCH
P/N 1800602

ROTARY SWITCH
P/N 1110551

ROTARY SWITCH KIT
P/N 1802076

MANUAL OPERATION

CRANK BOX ASSEMBLY
P/N 1800178

MOTORS

DIRECT-DRIVE MOTOR 600 WATT - 12V
P/N 1802061

SPRINGS

FLAT COIL SPRING
P/N 1800763

TARP ROLLERS

STEEL ROLLER BAR
P/N 1800038

5000X

STEEL ARM SYSTEM

KEY FEATURES

- Aluminum Tarp Spool with Side Plates
- 1-1/4" Square Arms - 2-PC Galvanized
- High Mount Compatible
- Cab-Level Crank
  - Standard for P/N 1803906
- Ground-Level Crank
  - Standard for P/N 1803902
- Durabuilt™ Motor
  - Standard for 1803895
- Rotary Switch
  - Standard for 1803895

The 5000X is the most popular line of economical, yet dependable front-to-rear tarp systems. This system is available in a wide variety of models, differentiated by direct drive, chain drive manual cranks or Durabuilt™ direct-drive motor. All feature zinc-plated steel tubing and easy-to-mount, low-profile flat-coil torsion springs. The zinc coating prevents rust and enhances the 5000X professional look.

REPLACEMENT ARM (HOOP) KIT & PARTS

2-PC ALUM. ARM REPLACEMENT KITS	
5000X Arm Kit	1808764
Pivot Arm - R	1800240
Pivot Arm - L	1800241
Painted Upper Bent Arm - R	1800242
Painted Upper Bent Arm - L	1800243

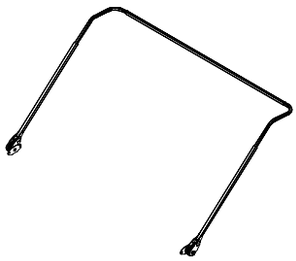

ARM PROFILES

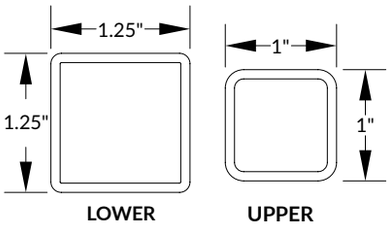

Table of Contents

Replacement Parts

MORE PRODUCT INFORMATION

Want to learn more? Simply scan to explore further details about 5000X features.

FITS BOXES & TRAILERS - UP TO 16' | *Tarps Sold Separately*

KIT NAME	ARMS	DRIVE	SPRINGS	MODE OF OPERATION	P/N
5000XDD	Galvanized	Direct Drive	Flat Coil - 3	N/A	1803906
5000XCD	Galvanized	Chain Drive	Flat Coil - 3	N/A	1803902
5000XEL	Galvanized	Electric	Flat Coil - 3	Rotary Switch	1803895
5000XEL	Galvanized	Electric	Flat Coil - 3	Rocker Switch	1810277

ACCESSORIES

KIT NAME	P/N
Chain Guard - 5000 GL Kit	1800036
Spring Trap™ II Hold-Down Kit	1128260
Steel Heavy-Duty Arm Rest Kit	1802008
Medium-Duty Arm Rest Kit	1802081
Steel Wind Deflector - 2 PC.	1801943

REPLACEMENT ARM (HOOP) KIT & PARTS

KIT NAME	P/N
5000X Arm Kit	1808764
Pivot Arm - R	1800240
Pivot Arm - L	1800241
Painted Upper Bent Arm - R	1800242
Painted Upper Bent Arm - L	1800243

OPTIONS AND FEATURES

ELECTRIC OPERATION

DURABUILT™ SOLENOID KIT
P/N 1809047 - 12V KIT (8 GAUGE)
P/N 1809927 - 12V KIT (6 & 8 GAUGE)

MOTOR REVERSING SOLENOID
P/N 1703845

SOLENOID COVER
P/N 1703896

ROCKER SWITCH
P/N 1800602

MANUAL OPERATION

ROTARY SWITCH
P/N 1110551

ROTARY SWITCH KIT
P/N 1802076

CRANK BOX ASSEMBLY
P/N 1800088

MOTORS

DIRECT-DRIVE MOTOR 900 WATT - 12V
P/N 1704878

CRANK CONVERSION KIT
P/N 1800049

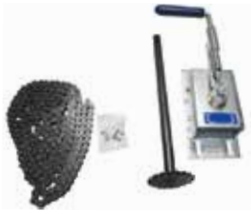

CHAIN GUARD BOX
P/N 1800636

SPRINGS

FLAT COIL SPRING
P/N 1800763

TARP SELECTING DIRECTIONS

When selecting the tarp length, add at least 2' to the length of the body being covered.

HD MESH

TARP LENGTH	TARP WIDTH	P/N
10'	84"	1800141
	90"	1800000
12'	84"	1801280
	90"	1800001
14'	84"	1801281
	90"	1800002
16'	84"	1801282
	90"	1800003
18'	84"	1801283
	90"	1800004
20'	84"	1801284
	90"	1800005
22'	84"	1801459
	90"	1800006
24'	84"	1801429
	90"	1800007
26'	84"	1801460
	90"	1800008
28'	84"	1801578
	90"	1800652
30'	84"	1801577
	90"	1800009
32'	84"	1800142
	90"	1800010
34'	84"	1802132
	90"	1802163
36'	84"	1802286
	90"	1802100
38'	84"	1802936
	90"	1808617
40'	84"	1802365
	90"	1808618
42'	84"	1802369
	90"	1803546
44'	84"	1803029
	90"	1802853

MIGHTY MESH®

TARP LENGTH	TARP WIDTH	P/N
12'	84"	1802185
	90"	1802318
14'	84"	1802262
	90"	1802287
16'	84"	1802220
	90"	1802179
18'	84"	1802209
	90"	1803769
20'	84"	1802139
	90"	1803792
22'	84"	1802214
	90"	1803761
24'	84"	1802215
	90"	1802208
26'	84"	1802830
	90"	1802238
28'	84"	1802431
	90"	1803789

MULTICOLORED PVC

TARP LENGTH	TARP WIDTH	P/N
10'	90"	1801741
12'	84"	1801731
	90"	1801742
14'	84"	1801732
	90"	1801743
16'	84"	1801733
	90"	1801744
18'	84"	1801734
	90"	1801745
20'	84"	1801735
	90"	1801746
22'	84"	1801736
	90"	1801747
24'	84"	1801737
	90"	1801748
26'	84"	1801738
	90"	1801749
28'	84"	1801739
	90"	1801750
30'	84"	1801740
	90"	1801751
32'	90"	1801752
34'	90"	1801753
36'	90"	1801754
38'	90"	1801755
40'	90"	1801756

NOTE: Additional fabrics available. Gator Mesh (trampoline fabric), 70% knitted mesh and HD knitted polyester.

LUMITE (ASPHALT)

TARP LENGTH	TARP WIDTH	P/N
10'	90"	1800143
12'	84"	1800562
	90"	1800074
14'	84"	1800563
	90"	1800075
16'	84"	1800564
	90"	1800076
18'	84"	1800565
	90"	1800077
20'	84"	1800566
	90"	1800078
22'	84"	1800567
	90"	1800079
24'	84"	1800568
	90"	1801580
26'	84"	1800569
	90"	1801581

18-OZ. VINYL (ASPHALT)

TARP LENGTH	TARP WIDTH	P/N
10'	84"	1800522
	90"	1800256
12'	84"	1800523
	90"	1800257
14'	84"	1800524
	90"	1800258
16'	84"	1800525
	90"	1800259
18'	84"	1800526
	90"	1800260
20'	84"	1800527
	90"	1800261
22'	84"	1800528
	90"	1800262
24'	84"	1800529
	90"	1800263
26'	84"	1800530
	90"	1800264

18-OZ. VINYL (ASPHALT) W/SIDE FLAPS

TARP LENGTH	TARP WIDTH	P/N
16'	108"	*1801607
	114"	*1801606
18'	108"	*1801608
	114"	*1801022
20'	108"	*1801609
	114"	*1801023
22'	108"	*1801610
	114"	*1801611

*Includes shock cord.

DONOPRENE (ASPHALT)

TARP LENGTH	TARP WIDTH	P/N
10'	84"	1810238
	90"	1810247
12'	84"	1810239
	90"	1810248
14'	84"	1810240
	90"	1810249
16'	84"	1810241
	90"	1810250
18'	84"	1810242
	90"	1810251
20'	84"	1810243
	90"	1810252
22'	84"	1810244
	90"	1810253
24'	84"	1810245
	90"	1810254
26'	84"	1810246
	90"	1810255

DONOPRENE (ASPHALT) W/SIDE FLAPS

TARP LENGTH	TARP WIDTH	P/N
16'	108"	*1810291
	114"	*1810295
18'	108"	*1810292
	114"	*1810296
20'	108"	*1810293
	114"	*1810297
22'	108"	*1810294
	114"	*1810298

*Includes shock cord.
**Non stocked tarp, expect 7 day lead-time.

NOTE: Additional asphalt-hauling fabrics available: RFL, urethane-coating airbag and 22-oz. vinyl.

UT TARP SYSTEM

KEY FEATURES

- “Tarp-Locking” Crank Handle
- Molded HDPE End Caps
- 3-PC Adjustable Width Aluminum Roller Bar
- Heavy-Duty Bearings
- Adjustable Width from 86" – 104"
- Tension Ratchet

SIMPLE AND SECURE OPERATION

The UT Tarp System™ ships with a pre-assembled crank handle. The overall width of the system can be set from 86" – 104" right out of the box. For applications narrower than 86" it is simple to cut the roll tube(s) accordingly. The kit bolts or welds directly to the bearing plates incorporated into most trailers and truck bodies. For bodies without a built in tarp system, kit P/N 1809905 includes mounting plates and fasteners that you will need to mount your new UT Tarp System™. Kits contain hardware only. Tarps sold separately.

The UT Tarp System™ and can be paired with any of our stock tarp materials, including PVC mesh, Asphalt Lumite, Donoprene or 18-oz. vinyl. Replacement tarps are in stock and readily available. To cover, pull tarp to the back of the body and tie off the pull rope to brackets (provided). Locking-sprocket crank secures tarp. To uncover, untie the pull rope using the crank handle. 1-PC and 3-PC pull bar assemblies are available.

Table of Contents

Replacement Parts

MORE PRODUCT INFORMATION
Want to learn more? Simply scan to explore further details about UT Tarp System™ features.

FITS BOXES & TRAILERS - UP TO 23' | *Tarps Sold Separately*

KIT NAME	BOX WIDTH	P/N
UT Tarp System™	86" to 104"	1809414
UT Tarp System™ w/Mtg Plates	86" to 104"	1809905
UT Tarp System™ w/1-PC. Pull Bar	86" to 104"	1809908
UT Tarp System™ w/3-PC. Pull Bar	86" to 104"	1809934
UT Tarp System™ w/3-PC. Pull Bar & Mtg Plates	86" to 104"	1809935

NOTE: Has crank with locking sprocket.

ACCESSORIES

DESCRIPTION	FEATURES	P/N
1-Piece Pull Bar Kit w/Hdw	Ships UPS Standard Rate	1809846
3-Piece Pull Bar Kit w/Hdw	Ships UPS Standard Rate	1809829
Mounting Plate Kit w/Hdw	For Trailers & Bodies that DO NOT have Pre-Fab Mounting Holes for Tarp System	1809784

DURAPULL

GALVANIZED STEEL TARP HOUSING

The 12-gauge heavy-duty galvanized steel housing protects the tarp and spring-loaded spool from falling materials. The housing has an angled top to ensure self-cleaning, so any material dropped on it will fall back into the truck/trailer box.

SPRING-LOADED TARP SPOOL

The tarp spool is made of aluminum and has an extruded groove that allows for easy installation or removal of the tarp. An internally mounted torsion spring lets the tarp spool automatically retract and wind the tarp.

TENSION RATCHET

This allows the tarp spool to be easily pre-loaded for operation, and it is also easily adjusted to increase or decrease spring tension.

TARP REMOVAL/REPLACEMENT

The mesh or solid vinyl tarp can be easily removed, reinstalled or replaced without removing the tarp spool or the spring tension.

TARP GUIDES

Tarp guides help keep the tarp centered on top of the box by hanging over the side and keeping the pull bar from moving from side-to-side.

MOUNTING SYSTEM

The tarp housing mounting system allows the tarp housing to be easily removed, if necessary, for seasonal changes in hauling.

TARP SPOOL REMOVAL/MAINTENANCE

If the tarp spool ever needs to be removed, it can be removed fully assembled without having to disassemble or remove the tarp housing.

KEY FEATURES

- 12-Gauge Galvanized Steel Housing
- Spring-Loaded Tarp Spool
- Steel Mounting Strip - Standard with Steel Kits
- Aluminum Mounting Strip - Standard with Aluminum Kits
- Standard Tarp Guide
- External Spring Tension Adjustment

Table of Contents

Replacement Parts

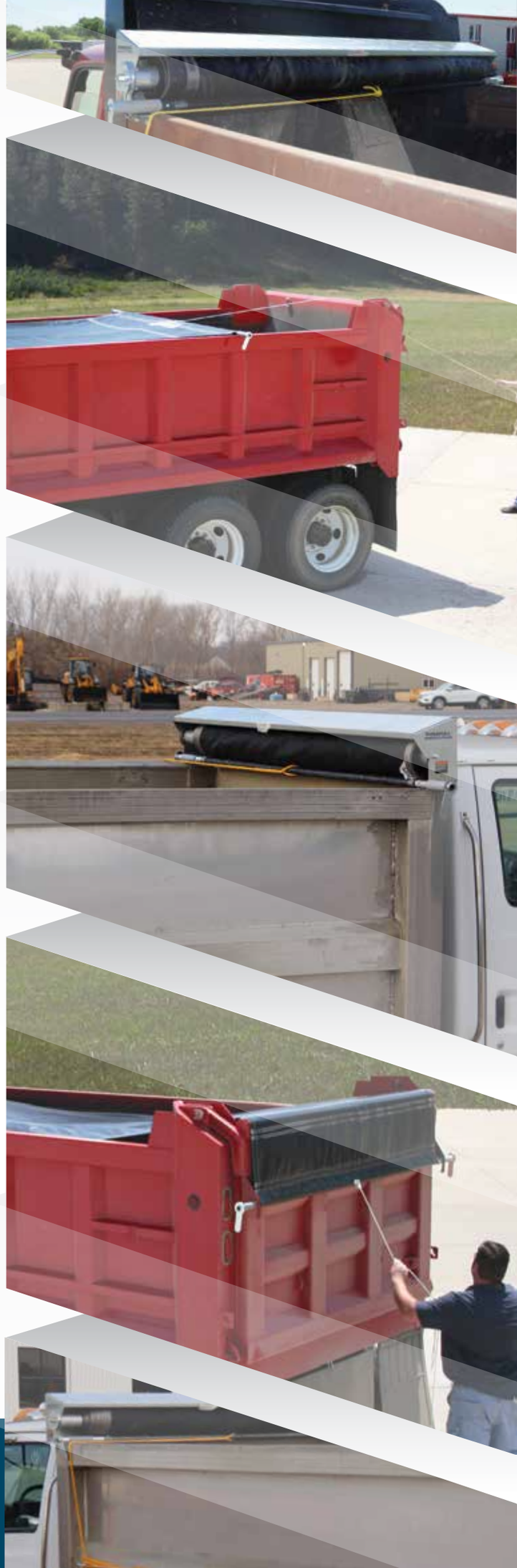

MORE PRODUCT INFORMATION

Want to learn more? Simply scan to explore further details about DuraPull™ features.

FITS BOXES & TRAILERS - UP TO 23' | *Tarp Sold Separately*

KIT NAME	BOX WIDTH	MOUNTING STRIPS	P/N
DuraPull™	80"	Steel	1125632
DuraPull™	84"	Steel	1125634
DuraPull™	88"	Steel	1125636
DuraPull™	90"	Steel	1126645
DuraPull™	92"	Steel	1125638
DuraPull™	96"	Steel	1125640
DuraPull™	102"	Steel	1125642

FITS BOXES & TRAILERS - UP TO 23' | *Tarp Sold Separately*

KIT NAME	BOX WIDTH	MOUNTING STRIPS	P/N
DuraPull™	80"	Aluminum	1125633
DuraPull™	84"	Aluminum	1125635
DuraPull™	88"	Aluminum	1125637
DuraPull™	90"	Aluminum	1126646
DuraPull™	92"	Aluminum	1125639
DuraPull™	96"	Aluminum	1125641
DuraPull™	102"	Aluminum	1125643

2000SR

KEY FEATURES

- Tarp Spool with Side Plates
- Adjustable Width Steel Housing
  - Standard for 1800047
- Aluminum Pull Bar
- Armless Spring Return
- Adjustable - Width Roller Bar
- External Spring Tension Adjustment

FITS YOUR TRUCK RIGHT OFF THE SHELF

The 2000SR uses a spring return roller bar to retract the tarp automatically. This system can be ordered with or without the expandable tarp housing. The telescoping aluminum roller has no required assembly; simply extend it to the proper width before installing. Sealed bearing construction includes a 3/4₆ center support shaft for durable heavy-duty operation. An external tensioner allows adjustments without removing the tarp.

LANDSCAPE BOXES | DUMP TRAILERS

FITS BOXES & TRAILERS - UP TO 23' | *Tarps Sold Separately*

KIT NAME	P/N
2000SR	1800047
2000SR - No Housing	1800502

Table of Contents

Replacement Parts

MORE PRODUCT INFORMATION

Want to learn more? Simply scan to explore further details about 2000SR features.

TARP SELECTING DIRECTIONS

When selecting the tarp length, add at least 2' to the length of the body being covered.

HD MESH

TARP LENGTH	TARP WIDTH	P/N
10'	84"	1800141
	90"	1800000
12'	84"	1801280
	90"	1800001
14'	84"	1801281
	90"	1800002
16'	84"	1801282
	90"	1800003
18'	84"	1801283
	90"	1800004
20'	84"	1801284
	90"	1800005
22'	84"	1801459
	90"	1800006
24'	84"	1801429
	90"	1800007
26'	84"	1801460
	90"	1800008

18-OZ. VINYL (ASPHALT)

BOX LENGTH	TARP WIDTH	P/N
10'	84"	1800522
	90"	1800256
12'	84"	1800523
	90"	1800257
14'	84"	1800524
	90"	1800258
16'	84"	1800525
	90"	1800259
18'	84"	1800526
	90"	1800260
20'	84"	1800527
	90"	1800261
22'	84"	1800528
	90"	1800262
24'	84"	1800529
	90"	1800263
26'	84"	1800530
	90"	1800264

18-OZ. VINYL (ASPHALT) W/SIDE FLAPS

BOX LENGTH	TARP WIDTH	P/N
16'	108"	*1801607
	114"	*1801606
18'	108"	*1801608
	114"	*1801022
20'	108"	*1801609
	114"	*1801023
22'	108"	*1801610
	114"	*1801611

*Includes shock cord.

DONOPRENE (ASPHALT) W/SIDE FLAPS

BOX LENGTH	TARP WIDTH	P/N
16'	108"	*1810291
	114"	*1810295
18'	108"	*1810292
	114"	*1810296
20'	108"	*1810293
	114"	*1810297
22'	108"	*1810294
	114"	*1810298

*Includes shock cord.
**Non stocked tarp, expect 7 day lead-time.

NOTE: Additional asphalt-hauling fabrics available: RFL, urethane-coating airbag and 22-oz. vinyl.

MULTICOLORED PVC

TARP LENGTH	TARP WIDTH	P/N
10'	90"	1801741
12'	84"	1801731
	90"	1801742
14'	84"	1801732
	90"	1801743
16'	84"	1801733
	90"	1801744
18'	84"	1801734
	90"	1801745
20'	84"	1801735
	90"	1801746
22'	84"	1801736
	90"	1801747
24'	84"	1801737
	90"	1801748
26'	84"	1801738
	90"	1801749

NOTE: Additional fabrics available. Gator Mesh (trampoline fabric), 70% knitted mesh and HD knitted polyester.

LUMITE (ASPHALT)

TARP LENGTH	TARP WIDTH	P/N
10'	90"	1800143
12'	84"	1800562
	90"	1800074
14'	84"	1800563
	90"	1800075
16'	84"	1800564
	90"	1800076
18'	84"	1800565
	90"	1800077
20'	84"	1800566
	90"	1800078
22'	84"	1800567
	90"	1800079
24'	84"	1800568
	90"	1801580
26'	84"	1800569
	90"	1801581

DONOPRENE (ASPHALT)

BOX LENGTH	TARP WIDTH	P/N
10'	84"	1810238
	90"	1810247
12'	84"	1810239
	90"	1810248
14'	84"	1810240
	90"	1810249
16'	84"	1810241
	90"	1810250
18'	84"	1810242
	90"	1810251
20'	84"	1810243
	90"	1810252
22'	84"	1810244
	90"	1810253
24'	84"	1810245
	90"	1810254
26'	84"	1810246
	90"	1810255

SHUR-TRAK II

COMPARING SHUR-TRAK™ II AND SHUR-TRAK™ II SHORTSTOP™

Fully deployed, the standard tarp-over-rail design gives coverage several inches over the side rail to shed water better. If water resistance is not a factor, our Short-Stop™ tarp option will eliminate friction, helping to extend the life of your tarp. The tarp stops short of the inside rail.

LOW FRICTION AND HIGH STRENGTH

Our exclusive Twist-Lok™ bow shanks, constructed of low-friction/high-strength polymer, twists off without removing the cable. The shanks are available in standard and Short-Stop™ styles that let you replace damaged bows faster.

MOTOR OPTIONS AVAILABLE

Choose between our Durabuilt™ motor for systems under 25' and our heavy-duty chain drive motor for systems over 24'. An electric system is now available with the ShurLink™ wireless remote control.

REDUCES BINDING

Wheel wind guards with an inline design can be added as needed to reduce binding. Another option is a continuous wind guard with an offset arm which positions the wind hooks under the anchor as the system opens and closes. It's a wider design, running the full length of the trailer. Close proximity to the bottom of the bow shanks limits wind up underneath the sides of the tarp. This is ideal for replacement tarps eliminating the problem of existing anchors lining up.

TENSION ADJUSTMENTS MADE EASY

The improved cable tension scale is equipped with a thrust washer to make adjustments easy. A sight gauge shows if more tension is needed, a correction you can make with a few twists of your wrist.

REDUCES TARP STRESS AND SAGGING

A rear bow stabilizer prevents the rear bow from rocking. This reduces stress on the tarp, cable and bow shanks while lessening tarp wear at the point of attachment. In addition, it helps keep the tarp from sagging and wearing between the last two bows.

REMOTE OPTIONS AVAILABLE

A cab-installed rocker switch allows you to open/close the system from your truck cab. Our optional 30-channel ShurLink PRO™ or 5-channel ShurLink EZR™ wireless remote controls are available. Control multiple Shurco wireless products with a single remote at ranges of 150'.

KEY FEATURES

- Twist-Lok™ Bow Shanks
- Rolling Wheel Wind Guards with Standard or Continuous Wind Anchors
- Cable Tension Scale or Adjustable Rear Pulley
- Rear Bow Stabilizer
- Electric Upgrades Available

Table of Contents

Replacement Parts

MORE PRODUCT INFORMATION

Want to learn more? Simply scan to explore further details about Shur-Trak™ II features.

SHUR-TRAK™ II FEATURES

Start with your pulley-to-pulley measurement, which is critical to determine the correct length of your system. The over-the-rail tarp that comes standard on the complete kits helps shed water better. If water resistance is not a factor, our Shur-Trak™ II ShortStop™ kits have a tarp that stops short of the trailer to eliminate friction. A continuous wind anchor is also available if desired. Our universal landing's bolt-together design squares the radius corners and can mount out to 18" (square corners only) for more loading space on belly dumps.

SHUR-TRAK™ II COMPLETE KITS | *Tarps Included*

PULLEY-TO-PULLEY LENGTH*	ADJUSTABLE DRIVE		UNIVERSAL LANDING** FLAT OR RAISED COVER	
	MESH	VINYL	MESH	VINYL
9'9" to 12'8"				
12'9" to 15'7"				
15'8" to 18'6"				
18'7" to 21'5"				
21'6" to 24'4"				
24'5" to 27'3"				
27'4" to 30'2"				
30'3" to 33'1"				
33'2" to 36'				
36'1" to 38'11"				
39' to 41'10"				
41'11" to 44'9"				

*Pulley-to-pulley meas. is critical to determining correct length of system.
**Universal landing may be extended up to 18" on sq. fronts. Call for details.

SHUR-TRAK™ II COMPLETE KITS w/CONTINUOUS WIND ANCHORS | *Tarps Included*

PULLEY-TO-PULLEY LENGTH*	ADJUSTABLE DRIVE		UNIVERSAL LANDING** FLAT OR RAISED COVER	
	MESH	VINYL	MESH	VINYL
9'9" to 12'8"				
12'9" to 15'7"				
15'8" to 18'6"				
18'7" to 21'5"				
21'6" to 24'4"				
24'5" to 27'3"				
27'4" to 30'2"				
30'3" to 33'1"				
33'2" to 36'				
36'1" to 38'11"				
39' to 41'10"				
41'11" to 44'9"				

*Pulley-to-pulley meas. is critical to determining correct length of system.
**Universal landing may be extended up to 18" on sq. fronts. Call for details.

HARDWARE QTY

PULLEY-TO-PULLEY LENGTH	WIND-GUARDS	CABLE LENGTH (PER SIDE)	BOW QUANTITY*
9'9" to 12'8"	1/Side	29'4"	4
12'9" to 15'7"	1/Side	35'2"	5
15'8" to 18'6"	1/Side	41'	6
18'7" to 21'5"	2/Side	46'10"	7
21'6" to 24'4"	2/Side	52'8"	8
24'5" to 27'3"	2/Side	58'6"	9
27'4" to 30'2"	3/Side	64'4"	10
30'3" to 33'1"	3/Side	70'2"	11
33'2" to 36'	3/Side	76"	12
36'1" to 38'11"	4/Side	81'10"	13
39' to 41'10"	4/Side	87'8"	14
41'11" to 44'9"	4/Side	93'6"	15

*The two (2) bows in the rear bow stabilizer are counted as one (1).

STANDARD FEATURES AND OPTIONS

A	**ELECTRICS**	
1	HD Elec. Chain Drive Kit - Side Mount - 50'	Add
2	HD Elec.Chain Drive Kit - Side Mount - 75'	Add
3	HD Elec. Chain Drive Kit - Side Mount - 100'	Add
4	Durabuilt Elec. Chain Drive Kit - Side Mount - 50'	Add
5	Durabuilt Elec. Chain Drive Kit - Side Mount - 75'	Add
6	Durabuilt Elec. Chain Drive Kit - Side Mount - 100'	Add
7	Durabuilt Elec. Drive Kit - Side Mount - 50'	Add
8	Durabuilt Elec. Drive Kit - Side Mount - 75'	Add
9	Upgrade to ShurLink EZR™ w/o Express Mode (For HD Motor Only)	Add
10	Solar HD Electric Upgrade	Add
11	Solar Durabuilt Electric Motor Upgrade	Add
B	**FRONT DRIVE ASSEMBLY**	
1	Flat Front Cover - For Adjustable Drive	Add
2	Raised Front Cover - For Adjustable Drive	Add
C	**CHAIN DRIVES**	
•	Direct Drive 83" Crank Arm	Standard
1	Manual Crank Chain Drive	Add
2	Crank Reducer	Add
3	Crank Arm Extension - 114"	Add
D	**BOWS**	
•	12" Rise Adjustable-Width Bows	Standard
1	16" High Rise Bows	N/C
2	Flat Bow - For Short-Stop™ Only	N/C
3	6" Bows - For Short-Stop™ Only	N/C
4	12" Bows - For Short-Stop™ Only	N/C
5	18" Bows - For Short-Stop™ Only	N/C
E	**BOW SHANKS**	
•	Twist-Lok™ Bow Shanks	Standard
1	Extended Twist-Lok™ Bow Shank	Add/Bow
2	Bow Stops (2) - Used w/Raised Shield	Add/Set
3	Bow Lift Kit (High Lift Hinges)	N/C
F	**REAR BOW SUPPORT**	
•	Rear Bow Stabilizer	Standard
G	**WIND-GUARDS**	
•	Rolling Wheel Wind-guards	Standard
1	Additional Wind-guards (2)	Add/Set
H	**REAR PULLEYS**	
•	Rear Pulley W/Tension Adjustment	*Standard
1	Pulley Bracket w/Cable Tension	N/C
2	Pulley Bracket Extended w/Cable Tension	N/C
J	**CABLES**	
•	Galvanized Steel 1/4" Cable	Standard
1	Stainless Steel 1/4" Cable (Cable Length x 2)	Add/Ft.
K	**CABLE TENSION**	
•	Cable Tension Scale	
L	**RETAINERS**	
•	Offset Crank Retainer	Standard
1	Offset Pinless Crank Retainer	Add
M	**TARP OPTIONS**	
•	18-Oz Vinyl Tarp - Choice of Color	**Standard
1	Mesh Tarp	***Deduct
2	Multicolored Fabric (Per Added Color)	Add
3	Extended Rear Tail Flap (Up to 18")	Add
N	**OTHER OPTION**	
1	Jack Shaft	Add
2	Bridge Plates (2)	Add/Set
3	Landing Brace - For Belly Dumps Only	Add
4	18' - UHMW Glide Strip	Add
5	24' - UHMW Glide Strip	Add
6	30' - UHMW Glide Strip	Add
7	40' - UHMW Glide Strip	Add
8	48' - UHMW Glide Strip	Add

*Does NOT include cable tension scale.
**Available colors: red, black, royal blue, white, yellow, green, maroon or gray. Grape and yellow NA in22-OZ. For tan CALL.
***Available in black only.

NOTE: The Durabuilt™ motor is recommended for trailers up to 25'; longer trailers should utilize the heavy-duty motor.

SHORTSTOP™ COMPLETE KITS | *Tarps Included*

PULLEY-TO-PULLEY LENGTH*	ADJUSTABLE DRIVE		UNIVERSAL LANDING FLAT OR RAISED COVER	
	MESH	VINYL	MESH	VINYL
9'9" to 12'8"				
12'9" to 15'7"				
15'8" to 18'6"				
18'7" to 21'5"				
21'6" to 24'4"				
24'5" to 27'3"				
27'4" to 30'2"				
30'3" to 33'1"				
33'2" to 36'				
36'1" to 38'11"				
39' to 41'10"				
41'11" to 44'9"				

SHORTSTOP™ COMPLETE KITS w/CONTINUOUS WIND ANCHORS | *Tarps Included*

PULLEY-TO-PULLEY LENGTH*	ADJUSTABLE DRIVE		UNIVERSAL LANDING** FLAT OR RAISED COVER	
	MESH	VINYL	MESH	VINYL
9'9" to 12'8"				
12'9" to 15'7"				
15'8" to 18'6"				
18'7" to 21'5"				
21'6" to 24'4"				
24'5" to 27'3"				
27'4" to 30'2"				
30'3" to 33'1"				
33'2" to 36'				
36'1" to 38'11"				
39' to 41'10"				
41'11" to 44'9"				

*Pulley-to-pulley meas. is critical to determining correct length of system.
**Universal landing may be extended up to 18" on sq. fronts. Call for details.

HARDWARE QTY

PULLEY-TO-PULLEY LENGTH	WIND-GUARDS	CABLE LENGTH (PER SIDE)	BOW QUANTITY*
9'9" to 12'8"	1/Side	29'4"	4
12'9" to 15'7"	1/Side	35'2"	5
15'8" to 18'6"	1/Side	41'	6
18'7" to 21'5"	2/Side	46'10"	7
21'6" to 24'4"	2/Side	52'8"	8
24'5" to 27'3"	2/Side	58'6"	9
27'4" to 30'2"	3/Side	64'4"	10
30'3" to 33'1"	3/Side	70'2"	11
33'2" to 36'	3/Side	76"	12
36'1" to 38'11"	4/Side	81'10"	13
39' to 41'10"	4/Side	87'8"	14
41'11" to 44'9"	4/Side	93'6"	15

*The two (2) bows in the rear bow stabilizer are counted as one (1).

TARP PRICING DIRECTIONS

Pricing given is for black fabric ONLY. For all other colors, add 15% up-charge to the price of the tarp. Additional available colors: red, black, royal blue, white, yellow, green, maroon or gray. For tan CALL.

SHUR-TRAK™ II

PULLEY-TO-PULLEY	MESH	18 OZ VINYL
9'9" to 12'8"		
12'9" to 15'7"		
15'8" to 18'6"		
18'7" to 21'5"		
21'6" to 24'4"		
24'5" to 27'3"		
27'4" to 30'2"		
30'3" to 33'1"		
33'2" to 36'		
36'1" to 38'11"		
39' to 41'10"		
41'11" to 44'9"		

SHUR-TRAK™ II SHORTSTOP™

PULLEY-TO-PULLEY	MESH	18 OZ VINYL
9'9" to 12'8"		
12'9" to 15'7"		
15'8" to 18'6"		
18'7" to 21'5"		
21'6" to 24'4"		
24'5" to 27'3"		
27'4" to 30'2"		
30'3" to 33'1"		
33'2" to 36'		
36'1" to 38'11"		
39' to 41'10"		
41'11" to 44'9"		

OPTIONS AND FEATURES

BOW SHANKS

BRIDGE PLATE

- Transitions Gap in Top Rails or Side-Boards so Bow Shanks can Slide with No Interference

HIGH-LIFT BOW SHANK

- For High-Lift Gate Applications
- Bow Shank Slides Past Gate Hydraulics to Close the Tarp

TWIST-LOK™

- Compression-Molded to Slide Along Rail
- Cane be Twisted Off or On without Removing the Cable

EXTENDED TWIST-LOK™

- Spans Self-Cleaning Top Rails or Wide-Spaces Cable Positioning
- Used on Tapered Trailers

SHORTSTOP™ SHANK

- Eliminates Friction to Help Extend the Life of Your Tarp

CABLES

CABLE TENSION SCALE

- Equipped with Thrust Washer for Easy Adjustments

CABLES CONT.

GALVANIZED STEEL

- Corrosion Resistant
- 7,000 lb. Break Strength for Secure Tarp

STAINLESS STEEL

- Strength Performance Matches Galvanized Steel Cable
- Increased Rust Insurance

UHMW GLIDE STRIP

- Levels Uneven Top Rails on Cable System

CRANK RELOCATERS

DOUBLE IDLER

- Sprocket Gear Connection on Idler so Chain Crank can be Routed Around Obstacles

JACK SHAFT

- Allows Chain Drive Relocation from Side to Front
- Good Selection for V-Bottom Trailers

CRANK DRIVES

CRANK ARM EXTENSION

- Extends Length of a Standard Direct-Drive Crank from 83" to 114" for Taller Trailers

CRANK REDUCER

- Allows Direct-Drive Crank Operation at a 2:1 Gear Reduction for Easier Cranking

DIRECT-DRIVE CRANK

- Connects Directly to the End of the Drive Shaft with U-Joint

MAN. CRANK CHAIN DRIVE

- Permits Relocation of Handle at Ground Level Using Chain-and-Sprocket Drive

CRANK RETAINERS

OFFSET

- Holds Direct-Drive Crank in J-Hook Secured with Wire Lock Pin when Crank is Not in Use

OFFSET PINLESS

- Automatic Spring-Loaded Lock Replaces Wire Lock Pin to Ensure Crank Stays in Place

ELECTRIC OPERATION

MOTOR REVERSING SOLENOID

- 12V Solenoid with 2 Point Mount with Black Wire

SOLENOID COVER

- Mounts Over Solenoid to Protect Wire Connections

SHURLINK EZR™ REMOTE

- Simple Two-Button Remote
- Up to 5 Devices Allowed

SHURLINK PRO™ REMOTE

- Six-Button Remote with Digital Screen
- Up to 30 Devices Allowed

SHURLINK RECEIVER - NON EXPRESS

- Selection of Receivers (RX'S) for almost any Application
- Two-Piece Solenoid Enclosure

UNIVERSAL LANDING

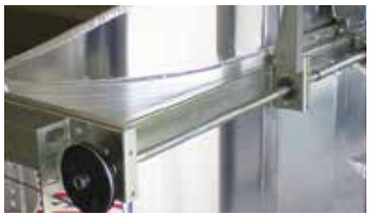

- Permits Entire Front Assembly to be Installed at Once
- Easily Adjusts to Correct Width

STANDARD

- Lets Drive Cable Run Front to Back of Trailer
- Mounts Horizontal, Vertical or Angled

FRONT COVERS

ADJUSTABLE DRIVE

- 4 Pillow Block Bearings
- Center Coupler to Adjust Pulley-to-Pulley Width

FLAT

- Flat Top-Channel Shape Guards Drive Shaft Assembly and Provides Tarp Mounting Surface

LANDING BRACE

- Additional Support for Universal Landing when Extended Off the Front of Belly-Dump Trailers

RAISED

- Guards Drive Shaft Assembly
- Provides a Raised Wind Barrier and Tarp-Mounting Surface

MOTORS

DURABUILT™ MOTOR w/COVER - 2 ⅜" SHAFT - 3⁄16" KEYWAY w/COVER

- Available Motor P/N: 1125700
- 3-Year Warranty

SHUR-TRAK™ HD MOTOR

- Available Motor P/N: 1122442
- 3-Year Warranty

REAR PULLEYS

ADJUSTABLE

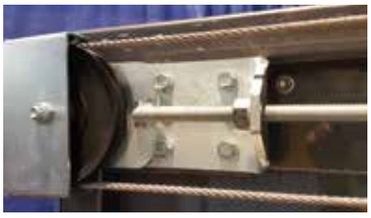

- For Fast Adjustment to Drive Cables
- Standard Maintenance with Minimal Tools

EXTENDED BRACKET

- Allows Tarp to Extend Fully to Rear if Mounting Surface is too Far Forward for Standard

WIND-GUARDS

CONTINUOUS DESIGN

- Wider Design with Offset Arm Places Wind-Hooks Under Anchor for the Full Length of the Trailer

WHEEL DESIGN

- Inline Design can be Added as Needed to Reduce Binding and Decrease Wind up Under the Tarp

SHUR-LOK

SHUR-FLEX™ CRANK ARMS

- Pivots on a Knuckle and Folds for Storage
- Stores on the Side to Accommodate Rear Doors

DURABOW™

- Molded Resin Bow Supports Tarp

TURNING POINT™ BOW SYSTEM

- Angled Bracket Allows Bow to Move Freely
- Swings Up and Over Loads without Binding

FLEXIBLE EASY-OFF TARP STOP

- Bends Even in Subzero Cold
- Impact and Abrasion Resistant with Embedded Safety Plates

SHUR-RETURN™

- Non-Stretch Solid Braid Rope with Heavy-Duty Steel Tension Spring
- Works Well in Cold Weather

Shur-Lok® provides you with watertight dependability for increased productivity and less downtime. The Shur-Flex™ crank offers convenient flexibility. It folds at the knuckle and secures with offset or pinless offset retainers. No more pin-and-cable hassles.

The front fabric cap makes it easier to come over the top of the doghouse. Double bows secure into a double bow bracket – exactly the right spacing for tightening down the front of the tarp. The front stretch roll return guides the roll tarp over the end cap. Reinforced stitching along the radius corner of the fabric cap helps the tarp withstand the stresses of highway speed.

**Electric Shur-Lok® options are available for belly dumps and dump bodies. Call for special pricing.*

Table of Contents

Replacement Parts

MORE PRODUCT INFORMATION

Want to learn more? Simply scan to explore further details about the Shur-Lok® features.

COMPLETE KITS

BOX LENGTH	HD BOWS	DURABOW™
10'		
11'		
12'		
13'		
14'		
15'		
16'		
17'		
18'		
19'		
20'		
21'		
22'		
23'		
24'		

HARDWARE QTY

SIZE	TARP STOPS	U-CLAMPS	HD BOWS	DURABOW™
10' to 14'	3	6	0	2
15' to 18'	3	6	1	3
19' to 22'	4	8	1	4
23' to 24'	4	8	1	5

STANDARD FEATURES AND OPTIONS

A	LATCHPLATES	
•	Aluminum Latchplate	Standard
B	TARP STOPS	
•	6" Offset Flex. Easy-Off Tarp Stop - HD Bow Kit	Standard
•	Easy-Off Tarp Stops - Durabow™ Kit	Standard
1	Flexible Easy-Off Tarp Stop	Add/Ea.
2	6" Offset Easy-Off Tarp Stop	Add/Ea.
C	BOWS/BRACKETS	
1	Additional Heavy-Duty Bows	Add/Ea.
2	Aluminum Brackets - For Durabow™ (2)	Add/Set
D	END CAPS	
•	Aluminum (LR/HR) End Caps	Standard
1	Galvanized (LR/HR) Rear Cap	Deduct
2	Fabric (LR/HR) Rear Cap	Add
3	No Rear Cap	Deduct
4	Galvanized (LR/HR) Front Cap	Deduct
5	Fabric (LR/HR) Front Cap	Add
6	No Front Cap	Deduct
E	RIDGE SUPPORTS	
•	Ridgepole - Not Available for Durabow™ Kit	Standard
F	ROLL RETURN	
•	Shur-Return™ - HD Bow Kit	Standard
•	Stretch Cord Return - Durabow™ Kit	Standard
G	CRANK ARMS	
•	96" Shur-Flex™ Crank Arm	Standard
1	80" Shur-Flex™ Crank Arm	N/C
2	Standard Crank Arm w/80" Extension	Deduct
3	Standard Crank Arm w/96" Extension	Deduct
H	RETAINERS	
•	Offset Retainers (4 with Shur-Flex™)	Standard
•	Offset Retainers (2 with Standard Crank)	Standard
1	Offset Pinless Retainers (4)	Add/Set
2	Offset Pinless Retainers (2)	Add/Set
J	TARP OPTIONS	
•	22-Oz Vinyl Tarp - Choice of Color	*Standard
1	Multicolored Fabric (Per Added Color)	Add
2	Tarp Reinforcements	Add/Ft.
K	OTHER OPTIONS	
1	Standard Tarp Repair Kit	Add
2	Professional Tarp Repair Kit	Add
3	Bow Sock	Add/Ea.
4	Molded Roll Tube Deflectors (2)	Add/Set

*Available colors: black, red, white, royal blue, green, gray, maroon, yellow and grape. Grape and Yellow are in 22-Oz. For tan CALL.

NOTE: There is NO deduction in cost if you downgrade to 18-Oz. fabric and NO warranty on the tarp.

DUMP BODIES

COMPLETE KITS | *Tarps Included*

BOX LENGTH	HD BOWS	DURABOW™	TURNING POINT™
10'			
11'			
12'			
13'			
14'			
15'			
16'			
17'			
18'			
19'			
20'			
21'			
22'			
23'			
24'			

HARDWARE QTY

SIZE	TARP STOPS	U-CLAMPS	HD BOWS	DURABOW™	TURNING POINT™
10' to 14'	3	6	0	2	3
15' to 18'	3	6	1	3	3
19' to 22'	4	8	1	4	4
23' to 24'	4	8	1	5	4

STANDARD FEATURES AND OPTIONS

A	LATCHPLATES	
•	Aluminum Latchplate	Standard
B	TARP STOPS	
•	Easy-Off Tarp Stops	Standard
1	Flexible Easy-Off Tarp Stop	Add/Ea.
2	6" Offset Easy-Off Tarp Stop	Add/Ea.
3	6" Offset Flexible Easy-Off Tarp Stop	Add/Ea.
C	BOWS/BRACKETS	
1	Additional Heavy-Duty Bows	Add/Ea.
2	Aluminum Brackets - For Durabow™ (2)	Add/Set
D	END CAPS	
•	Front Heavy-Duty (LR/HR) Bow/Brackets (2)	*Standard
•	Poorboy Rear (LR/HR) Tapered Flap	Standard
1	Fabric Rear Cap	N/C
2	No Poorboy Rear Tapered Flap	Deduct
3	Galvanized Front Cap	Deduct
4	Aluminum Square Front Cap	Add
5	Aluminum Universal (LR) Front Cap	Add
6	Fabric Front Cap	Add
E	RIDGE SUPPORTS	
•	Ridgepole - Not Available for Durabow™ Kit	Standard
F	ROLL RETURN	
•	Stretch Cord Return	Standard
•	Shur-Return™ - HD Bow Kit	Standard
1	Shur-Return™	Add
G	CRANK ARMS	
•	54" Shur-Flex™ Crank Arm	Standard
1	40" Shur-Flex™ Crank Arm	N/C
2	Standard Crank Arm w/33" Extension	Deduct
3	Standard Crank Arm w/80" Extension	Deduct
4	Standard Crank Arm w/96" Extension	Deduct
5	Long Crank Arm w/80" Extension	Deduct
H	RETAINERS	
•	Offset Retainers (4 with Shur-Flex™)	Standard
•	Offset Retainers (2 with Standard Crank)	Standard
1	Offset Pinless Retainers (4)	Add/Set
2	Offset Pinless Retainers (2)	Add/Set
J	TARP OPTIONS	
•	22-Oz. Vinyl Tarp - Choice of Color	**Standard
1	Multicolored Fabric (Per Added Color)	Add
2	Tarp Reinforcements	Add/Ft.
K	OTHER OPTIONS	
1	Standard Tarp Repair Kit	Add
2	Professional Tarp Repair Kit	Add
3	Bow Sock	Add/Ea.
4	Molded Roll Tube Deflectors (2)	Add/Set

*These two (2) bows/brackets function as a front end cap on this system.

**Available colors: black, red, white, royal blue, green, gray, maroon, yellow and grape. Grape and Yellow N/A in 22-Oz. For tan CALL.

NOTE: There is NO deduction in cost if you downgrade to 18-Oz. fabric and NO warranty on the tarp.

END DUMPS

COMPLETE KITS | *Tarps Included*

BOX LENGTH	STD BOWS	HD BOWS	TURNING POINT™	DURABOW™ ALUM BOWS
20'				
21'				
22'				
23'				
24'				
25'				
26'				
27'				
28'				
29'				
30'				
31'				
32'				
33'				
34'				
35'				
36'				
37'				
38'				
39'				
40'				
41'				
42'				
43'				
44'				
45'				
46'				
47'				
48'				

HARDWARE QTY

SIZE	TARP STOPS	STD BOWS	HD BOWS	TURNING POINT™	DURABOW™	ALUM BOWS
20' to 22'	3	4	2	3	4	4
23'	3	4	2	3	5	5
24' to 26'	4	5	2	4	5	5
27' to 30'	5	6	2	5	6	6
31' to 34'	5	7	2	5	7	7
35' to 38'	6	8	3	6	8	8
39' to 43'	6	9	3	6	9	9
44' to 46'	7	10	3	7	10	10
47' to 48'	7	11	4	7	11	11

STANDARD FEATURES AND OPTIONS

A	LATCHPLATES	
•	Aluminum Latchplate	Standard
B	TARP STOPS	
•	Easy-Off Tarp Stops	Standard
1	Flexible Easy-Off Tarp Stop	Add/Ea.
2	6" Offset Easy-Off Tarp Stop	Add/Ea.
3	6" Offset Flexible Easy-Off Tarp Stop	Add/Ea.
C	BOWS/BRACKETS	
1	Turning Point Bows - For Alumatech Trailers	*Add
2	Adjustable Galvanized (LR/HR) Bows	Add/Ea.
3	No Galvanized (LR/HR) Bows	Deduct/Ea.
4	No Heavy-Duty Bows	Deduct/Ea.
5	No Alum Bows	Deduct/Ea.
6	No Durabow™ Bows	Deduct/Ea.
7	Aluminum Brackets - For Durabow™ (2)	Add/Set
D	END CAPS	
•	Fabric (LR/HR) Front/Rear Caps	Standard
1	Combo Caps	N/C
2	Poorboy Rear Tapered Flap	N/C
3	No Rear Cap	Deduct
4	Aluminum Universal (LR) Front Cap	N/C
5	Poorboy Front Tapered Flap	N/C
6	Poorboy Front Radius/Diagonal Fitted Flap	N/C
7	No Front Cap	Deduct
E	RIDGE SUPPORTS	
•	1" Ridge Strap - Std. & Alum. Bow Kit	Standard
•	Ridgepole – HD Bow Kit & TP Bow Kit	Standard
1	Additional 1" or 2" Ridge Strap (39')	Add/Ea.
2	Additional 1" or 2" Ridge Strap (46')	Add/Ea.
3	Additional 1" or 2" Ridge Strap (56')	Add/Ea.
4	No Ridge Strap	Deduct/Ea.
F	ROLL RETURN	
•	Stretch Cord Return	Standard
•	Shur-Return™ - HD Bow Kit	Standard
1	Shur-Return™	Add
G	CRANK ARMS	
•	54" Shur-Flex™ Crank Arm	Standard
1	40" Shur-Flex™ Crank Arm	N/C
2	80" Shur-Flex™ Crank Arm	Add
3	Standard Crank Arm w/80" Extension	Deduct
4	Standard Crank Arm w/96" Extension	Deduct
5	Long Crank Arm w/80" Extension	Deduct
H	RETAINERS	
•	Offset Retainers (4 with Shur-Flex™)	Standard
•	Offset Retainers (2 with Standard Crank)	Standard
1	Offset Pinless Retainers (4)	Add/Set
2	Offset Pinless Retainers (2)	Add/Set
J	TARP OPTIONS	
•	22-Oz. Vinyl Tarp - Choice of Color	**Standard
1	Multicolored Fabric (Per Added Color)	Add
2	Bow Reinforcements (10")	Add
3	Tarp Reinforcements	Add/Ft.
4	Load Hole Flap	Add/Ea.
K	OTHER OPTIONS	
1	Standard Tarp Repair Kit	Add
2	Professional Tarp Repair Kit	Add
3	Bow Sock	Add/Ea.
4	Molded Roll Tube Deflectors (2)	Add/Set

*Turning Point™ bows/brackets are used for 39' Alumatech trailer ONLY.

**Available colors: black, red, white, royal blue, green, gray, maroon, yellow and grape. Grape and Yellow N/A in 22-Oz. For tan CALL.

NOTE: There is NO deduction in cost if you downgrade to 18-Oz. fabric and NO warranty on the tarp.

OPEN-TOP VANS

COMPLETE KITS w/2" ROLL TUBE | *Tarps Included*

BOX LENGTH	SUPER DUTY 18-OZ	SUPER DUTY 22-OZ
28'		
30'		
32'		
34'		
36'		
38'		
40'		
42'		
44'		
46'		
48'		
50'		
52'		
54'		

COMPLETE KITS w/3" ROLL TUBE* | *Tarps Included*

BOX LENGTH	SUPER DUTY 18-OZ	SUPER DUTY 22-OZ
28'		
30'		
32'		
34'		
36'		
38'		
40'		
42'		
44'		
46'		
48'		
50'		
52'		
54'		

*Kits w/3" roll tube for electric kits only.

HARDWARE QTY

SIZE	TARP STOPS	U-CLAMPS	STD BOWS	HD BOWS
28' to 30'	5	10	6	2
31' to 34'	5	10	7	2
35' to 38'	6	14	8	3
39' to 43'	6	14	9	3
44' to 46'	7	16	10	3
47' to 50'	7	16	11	4
51' to 54'	8	18	12	4

STANDARD FEATURES AND OPTIONS

A	**LATCHPLATES**	
•	Aluminum Latchplate	Standard
B	**TARP STOPS**	
•	6" Offset Easy-Off Tarp Stop	Standard
1	6" Offset Flexible Easy-Off Tarp Stop	Add/Ea.
2	6" Offset Belt Flex™ Tarp Stop	Add/Ea.
3	Easy-Off Tarp Stop	Deduct/Ea.
4	Flexible Easy-Off Tarp Stop	Add/Ea.
5	Easy-Off Belt Flex™ Tarp Stop	N/C
C	**BOWS/BRACKETS**	
•	No Bows	Standard
1	Galvanized (Flat/LR) Bows	Add/Ea.
2	Adjustable Galvanized (LR/HR) Bows	Add/Ea.
3	Durabow™ w/Steel Bracket	Add/Ea.
4	Durabow™ w/Aluminum Bracket	Add/Ea.
5	Heavy-Duty (Flat/LR) Bows	Add/Ea.
6	Aluminum Bows	Add/Ea.
D	**END CAPS**	
•	Aluminum Square (Flat) End Caps	Standard
1	Aluminum Square (LR) Rear Cap	Add
2	Galvanized (LR) Rear Cap	N/C
3	Fabric (LR) Rear Cap	Add
4	Poorboy Rear Tapered Flap	N/C
5	No (Flat) Rear Cap	Deduct
6	Aluminum Extra Deep (Flat/LR) Back Cap & Extendable Spline	Add
7	Aluminum Square (LR) Front Cap	Add
8	Aluminum Radius/Diagonal (Flat/LR) Front Cap	Add
9	Aluminum Universal (Flat/LR) Front Cap	Add
10	Galvanized (LR) Front Cap	N/C
11	Fabric (LR) Front Cap	Add
12	Poorboy Front Tapered Flap	N/C
13	Poorboy Front Radius/Diagonal Fitted Flap	Add
14	No (Flat) Front Cap	Deduct
E	**RIDGE SUPPORTS**	
•	No Ridge Strap	Standard
1	1" or 2" Ridge Strap (39')	Add/Ea.
2	1" or 2" Ridge Strap (46')	Add/Ea.
3	1" or 2" Ridge Strap (56')	Add/Ea.
F	**ROLL RETURN**	
•	Shur-Return™	Standard
1	Stretch Cord Return	Deduct
2	Front Cable Return	Add
3	Heavy-Duty Arm Return	Add
G	**CRANK ARMS**	
•	96" Shur-Flex™ Crank Arm	Standard
1	80" Shur-Flex™ Crank Arm	N/C
2	Standard Crank Arm w/80" Extension	Deduct
3	Standard Crank Arm w/96" Extension	Deduct
4	Long Crank Arm w/80" Extension	Deduct
H	**RETAINERS**	
•	Offset Retainers (4 with Shur-Flex™)	Standard
•	Offset Retainers (2 with Standard Crank)	Standard
1	Offset Pinless Retainers (4)	Add/Set
2	Offset Pinless Retainers (2)	Add/Set
J	**TARP OPTIONS**	
•	18-Oz Vinyl Tarp - Choice of Color	*Standard
•	22-Oz Vinyl Tarp - Choice of Color	*Add
1	Multicolored Fabric (Per Added Color)	Add
2	Mesh Insert 72" x 26'	**Add/Ea.
3	Tarp Reinforcements	Add/Ft.
K	**OTHER OPTIONS**	
1	Rear Cable Return - Used w/Metal Caps	Add
2	Standard Tarp Repair Kit	Add
3	Professional Tarp Repair Kit	Add
4	Bow Sock	Add/Ea.
5	Molded Roll Tube Deflectors (2)	Add/Set

*Available colors: black, red, white, royal blue, green, gray, maroon, yellow and grape. Grape and Yellow N/A in 22-Oz. For tan CALL.

**Inserts smaller than standard size will be priced the same. If larger than standard, a special quote will be needed.

COMPLETE KITS w/2" ROLL TUBE | *Tarps Included*

BOX LENGTH	SUPER DUTY 18-OZ	MESH
38'		
40'		
42'		
44'		
46'		
48'		
50'		
52'		
54'		

COMPLETE KITS w/3" ROLL TUBE* | *Tarps Included*

BOX LENGTH	SUPER DUTY 18-OZ	MESH
38'		
40'		
42'		
44'		
46'		
48'		
50'		
52'		
54'		

*Kits w/3" roll tube for electric kits only.

HARDWARE QTY

SIZE	TARP STOPS	U-CLAMPS	STD BOWS	HD BOWS
38'	6	14	8	3
39' to 43'	6	14	9	3
44' to 46'	7	16	10	3
47' to 50'	7	16	11	4
51' to 54'	8	18	12	4

STANDARD FEATURES AND OPTIONS

A	**LATCHPLATES**	
•	Aluminum Latchplate	Standard
B	**TARP STOPS**	
•	6" Offset Belt Flex™ Tarp Stop	Standard
1	6" Offset Flexible Easy-Off Tarp Stop	Deduct/Ea.
2	6" Offset Easy-Off Tarp Stop	Deduct/Ea.
3	Easy-Off Belt Flex™ Tarp Stop	Deduct/Ea.
4	Flexible Easy-Off Tarp Stop	Deduct/Ea.
5	Easy-Off Tarp Stop	Deduct/Ea.
C	**BOWS/BRACKETS**	
•	No Bows	Standard
1	Galvanized (Flat/LR) Bows	Add/Ea.
2	Adjustable Galvanized (LR/HR) Bows	Add/Ea.
3	Heavy-Duty (Flat/LR) Bows	Add/Ea.
D	**END CAPS**	
•	Aluminum Radius/Diagonal (Flat) Front Cap	Standard
•	Aluminum Square (Flat) Rear Cap	Standard
1	Aluminum Square (LR) Rear Cap	Add
2	Galvanized (LR) Rear Cap	N/C
3	Poorboy Rear Tapered Flap	N/C
4	No (Flat) Rear Cap	Deduct
5	Aluminum Square (LR) Front Cap	Deduct
6	Aluminum Radius/Diagonal (LR) Front Cap	N/C
7	Aluminum Universal (Flat/LR) Front Cap	Add
8	Galvanized (LR) Front Cap	Deduct
9	Poorboy Front Tapered Flap	Deduct
10	No (Flat) Front Cap	Deduct
E	**RIDGE SUPPORTS**	
•	No Ridge Strap	Standard
1	1" or 2" Ridge Strap (39')	Add/Ea.
2	1" or 2" Ridge Strap (46')	Add/Ea.
3	1" or 2" Ridge Strap (56')	Add/Ea.
F	**ROLL RETURN**	
•	Shur-Return™	Standard
1	Stretch Cord Return	Deduct
2	Front Cable Return	Add
3	Heavy-Duty Arm Return	Add
G	**CRANK ARMS**	
•	96" Shur-Flex™ Crank Arm	Standard
1	80" Shur-Flex™ Crank Arm	N/C
2	Standard Crank Arm w/80" Extension	Deduct
3	Standard Crank Arm w/96" Extension	Deduct
4	Long Crank Arm w/80" Extension	Deduct
H	**RETAINERS**	
•	Offset Retainers (4 with Shur-Flex™)	Standard
•	Offset Retainers (2 with Standard Crank)	Standard
1	Offset Pinless Retainers (4)	Add/Set
2	Offset Pinless Retainers (2)	Add/Set
J	**TARP OPTIONS**	
•	18-Oz Vinyl Tarp - Choice of Color	*Standard
•	Mesh Tarp	**Add
1	Multicolored Fabric (Per Added Color)	Add
2	Mesh Insert 72" x 26'	***Add/Ea.
3	Tarp Reinforcements	Add/Ft.
K	**OTHER OPTIONS**	
1	Rear Cable Return - Used w/Metal Caps	Add
2	Standard Tarp Repair Kit	Add
3	Professional Tarp Repair Kit	Add
4	Bow Sock	Add/Ea.
5	Molded Roll Tube Deflectors (2)	Add/Set

*Available colors: black, red, white, royal blue, green, gray, maroon, yellow and grape. Grape and Yellow N/A in 22-Oz. For tan CALL.

**Available in black only.

***Inserts smaller than standard size will be priced the same. If larger than standard, a special quote will be needed.

TARP PRICING DIRECTIONS

Pricing given is for black fabric ONLY; add tarp options for a final price. For all other colors, add tarp price and tarp options, find the subtotal and then add a 15% upcharge. [TARP + OPTIONS = SUBTOTAL x 15% = UPCHARGE] Additional available colors: black, red, white, royal blue, green, gray, maroon, yellow and grape. Grape and Yellow N/A in 22-Oz.. For tan CALL.
Replacement tarp pricing for 2" & 3" roll tubes are the same price. The roll tube pocket for a 2" roll tube is 5" and the pocket for a 3" roll tube is 7".

SUPER DUTY/MESH: Finished tarp width is opening width PLUS 27".

BOX LENGTH	(BOX WIDTH) FINISHED TARP WIDTH							
	18-OZ TARP		22-OZ TARP		22-OZ TARP W/RP POCKET		MESH	
	(96") / 112"	(102") / 118"	(96") / 112"	(102") / 118"	(96") / 112"	(102") / 118"	(96") / 112"	(102") / 118"
10'								
11'								
12'								
13'								
14'								
15'								
16'								
17'								
18'								
19'								
20'								
21'								
22'								
23'								
24'								
25'								
26'								
27'								
28'								
29'								
30'								
31'								
32'								
33'								
34'								
35'								
36'								
37'								
38'								
39'								
40'								
41'								
42'								
43'								
44'								
45'								
46'								
47'								
48'								
49'								
50'								
51'								
52'								
53'								
54'								

18-OZ TARP OPTIONS	
Load Hole Flap	Add/Ea.
Multicolored Fabric *	Add
Tarp Reinforcements	Add/Ft.
Poorboy Rear Tapered Flap	Add
Poorboy Front Tapered Flap	Add
Poorboy Diag./Radius Fit. Flap	Add
Additional 6" in Width	Add/Ft.

*Additional cost per added color.

22-OZ/MESH TARP OPTIONS	
Load Hole Flap	Add/Ea.
Multicolored Fabric *	Add
Tarp Reinforcements	Add/Ft.
Poorboy Rear Tapered Flap	Add
Poorboy Front Tapered Flap	Add
Poorboy Diag./Radius Fit. Flap	Add
Additional 6" in Width	Add/Ft.

*Additional cost per added color.

U-CLAMPS	
2" ROLL TUBE	
1115966	U-Clamp Kit 2" - (3)
1118643	U-Clamp Kit 2" - (8)
1118644	U-Clamp Kit 2" - (10)
1118663	U-Clamp Kit 2" - (14)
3" ROLL TUBE	
1126790	U-Clamp Kit 3" - (3)
1126791	U-Clamp Kit 3" - (8)
1126792	U-Clamp Kit 3" - (10)
1126793	U-Clamp Kit 3" - (14)

NOTE: Includes self-tapping screws.

SIZE	U-CLAMPS
10' to 18'	8
19' to 34'	10
35' to 43'	14
44' to 50'	16
51' to 54'	18

BOW COVERS

BOW SOCK

- Keeps Bows from Pitting
- Helps Extend the Life of Bows

BOWS/BRACKETS

ADJUSTABLE

- For Slanted with Angle Extensions
- Adjusts Bows for Better Tarp Tension

ALUMINUM

- Solid Aluminum Bow Prevents Chemical Reaction from Occurring if Steel Bows/ Brackets are Used on Aluminum Trailer

DURABOW™

- Molded Resin Bow Supports Tarp but has Enough Give to be Left on Loading

FLAT

- Flattened Version of Heavy-Duty Bow
- No-Rise Design for Less Loader Interference

GALVANIZED STEEL

- Galvanized Bracket Lets Bows Flex and Allows for Box Expansion

HEAVY-DUTY BOW

- Permits Bow Spacing up to 12' Apart
- In Low-Rise/High-Rise

TURNING POINT™ BOW

- Angled Bracket Allows Bow to Move Freely
- No Binding Over Loads

CRANK ARMS

STRAIGHT

- Provides 4-Position Length Adjustment
- Mounts Vertically or Horizontally

SHUR-FLEX™

- Pivots on a Knuckle, Folds for Storage
- Stores on Side to Accommodate Rear Doors

CRANK RETAINERS

OFFSET PINLESS RETAINER

- Provides Added Security
- Eliminates Pin-and-Cable Hassles
- Use on Either Side of the Trailer

PINLESS RETAINER

- Secure Crank Arm to Trailer without Pins or Cables

CRANK ASSEMBLIES

EXTENDABLE SPLINE ASSEMBLY

- A More Corrosive-Resistant Version of Galvanized Telescoping/Indexing Crank

END CAPS

ALUMINUM

- Sharper Match for Aluminum Trailers
- High-Rise Options Provide more Space

COMBO CAP

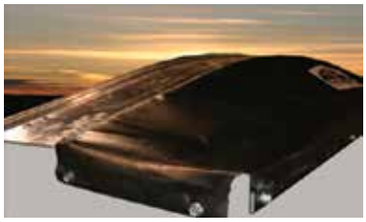

- Arched Fixed Aluminum Surface for an Improved Seal and Less Wear on Fabric

END CAPS CONT.

FABRIC

- Watertight Seal
- Flexes to Prevent Loading Damage
- Tarp must Overlap Cap by 9"

FABRIC FLAP/POORBOY TAIL

- Increased Loading Space
- Cargo Protection
- Poorboy Tail is Built Right into the Tarp

GALVANIZED STEEL

- Weld-Free Construction - Corrosion Resistance
- Front Guard Reduces Whip

UNIVERSAL ALUMINUM

- Used for Trailers with Hard-to-Fit Fronts
- Flat 22" Extension gets Cut and Shaped at Install

UNIVERSAL FLAT

- Flat 22" Aluminum Extension Helps Minimize Height of the Trailer for Hard-to-Fit Models

LATCHPLATES

ALUMINUM

- Lightweight Galvanized Latchplate
- Sharp Appearance to Match Trailer

MOTORS

DIRECT-DRIVE MOTOR 900 WATT - 12V

- Available Motor P/N: 1704878
- 3-Year Warranty

RETURNS

CABLE

- Uses a Non-Stretch Cable and Steel Tension Spring
- Installs on Front or Rear of Trailer

SHUR-RETURN™

- Non-Stretch Solid Braid Rope with Heavy-Duty Steel Tension Spring
- Works Well in Cold Weather

STRETCH CORD

- Helps Guide Front of Roll Tube Across End Cap
- A Protective Cover Reduces Fraying

RIDGE SUPPORTS

RIDGE STRAP

- Stretch-Resistant Webbing Keeps Tarp from Sagging Between Bows
- 1" and 2" Sizes

ROLLAWAY RIDGEPOLE

- Steel Pole with Protective End Caps
- Slides into Pocket then Rolls into Protective Tarp

ROLL TUBE DEFLECTORS

MOLDED DEFLECTOR

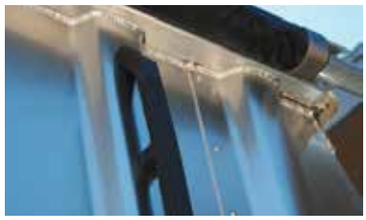

- Reduces Dings and Scratches on Carts and Trailers
- In High-Impact Plastic, Black, or Gray

TARP OPTIONS

LOAD HOLE FLAP

- Velcro® with Buckle Fastener Facilitates All-Weather Loading/Dust Control
- Not Waterproof

MULTI-COLORED FABRIC

- Custom Color Creates High Visibility for Instant Recognition
- Acts as a Deterrent to Theft

EASY-OFF

- Keeps Tarp from Getting Hung Up and Rubbing

FLEXIBLE EASY-OFF

- Bends in Subzero Cold
- Impact and Abrasion Resistant with Safety Plates

EASY-OFF BELT FLEX

- Belted Design Flexes in Low-Clearance Situations to Keep from Damaging Tarp Stops

6" OFFSET EASY-OFF

- Taller with Patented Curved Tip
- Offset Design Gives Maximum Loading Space

6" OFFSET FLEXIBLE EASY-OFF

- All Advantages of Regular 6" Offset Easy-Off Stops
- Bends in Subzero Cold

6" OFFSET EASY-OFF BELT FLEX

- Flexible Belted Design in Off-Set Style
- Holds Tarp Off Side of Top Rail for More Clearance

TURNING POINT BOW

DURABLE SWIVEL

Each bow is connected to the ridgepole at the center of the bow with a 1/6 solid steel pivot pin creating durable swivel points for the bows to operate.

HIGH-CLEARANCE BOWS

The design of the Turning Point™ Bow uses angled pivot brackets which allow the bows to swing not only over but upward. This allows you to clear heaped loads as they open and close more easily.

EASY RELEASE AND CAPTURE

Spring-loaded locking pins make locking and unlocking the bows as easy as pulling a rope. Pull the rope to release the pin, allowing you to pull the bows to the side in the open position. When done loading, simply pull the bows across the load and let the locking pins capture the bows and lock them into position.

GATORSHIELD® TOUGH

Bows and ridgepoles have been constructed from strong Gatorshield® galvanized steel tubing, creating a corrosive-resistant tarp system.

ELECTRIC TURNING POINT BOW

KEY FEATURES

- Electric Cut-Off Switch
- Automatic Overload Slip Clutch
- Locking Skid Plate
- Bow Actuator
- Easy Electric-to-Manual Conversion
- ShurLink PRO™ and ShurLink EZR™ Remote Systems Capabilities, Available Upon Request, See Accessories Section for Details

Bows move as one, swinging up and out of the way for wide-open loading. The operator can remain safely in the cab while operating the system with a rocker switch or our ShurLink PRO™ and ShurLink EZR™ remotes. (No positional feedback with ShurLink PRO™.)

The center pivoting ridgepole holds the tarp without sagging, so you need fewer bows. The locking system provides secure support during transport and serves as a skid plate when the bows swing closed.

The electronic actuator is designed for long life in the harshest conditions, operating in temperatures ranging from -86–140° F. Integrated brakes lock out movement, a slip clutch automatically protects the actuator from overload and a cut-off switch prevents operation unless the roll tarp is completely open.

Table of Contents

Replacement Parts

MORE PRODUCT INFORMATION

Want to learn more? Simply scan to explore further details about Turning Point™ Bow and Electric Turning Point™ Bow features.

MANUAL CONVERSION KIT | Converting Non-TP to Manual TP Bow System

	84" TO 102" WIDTH
BOX LENGTH	10' to 16'
	17' to 18'
	19' to 24'
	25' to 26'
	27' to 32'
	33' to 34'
	35' to 40'
	41' to 43'
	44' to 48'

HARDWARE QTY

	SIZE	BOWS	RIDGEPOLE
BOX LENGTH	10' to 16'	3	16'
	17' to 18'	4	20'
	19' to 24'	4	24'
	25' to 26'	5	32'
	27' to 32'	5	32'
	33' to 34'	6	36'
	35' to 40'	6	40'
	41' to 43'	7	44'
	44' to 48'	7	48'

ROCKER CONVERSION KIT | Converting Non-TP to Electric TP Bow System

	84" TO 102" WIDTH	30' WIRE	50' WIRE	75' WIRE	100' WIRE
BOX LENGTH	10' to 16'				
	17' to 18'				
	19' to 24'				
	25' to 26'				
	27' to 32'				
	33' to 34'				
	35' to 40'				
	41' to 43'				
	44' to 48'				

ROCKER UPGRADE KIT | Converting Manual TP to Electric TP Bow System

KIT NAME	WIRE LENGTH
Electric Turning Point™ Bow System	*30'
Electric Turning Point™ Bow System	*50'
Electric Turning Point™ Bow System	*75'
Electric Turning Point™ Bow System	*100'

*Includes front bow to attach actuator. No Ridgepole or other bows with this upgrade. Must have 6" offset tarp stops to upgrade to electric.

NOTE: For wireless options CALL. Available in ShurLink EZR™ and ShurLink PRO™. System will not give positional feedback; Express Mode will NOT be available but will work with other SMART applications.

OPTIONS AND FEATURES

ELECTRIC OPERATION

MOTOR REVERSING SOLENOID
P/N 1703845

LINEAR ACTUATOR
P/N 1704130

SOLENOID COVER
P/N 1703896

SHURLINK EZR™ REMOTE
P/N 1131576

SHURLINK PRO™ REMOTE
P/N 1131575

SHURLINK RECEIVER - NON EXPRESS
P/N 1132100

4500 SERIES HD

KEY FEATURES

- Spiral Spring
- HD Front/Rear Aluminum Torsion Arms with Flex-Elbow and Boot
- HD Mounting Bracket
- Dual-Pivot Motor Mount
- Custom Motor Shroud
- Sealed Control Box
- SMARTwire™ Sealed Harness
- ShurLink PRO™ and ShurLink EZR™ Remote System Capabilities, See Accessories Section in Catalog for Details

The 4500 Series HD features a powerful USA-made motor with all-metal gearbox and an incredibly reliable magnetic brake. Heavy-duty torsion arms are equipped with patented durable elbows for flexibility to move smoothly over loads.

The 4500 Series HD's motor produces optimal rather than increased torque (which can do harm to your tarp system). No electrical energy is used to actuate the brake, so there are no electrical connections to misfire. A patented pivoting motor mount allows for any misalignment of the roll tube without stress to the system.

The heavy-duty arms are backed with a lifetime warranty. They come preassembled with a super-sturdy mounting bracket. No bracket plate needed in most installs. The roller bearing style rear arm bracket has a low-friction design that won't wear out. Both arms are inset to prevent obstruction of clearance lights.

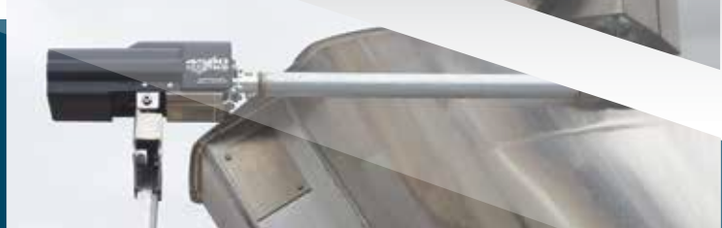

Table of Contents

Replacement Parts

MORE PRODUCT INFORMATION
Want to learn more? Simply scan to explore further details about 4500 Series HD features.

MODE OF OPERATION | ROCKER

KIT NAME	ARM TYPE	FRONT	REAR DOOR	REAR RETURN
4500 Series HD	Double Arm	Vertical	Top Hinge	4-Spiral Torsion Springs
4500 Series HD	Double Arm	Vertical	Side Hinge	4-Spiral Torsion Springs
4500 Series HD	Double Arm	Sloped	Top Hinge	4-Spiral Torsion Springs
4500 Series HD	Double Arm	Sloped	Side Hinge	4-Spiral Torsion Springs
4500 Series HD	Single Arm	Vertical	N/A	*Shur-Strap™
4500 Series HD	Single Arm	Sloped	N/A	*Shur-Strap™

MODE OF OPERATION | SHURLINK EZR™

KIT NAME	ARM TYPE	FRONT	REAR DOOR	REAR RETURN
4500 Series HD	Double Arm	Vertical	Top Hinge	4-Spiral Torsion Springs
4500 Series HD	Double Arm	Vertical	Side Hinge	4-Spiral Torsion Springs
4500 Series HD	Double Arm	Sloped	Top Hinge	4-Spiral Torsion Springs
4500 Series HD	Double Arm	Sloped	Side Hinge	4-Spiral Torsion Springs
4500 Series HD	Single Arm	Vertical	N/A	*Shur-Strap™
4500 Series HD	Single Arm	Sloped	N/A	*Shur-Strap™

MODE OF OPERATION | SHURLINK PRO™

KIT NAME	ARM TYPE	FRONT	REAR DOOR	REAR RETURN
4500 Series HD	Double Arm	Vertical	Top Hinge	4-Spiral Torsion Springs
4500 Series HD	Double Arm	Vertical	Side Hinge	4-Spiral Torsion Springs
4500 Series HD	Double Arm	Sloped	Top Hinge	4-Spiral Torsion Springs
4500 Series HD	Double Arm	Sloped	Side Hinge	4-Spiral Torsion Springs
4500 Series HD	Single Arm	Vertical	N/A	*Shur-Strap™
4500 Series HD	Single Arm	Sloped	N/A	*Shur-Strap™

*Includes Shur-Strap™ return. Choosing heavy-duty Shur-Return™ or shock cord instead will NOT permit manual override.

NOTE: Easy-Off 6" offset tarp stops are needed for top-hinge and side-hinge 4500 Series HD kits. Also, if aluminum cap is installed on trailer, rear cap must be at least 20-1/4" deep for system to work.

NOTE: End Dump kits come with 75' of 6 Ga. wire and attach to a rear door with a max hinge depth of 17".

STANDARD FEATURES AND OPTIONS

A	**RETURNS**	
•	4-Spiral Torsion Springs per Arm	Standard
•	Shur-Strap™ - Single Arm Kits	Standard
1	Heavy-Duty Shur-Return™	*N/C
2	Shock Cord Roll Return	*N/C
B	**MOUNTING BRACKETS**	
•	Heavy-Duty Aluminum Brackets	Standard
C	**TORSION ARMS**	
•	Heavy-Duty Aluminum Arms	Standard
D	**MOTOR COVERS**	
•	Black Motor Cover	Standard
1	Chrome Motor Cover	Add
E	**WIRING**	
•	Cab Wiring Kit - 6 Ga. x 30' Wire	Standard
•	Trailer Wiring Kit - 6 Ga. w/SMARTwire™	Standard
1	Additional 25' of (4Ga) SMARTwire™ (100' Total)	**Add
F	**SPLINE CAPABILITY**	
•	Gate Flex™ - Double Arm Kits	Standard
•	Shur-Strap™ - Single Arm Kits (Exposed Spline)	Standard
1	Manual Override - Needed w/Hinge Depth Over 2"	Add
G	**TARP STOP UPRIGHTS**	
•	Existing Tarp Stop Uprights on Trailer	***Standard
1	Easy-Off Aluminum 6" Offset Tarp Stop Upright	Add/Ea
2	Easy-Off Flexible 6" Offset Tarp Stop Upright	Add/Ea
H	**OTHER OPTIONS**	
1	Offset Crank Retainers (2 are required)	****Add/Ea
2	Extra ShurLink™ EZR Remote	Add
3	Extra ShurLink™ PRO Remote	Add
	ACCESSORIES	
	1131664 ShurLink™ LiteALL™-2 Light	Add/Ea

*Optional return for single-arm series.
**Needed for framed trailers 34' or longer.
***If existing tarp stop is a standard easy-off, upgrading to a 6" offset will allow tarp to roll out past top rail. Allowing tarp to not interfere with swinging door.
****Used to store crank arm.

MODE OF OPERATION | ROCKER

KIT NAME	ARM TYPE	FRONT	REAR DOOR	REAR RETURN	ROLL TUBE
4500 Series HD	Double Arm	Vertical	Top Hinge	4-Spiral Torsion Springs	2"
4500 Series HD	Double Arm	Vertical	Side Hinge	4-Spiral Torsion Springs	2"
4500 Series HD	Single Arm	Vertical	N/A	*Shur-Strap™	2"
4500 Series HD	Double Arm	Vertical	Top Hinge	4-Spiral Torsion Springs	3"
4500 Series HD	Double Arm	Vertical	Side Hinge	4-Spiral Torsion Springs	3"
4500 Series HD	Single Arm	Vertical	N/A	*Shur-Strap™	3"

MODE OF OPERATION | SHURLINK EZR™

KIT NAME	ARM TYPE	FRONT	REAR DOOR	REAR RETURN	ROLL TUBE
4500 Series HD	Double Arm	Vertical	Top Hinge	4-Spiral Torsion Springs	2"
4500 Series HD	Double Arm	Vertical	Side Hinge	4-Spiral Torsion Springs	2"
4500 Series HD	Single Arm	Vertical	N/A	*Shur-Strap™	2"
4500 Series HD	Double Arm	Vertical	Top Hinge	4-Spiral Torsion Springs	3"
4500 Series HD	Double Arm	Vertical	Side Hinge	4-Spiral Torsion Springs	3"
4500 Series HD	Single Arm	Vertical	N/A	*Shur-Strap™	3"

MODE OF OPERATION | SHURLINK PRO™

KIT NAME	ARM TYPE	FRONT	REAR DOOR	REAR RETURN	ROLL TUBE
4500 Series HD	Double Arm	Vertical	Top Hinge	4-Spiral Torsion Springs	2"
4500 Series HD	Double Arm	Vertical	Side Hinge	4-Spiral Torsion Springs	2"
4500 Series HD	Single Arm	Vertical	N/A	*Shur-Strap™	2"
4500 Series HD	Double Arm	Vertical	Top Hinge	4-Spiral Torsion Springs	3"
4500 Series HD	Double Arm	Vertical	Side Hinge	4-Spiral Torsion Springs	3"
4500 Series HD	Single Arm	Vertical	N/A	*Shur-Strap™	3"

*Includes Shur-Strap™ return. Choosing heavy-duty Shur-Return™ or shock cord instead will NOT permit manual override, while heavy-duty cable return will.

CONVERSION COMPONENTS

18-OZ TARP OPTIONS	P/N
Alum Roll Tube - 3" x 12'	1118639
Alum Roll Tube - 3" x 16'	1704439
Alum Roll Tube - 3" x 20'	1704398
Alum Roll Tube - 3" x 24'	1704236
Alum Splice Tube - 3"	1704863
Manual Crank Kit - 3"	1122879

STANDARD FEATURES AND OPTIONS

A	RETURNS	
•	4-Spiral Torsion Springs per Arm	Standard
•	Shur-Strap™ - Single Arm Kits	Standard
2	Heavy-Duty Shur-Return™	*N/C
3	Heavy-Duty Cable Return	*N/C
B	Shock Cord Roll Return	N/C
•	MOUNTING BRACKETS	
C	Heavy-Duty Aluminum Brackets	Standard
•	TORSION ARMS	
D	Heavy-Duty Aluminum Arms	Standard
•	MOTOR COVERS	
1	Black Motor Cover	Standard
E	Chrome Motor Cover	Add
•	WIRING	
•	Cab Wiring Kit - 6 Ga. x 30' Wire	Standard
1	Trailer Wiring Kit - 6 Ga. w/SMARTwire™	**Standard
F	SPLINE CAPABILITY	
•	Gate Flex™ - Double Arm Kits	Standard
•	Shur-Strap™ - Single Arm Kits	Standard
1	Manual Override - Needed w/Hinge Depth Over 2"	Add
G	OTHER OPTIONS	
•	Offset Crank Retainers (2 are required)	***Add/Ea
1	Extra ShurLink™ EZR Remote	Add
2	Extra ShurLink™ PRO Remote	Add
H	ACCESSORIES	
1	1131664 ShurLink™ LiteALL™-2 Light	****Add/Ea

*Returns should be chosen according to trailer configuration.
**Exposed Spline.
***Used to store crank arm.

ELECTRIC OPERATION

MOTOR REVERSING SOLENOID
P/N 1703845

SOLENOID COVER
P/N 1703896

SHURLINK EZR™ REMOTE
P/N 1131576

SHURLINK PRO™ REMOTE
P/N 1131575

SHURLINK RECEIVERS
SEE REPLACEMENT PARTS FOR P/N

MOTORS

4500 HD MOTOR
P/N 1120967

SPRINGS

FLAT COIL SPRING
P/N 1111027

APEX

TIGHT SPACING

In situations where operators have limited spacing between the back of the cab and the front of the trailer, tight turns can damage automatic tarp system components. The APEX™ system's low-profile electric motor allows use of the system on trailers when other covering systems may not be a viable option.

CHALLENGING REAR DOOR HINGES

Unique two-knuckle rear arm (patent pending) allows APEX™ to operate effectively on trailers where rear door top hinges are located as much as 10" forward from the rear of the trailer. Forward-mounted rear hinges render most other tarp systems' rear arms unusable.

SUPERIOR MOTOR AND CIRCUIT PROTECTION

APEX™ offers "Express Mode" functionality when used with capable models of Shur-Co's ShurLink™ remote controls, which provides automatic, one-push covering and uncovering without current spikes.

RETROFIT-ABLE

APEX™ is compatible with most brands of roll tarp systems with flat caps. Owners of manual side to side tarp systems interested in converting to electric OR those unsatisfied with their current electric tarp systems can upgrade by retrofitting their trailer with the APEX™.

KEY FEATURES

- Easily Covers Chip/Refuse Loads 24₆ Above the Trailer Top Rail
- Fits Trailers with Reduced Spacing Between the Tractor and the Trailer
- Superior Motor & Circuit Protection
- Retrofit-Able to Trailers Pre-Installed Tarp Systems

Table of Contents

Replacement Parts

MORE PRODUCT INFORMATION

Want to learn more? Simply scan to explore further details about APEX™ features.

COMPLETE KITS

KIT NAME	ROCKER	ROCKER GATEFLEX™	EZR™	EZR™ GATEFLEX™	PRO™	PRO GATEFLEX™
APEX™ - Stand. Roll	1810369	1810371	1811700	1811704	1811701	1811705
APEX™ - Rev. Roll	1810370	1810372	1811702	1811706	1811703	1811707

NOTE: See ShurLink™ accessories page for ShurLink EZR™ and ShurLink PRO™ comparison.

PIPE KITS - LONG PIPE			P/N
44' - 47'	48' of Pipe w/Splices and 22 U-Clamps & Screws	Add	1810392
47' - 51'	52' of Pipe w/Splices and 22 U-Clamps & Screws	Add	1810393
51' - 53'	56' of Pipe w/Splices and 22 U-Clamps & Screws	Add	1810394

PIPE KITS - SHORT PIPE			P/N
44' - 47'	48' of Pipe w/Splices and 22 U-Clamps & Screws	Add	1811750
47' - 51'	52' of Pipe w/Splices and 22 U-Clamps & Screws	Add	1811751
51' - 53'	56' of Pipe w/Splices and 22 U-Clamps & Screws	Add	1811752

OPTIONS AND FEATURES

ELECTRIC OPERATION

MOTOR REVERSING SOLENOID
P/N 1703845

SOLENOID COVER
P/N 1703896

SHURLINK EZR™ REMOTE
P/N 1131576

SHURLINK PRO™ REMOTE
P/N 1131575

SHURLINK RECEIVER - EXPRESS
P/N 1131614

MOTORS

IRONSIDE2™ | APEX™ MOTOR
P/N 1127091

SPRINGS

7.5-COIL TORSION SPRING
P/N 1705828 - BLACK - LEFT
P/N 1705829 - RED - RIGHT

BELT 'N RATCHET

HOLD-DOWNS

The 2" hold-downs secure the tarp tube for uniform tension across the tarp and make tension adjustments quick and easy. These can be ordered as strap tie-downs or as ratchets with optional quick-release straps.

3" OFFSET EASY-OFF TARP STOP

Designed for maximum loading space. The self-cleaning design prevents buildup around the fixed tube. Permits fast, easy tarp removal with minimum tools.

6" OFFSET FLEXIBLE EASY-OFF TARP STOP

Bends even in subzero cold. Impact and abrasion resistant with embedded safety plates for added durability. Designed for maximum loading space.

VINYL TARP

Made of a solid vinyl-coated fabric for a more durable and longer tarp life. All seams are heat-welded to provide an added moisture barrier. Built in UV inhibitor resist fading. Available in 18-oz. and 22-oz. material.

MESH TARP

Made of a durable lightweight fabric this option offers good air circulation in addition to secure containment. Seams are heat-welded for added durability.

KEY FEATURES

- Aluminum Front and Rear End Caps
- 2" Ratchet Hold Down
- Easy-Off Tarp Stops
- Rope Return
- Square Key Crank Arm

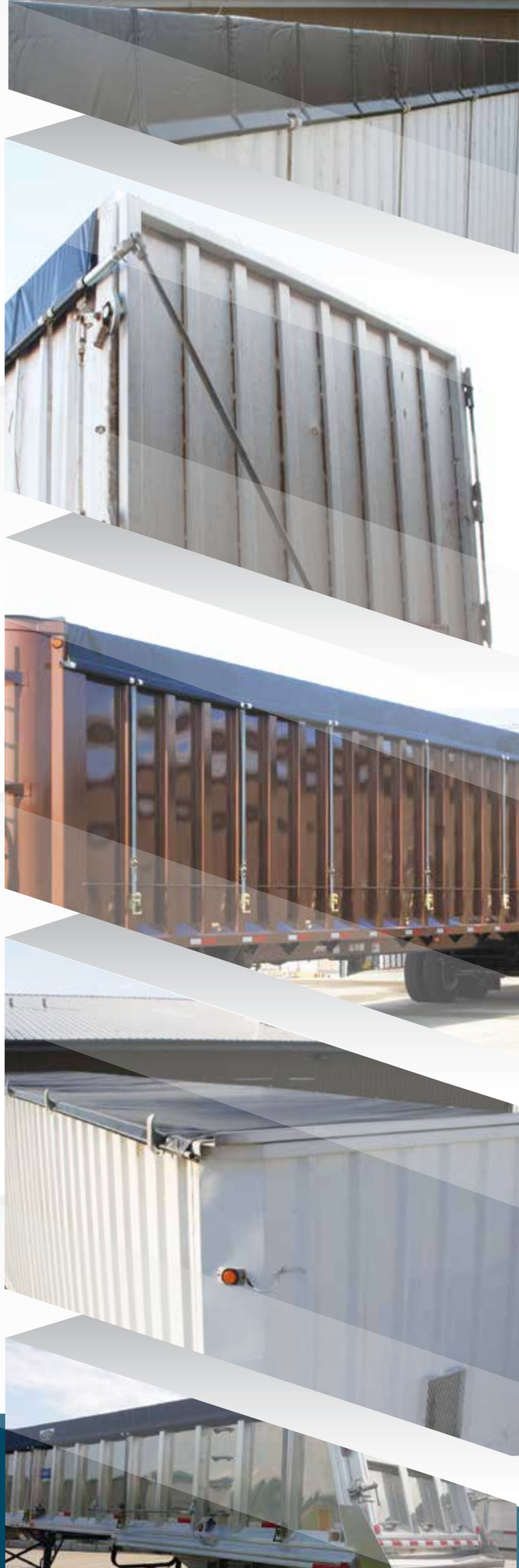

Table of Contents

Replacement Parts

MORE PRODUCT INFORMATION

Want to learn more? Simply scan to explore further details about Belt 'N Ratchet features.

BELLY DUMPS

COMPLETE KITS | *Tarps Included*

BOX LENGTH	HD BOWS	DURABOW™
10'		
11'		
12'		
13'		
14'		
15'		
16'		
17'		
18'		
19'		
20'		
21'		
22'		
23'		
24'		

HARDWARE QTY

SIZE	TARP STOPS	RATCHETS	HD BOWS	DURABOW™
10' to 14'	3	3	0	2
15' to 18'	3	3	1	3
19' to 22'	4	4	1	4
23' to 24'	4	4	1	5

STANDARD FEATURES AND OPTIONS

A	**HOLD-DOWNS**	
•	9' Belt w/2" Ratchet Hold Down	Standard
1	Strap Hold-Down w/Hooks	Add/Ea.
2	Cable Hold-Down	Add/Ea.
B	**TARP STOPS**	
•	Easy-Off Tarp Stops - Durabow™ Kit	Standard
•	6" Offset Flex. Easy-Off Tarp Stop - HD Bow Kit	Standard
1	Flexible Easy-Off Tarp Stop	Add/Ea.
2	6" Offset Easy-Off Tarp Stop	Add/Ea.
C	**BOWS/BRACKETS**	
1	Additional Heavy-Duty Bows	Add/Ea.
2	Aluminum Brackets - For Durabow™ (2)	Add/Set
D	**END CAPS**	
•	Aluminum (LR/HR) End Caps	Standard
1	Galvanized (LR/HR) Rear Cap	Deduct
2	Fabric (LR/HR) Rear Cap	Add
3	No Rear Cap	Deduct
4	Galvanized (LR/HR) Front Cap	Deduct
5	Fabric (LR/HR) Front Cap	Add
6	No Front Cap	Deduct
E	**RIDGE SUPPORTS**	
•	Ridgepole - Not Available on Durabow™ Kit	Standard
F	**ROLL RETURN**	
•	Rope Return	Standard
G	**CRANK ARMS**	
•	Crank Arm w/Extension/Square Key	Standard
1	Standard Square Key Crank Arm	Deduct
2	Leave-On Crank Option	*Add
H	**RETAINERS**	
•	Offset Standard Retainer (2)	Standard
1	Offset Pinless Retainer (2)	Add/Set
J	**TARP OPTIONS**	
•	22-Oz Vinyl Tarp - Choice of Color	**Standard
1	Multicolored Fabric (Per Added Color)	Add
2	Tarp Reinforcements	Add/Ft.
K	**OTHER OPTIONS**	
1	Standard Tarp Repair Kit	Add
2	Professional Tarp Repair Kit	Add
3	Bow Sock	Add/Ea.
4	Molded Roll Tube Deflectors (2)	Add/Set

*Includes stretch cord return and wire lock pin.

**Available colors: black, red, white, royal blue, green, gray, maroon, yellow and grape. Grape and yellow NA in 22-Oz. For tan CALL.

NOTE: There is NO deduction in cost if you downgrade to 18-oz. fabric and NO warranty on the tarp.

DUMP BODIES

COMPLETE KITS | *Tarps Included*

BOX LENGTH	HD BOWS	DURABOW™	TURNING POINT™
10'			
11'			
12'			
13'			
14'			
15'			
16'			
17'			
18'			
19'			
20'			
21'			
22'			
23'			
24'			

HARDWARE QTY

SIZE	TARP STOPS	RATCHETS	HD BOWS	DURABOW™	TURNING POINT™
10' to 14'	3	3	0	2	3
15' to 18'	3	3	1	3	3
19' to 22'	4	4	1	4	4
23' to 24'	4	4	1	5	4

STANDARD FEATURES AND OPTIONS

A	HOLD-DOWNS	
•	5' Belt w/2" Ratchet Hold Down	Standard
1	Strap Hold-Down w/Hooks	Add/Ea.
2	Cable Hold-Down	Add/Ea.
B	TARP STOPS	
•	Easy-Off Tarp Stops	Standard
1	Flexible Easy-Off Tarp Stop	Add/Ea.
2	6" Offset Easy-Off Tarp Stop	Add/Ea.
3	6" Offset Flexible Easy-Off Tarp Stop	Add/Ea.
C	BOWS/BRACKETS	
1	Additional Heavy-Duty Bows	Add/Ea.
2	Aluminum Brackets - For Durabow™ (2)	Add/Set
D	END CAPS	
•	Front Heavy-Duty (LR/HR) Bow/Brackets (2)	*Standard
•	Poorboy Rear (LR/HR) Tapered Flap	Standard
1	Fabric Rear Cap	N/C
2	No Poorboy Rear Tapered Flap	Deduct
3	Galvanized Front Cap	Deduct
4	Aluminum Square Front Cap	Add
5	Aluminum Universal (LR) Front Cap	Add
6	Fabric Front Cap	Add
E	RIDGE SUPPORTS	
•	Ridgepole - Not Available on Durabow™ Kit	Standard
F	ROLL RETURN	
•	Rope Return	Standard
G	CRANK ARMS	
•	Crank Arm w/Extension/Square Key	Standard
1	Standard Square Key Crank Arm	Deduct
2	Leave-On Crank Option	**Add
H	RETAINERS	
•	Offset Standard Retainer (2)	Standard
1	Offset Pinless Retainer (2)	Add/Set
J	TARP OPTIONS	
•	22-Oz. Vinyl Tarp - Choice of Color	***Standard
1	Multicolored Fabric (Per Added Color)	Add
2	Tarp Reinforcements	Add/Ft.
K	OTHER OPTIONS	
1	Standard Tarp Repair Kit	Add
2	Professional Tarp Repair Kit	Add
3	Bow Sock	Add/Ea.
4	Molded Roll Tube Deflectors (2)	Add/Set

*These two (2) bows/brackets function as a front end cap on this system.
**Includes stretch cord return and wire lock pin.
***Available colors: black, red, white, royal blue, green, gray, maroon, yellow and grape. Grape and yellow NA in 22-Oz. For tan CALL.

NOTE: There is NO deduction in cost if you downgrade to 18-oz. fabric and NO warranty on the tarp.

COMPLETE KITS | *Tarps Included*

BOX LENGTH	STD BOWS	HD BOWS	TURNING POINT™	DURABOW™ ALUM BOWS
20'				
21'				
22'				
23'				
24'				
25'				
26'				
27'				
28'				
29'				
30'				
31'				
32'				
33'				
34'				
35'				
36'				
37'				
38'				
39'				
40'				
41'				
42'				
43'				
44'				
45'				
46'				
47'				
48'				

STANDARD FEATURES AND OPTIONS

A	**HOLD-DOWNS**	
•	5' Belt w/2" Ratchet Hold Down	Standard
1	Strap Hold-Down w/Hooks	Add/Ea.
2	Cable Hold-Down	Add/Ea.
B	**TARP STOPS**	
•	Easy-Off Tarp Stops	Standard
1	Standard Tarp Stop	Deduct/Ea.
2	Flexible Easy-Off Tarp Stop	Add/Ea.
3	6" Offset Easy-Off Tarp Stop	Add/Ea.
4	6" Offset Flexible Easy-Off Tarp Stop	Add/Ea.
C	**BOWS/BRACKETS**	
1	Turning Point Bows - For Alumatech Trailers	*Add
2	Adjustable Galvanized (LR/HR) Bows	Add/Ea.
3	No Galvanized (LR/HR) Bows	Deduct/Ea.
4	No Heavy-Duty Bows	Deduct/Ea.
5	No Aluminum Bows	Deduct/Ea.
6	No Durabow™ Bows	Deduct/Ea.
7	Aluminum Brackets - For Durabow™ (2)	Add/Set
D	**END CAPS**	
•	Fabric (LR/HR) Front/Rear Caps	Standard
1	Combo Caps	N/C
2	Poorboy Rear Tapered Flap	N/C
3	No Rear Cap	Deduct
4	Aluminum Universal (LR) Front Cap	N/C
5	Poorboy Front Tapered Flap	N/C
6	Poorboy Front Radius/Diagonal Fitted Flap	N/C
7	No Front Cap	Deduct
E	**RIDGE SUPPORTS**	
•	1" Ridge Strap - Std. & Alum. Bow Kit	Standard
•	Ridgepole – HD Bow Kit & TP Bow Kit	Standard
1	Additional 1" or 2" Ridge Strap (39')	Add/Ea.
2	Additional 1" or 2" Ridge Strap (46')	Add/Ea.
3	Additional 1" or 2" Ridge Strap (56')	Add/Ea.
4	No Ridge Strap	Deduct/Ea.
F	**ROLL RETURN**	
•	Rope Return	Standard
G	**CRANK ARMS**	
•	Crank Arm w/Extension/Square Key	Standard
1	Standard Square Key Crank Arm	Deduct
2	Leave-On Crank Option	**Add
H	**RETAINERS**	
•	Offset Standard Retainer (2)	Standard
1	Offset Pinless Retainer (2)	Add/Set
J	**TARP OPTIONS**	
•	22-Oz Vinyl Tarp - Choice of Color	***Standard
1	Multicolored Fabric (Per Added Color)	Add
2	Bow Reinforcements (10")	Add
3	Tarp Reinforcements	Add/Ft.
K	**OTHER OPTIONS**	
1	Standard Tarp Repair Kit	Add
2	Professional Tarp Repair Kit	Add
3	Bow Sock	Add/Ea.
4	Molded Roll Tube Deflectors (2)	Add/Set

*Turning Point™ bows/brackets are used for 39' Alumatech trailer ONLY.
**Includes stretch cord return and wire lock pin.
***Available colors: black, red, white, royal blue, green, gray, maroon, yellow and grape. Grape and yellow NA in 22-Oz. For tan CALL.

NOTE: There is NO deduction in cost if you downgrade to 18-oz. fabric and NO warranty on the tarp.

HARDWARE QTY

SIZE	TARP STOPS	RATCHETS	STD BOWS	HD BOWS	TURNING POINT™	DURABOW™	ALUM BOWS
20' to 22'	3	3	4	2	3	4	4
23'	3	3	4	2	3	5	5
24' to 26'	4	4	5	2	4	5	5
27' to 30'	5	5	6	2	5	6	6
31' to 34'	5	5	7	2	5	7	7
35' to 38'	6	6	8	3	6	8	8
39' to 43'	6	6	9	3	6	9	9
44' to 46'	7	7	10	3	7	10	10
47' to 48'	7	7	11	4	7	11	11

OPEN-TOP VANS

COMPLETE KITS w/2" ROLL TUBE | *Tarps Included*

BOX LENGTH	18-OZ	22-OZ
28'		
30'		
32'		
34'		
36'		
38'		
40'		
42'		
44'		
46'		
48'		
50'		
52'		
54'		

COMPLETE KITS w/3" ROLL TUBE* | *Tarps Included*

BOX LENGTH	18-OZ	22-OZ
28'		
30'		
32'		
34'		
36'		
38'		
40'		
42'		
44'		
46'		
48'		
50'		
52'		
54'		

*Kits w/3" roll tube for electric kits only.

HARDWARE QTY

SIZE	TARP STOPS	RATCHETS	STD BOWS	HD BOWS
28' to 30'	5	5	6	2
31' to 34'	5	5	7	2
35' to 38'	6	6	8	3
39' to 43'	6	6	9	3
44' to 46'	7	7	10	3
47' to 50'	7	7	11	4
51' to 54'	8	8	12	4

STANDARD FEATURES AND OPTIONS

A	**HOLD-DOWNS**	
•	9' Belt w/2" Ratchet Hold Down	Standard
1	Strap Hold-Down w/Hooks	Add/Ea.
2	Cable Hold-Down	Add/Ea.
B	**TARP STOPS**	
•	6" Offset Easy-Off Tarp Stop	Standard
1	6" Offset Flexible Easy-Off Tarp Stop	Add/Ea.
2	6" Offset Belt Flex™ Tarp Stop	Add/Ea.
3	Easy-Off Tarp Stop	Deduct/Ea.
4	Flexible Easy-Off Tarp Stop	Add/Ea.
5	Easy-Off Belt Flex™ Tarp Stop	N/C
C	**BOWS/BRACKETS**	
•	No Bows	Standard
1	Galvanized (Flat/LR) Bows	Add/Ea.
2	Adjustable Galvanized (LR/HR) Bows	Add/Ea.
3	Durabow™ w/Steel Bracket	Add/Ea.
4	Durabow™ w/Aluminum Bracket	Add/Ea.
5	Heavy-Duty (Flat/LR) Bows	Add/Ea.
6	Aluminum Bows	Add/Ea.
D	**END CAPS**	
•	Aluminum (Flat) End Caps	Standard
1	Aluminum Square (LR) Rear Cap	Add
2	Galvanized (LR) Rear Cap	N/C
3	Fabric (LR) Rear Cap	Add
4	Poorboy Rear Tapered Flap	N/C
5	No (Flat) Rear Cap	Deduct
6	Aluminum Square (LR) Front Cap	N/C
7	Aluminum Radius/Diagonal (LR) Front Cap	Add
8	Aluminum Universal (Flat/LR) Front Cap	Add
9	Galvanized (LR) Front Cap	Deduct
10	Fabric (LR) Front Cap	Add
11	Poorboy Front Tapered Flap	N/C
12	Poorboy Front Radius/Diagonal Fitted Flap	Add
13	No (Flat) Front Cap	Deduct
E	**RIDGE SUPPORTS**	
•	No Ridge Strap	Standard
1	1" or 2" Ridge Strap (39')	Add/Ea.
2	1" or 2" Ridge Strap (46')	Add/Ea.
3	1" or 2" Ridge Strap (56')	Add/Ea.
F	**ROLL RETURN**	
•	Rope Return	Standard
G	**CRANK ARMS**	
•	Crank Arm w/Extension/Square Key	Standard
1	Standard Square Key Crank Arm	Deduct
2	Leave-On Crank Option	*Add
H	**RETAINERS**	
•	Offset Standard Retainer (2)	Standard
1	Offset Pinless Retainer (2)	Add/Set
J	**TARP OPTIONS**	
•	18-Oz Vinyl Tarp - Choice of Color	**Standard
•	22-Oz Vinyl Tarp - Choice of Color	**Add
1	Multicolored Fabric (Per Added Color)	Add
2	Mesh Insert 72" x 26'	***Add/Ea.
3	Tarp Reinforcements	Add/Ft.
K	**OTHER OPTIONS**	
1	Rear Cable Return - Used w/Metal Caps	Add
2	Standard Tarp Repair Kit	Add
3	Professional Tarp Repair Kit	Add
4	Bow Sock	Add/Ea.
5	Molded Roll Tube Deflectors (2)	Add/Set

*Includes stretch cord return and wire lock pin.

**Available colors: black, red, white, royal blue, green, gray, maroon, yellow and grape. Grape and yellow NA in 22-Oz. For tan CALL.

***Inserts smaller than standard size will be priced the same. If larger than standard, a special quote will be needed.

WOOD CHIP TRAILERS

COMPLETE KITS w/2" ROLL TUBE | *Tarps Included*

BOX LENGTH	18-OZ	MESH
38'		
40'		
42'		
44'		
46'		
48'		
50'		
52'		
54'		

COMPLETE KITS w/3" ROLL TUBE* | *Tarps Included*

BOX LENGTH	18-OZ	MESH
38'		
40'		
42'		
44'		
46'		
48'		
50'		
52'		
54'		

*Kits w/3" roll tube for electric kits only.

HARDWARE QTY

SIZE	TARP STOPS	RATCHETS	STD BOWS	HD BOWS
38'	6	14	8	3
39' to 43'	6	14	9	3
44' to 46'	7	16	10	3
47' to 50'	7	16	11	4
51' to 54'	8	18	12	4

STANDARD FEATURES AND OPTIONS

A	**HOLD-DOWNS**	
•	9' Belt w/2" Ratchet Hold Down	Standard
1	Strap Hold-Down w/Hooks	Add/Ea.
2	Cable Hold-Down	Add/Ea.
B	**TARP STOPS**	
•	6" Offset Belt Flex™ Tarp Stop	Standard
1	6" Offset Flexible Easy-Off Tarp Stop	Deduct/Ea.
2	6" Offset Easy-Off Tarp Stop	Deduct/Ea.
3	Easy-Off Belt Flex™ Tarp Stop	Deduct/Ea.
4	Flexible Easy-Off Tarp Stop	Deduct/Ea.
5	Easy-Off Tarp Stop	Deduct/Ea.
C	**BOWS/BRACKETS**	
•	No Bows	Standard
1	Galvanized (Flat/LR) Bows	Add/Ea.
2	Adjustable Galvanized (LR/HR) Bows	Add/Ea.
3	Heavy-Duty (Flat/LR) Bows	Add/Ea.
D	**END CAPS**	
•	Aluminum Radius/Diagonal (Flat) Front Cap	Standard
•	Aluminum Square (Flat) Rear Cap	Standard
1	Aluminum Square (LR) Rear Cap	Add
2	Galvanized (LR) Rear Cap	N/C
3	Poorboy Rear Tapered Flap	N/C
4	No (Flat) Rear Cap	Deduct
5	Aluminum Square (LR) Front Cap	Deduct
6	Aluminum Radius/Diagonal (LR) Front Cap	N/C
7	Aluminum Universal (Flat/LR) Front Cap	Add
8	Galvanized (LR) Front Cap	Deduct
9	Poorboy Front Tapered Flap	Deduct
10	No (Flat) Front Cap	Deduct
E	**RIDGE SUPPORTS**	
•	No Ridge Strap	Standard
1	1" or 2" Ridge Strap (39')	Add/Ea.
2	1" or 2" Ridge Strap (46')	Add/Ea.
3	1" or 2" Ridge Strap (56')	Add/Ea.
F	**ROLL RETURN**	
•	Rope Return	Standard
G	**CRANK ARMS**	
•	Crank Arm w/Extension/Square Key	Standard
1	Standard Square Key Crank Arm	Deduct
2	Leave-On Crank Option	*Add
H	**RETAINERS**	
•	Offset Standard Retainer (2)	Standard
1	Offset Pinless Retainer (2)	Add/Set
J	**TARP OPTIONS**	
•	18-Oz Vinyl Tarp - Choice of Color	**Standard
•	Mesh Tarp	***Add
1	Multicolored Fabric (per added color)	Add
2	Mesh Insert 72" x 26'	****Add/Ea.
3	Tarp Reinforcements	Add/Ft.
K	**OTHER OPTIONS**	
1	Rear Cable Return - Used w/Metal Caps	Add
2	Standard Tarp Repair Kit	Add
3	Professional Tarp Repair Kit	Add
4	Bow Sock	Add/Ea.
5	Molded Roll Tube Deflectors (2)	Add/Set

*Includes stretch cord return and wire lock pin.

**Available colors: black, red, white, royal blue, green, gray, maroon, yellow and grape. Grape and Yellow N/A in 22-Oz. For tan CALL.

***Available in black only.

****Inserts smaller than standard size will be priced the same. If larger than standard, a special quote will be needed.

TARP PRICING DIRECTIONS

Pricing given is for black fabric ONLY; add tarp options for a final price. For all other colors, add tarp price and tarp options, find the subtotal and then add a 15% upcharge. [TARP + OPTIONS = SUBTOTAL x 15% = UPCHARGE] Additional available colors: black, red, white, royal blue, green, gray, maroon, yellow and grape. Grape and Yellow N/A in 22-Oz.. For tan CALL.

NOTE: Replacement tarp pricing for 2" & 3" roll tubes are the same price. The roll tube pocket for a 2" tube is 5" and the pocket for a 3" roll tube is 7".

	(BOX WIDTH) FINISHED TARP WIDTH					
	(96") / 112"	(102") / 118"	(96") / 112"	(102") / 118"	(96") / 112"	(102") / 118"
	18-OZ TARP		22-OZ TARP		22-OZ W/RIDGEPOLE	
BOX LENGTH						
10'						
11'						
12'						
13'						
14'						
15'						
16'						
17'						
18'						
19'						
20'						
21'						
22'						
23'						
24'						
25'						
26'						
27'						
28'						
29'						
30'						
31'						
32'						
33'						
34'						
35'						
36'						
37'						
38'						
39'						
40'						
41'						
42'						
43'						
44'						
45'						
46'						
47'						
48'						
49'						
50'						
51'						
52'						
53'						
54'						

(96") / 112"	(102") / 118"
MESH	

18-OZ TARP OPTIONS	
Multicolored Fabric	Add/Ea.
Tarp Reinforcements	Add/Ft.
Poorboy Rear Tapered Flap	Add
Poorboy Front Tapered Flap	Add
Poorboy Diag./Radius Fitted Flap	Add
Additional 6" in Width	Add/Ft.

*Additional cost per added color.

22-OZ/MESH TARP OPTIONS	
Multicolored Fabric	Add/Ea.
Tarp Reinforcements	Add/Ft.
Poorboy Rear Tapered Flap	Add
Poorboy Front Tapered Flap	Add
Poorboy Diag./Radius Fitted Flap	Add
Additional 6" in Width	Add/Ft.

*Additional cost per added color.

U-CLAMPS	
2" ROLL TUBE	
1115966	U-Clamp Kit 2" - (3)
1118643	U-Clamp Kit 2" - (8)
1118644	U-Clamp Kit 2" - (10)
1118663	U-Clamp Kit 2" - (14)
3" ROLL TUBE	
1126790	U-Clamp Kit 3" - (3)
1126791	U-Clamp Kit 3" - (8)
1126792	U-Clamp Kit 3" - (10)
1126793	U-Clamp Kit 3" - (14)

NOTE: Includes self-tapping screws.

SIZE	U-CLAMPS
10' to 18'	8
19' to 34'	10
35' to 43'	14
44' to 50'	16
51' to 54'	18

CRANK ARMS

SQUARE KEY

- Pivots on a Knuckle and Folds for Storage
- Stores on Side to Assist Rear Doors

HOLD-DOWNS

RATCHET HOLD-DOWN

- Available in D-Ring and Feed-Through Hook Styles
- Optional Quick-Release Straps

STRAP TIE DOWN

- Fast and Easy to Use
- Durable, Withstands Use
- In 7' and 9' Lengths

RETURNS

ROPE

- Solid Braid Run Through Hole in Tarp Helps to Pull Tarp Over
- Secure with Box Hooks

CABLE-LOK

TELESCOPING/INDEXING CRANK ARM

Optimum adjustment in a crank arm! Nylon sleeve bushing lets you quickly change arm length with minimal resistance. An indexing handle adjusts to six angles set by 60° increments.

END CAP OPTIONS

Our galvanized steel caps feature a weld-free construction that offers corrosion resistance and a front guard that reduces wind whip. The stainless steel caps were created for increased corrosion resistance.

DURABUILT™ MOTOR

The Durabuilt™ motor is backed by a 3-year limited warranty. All wiring, cable ties and connectors necessary for installation are included in the system when you receive it. Manual systems are available.

REMOTE OPTIONS AVAILABLE

Upgrade to one of our ShurLink™ Wireless System remote options, PRO and EZR™. These eliminate the need to run a second set of wires to the cab for the rocker switch.

KEY FEATURES

- Galvanized Bows/Brackets
- Easy-Off Tarp Stops
- Galvanized End Caps
- Long Telescoping Crank Arm
- Aluminum Roll Tube
- Galvanized Fixed Tube
- Spool with Galvanized Cable and Zinc-Plated Ratchet
- Adjustable Tension

CABLE-LOK ELECTRIC

KEY FEATURES | ROCKER SWITCH

- Durabuilt™ Motor, Wire or SMARTwire™ with Dual-Conductor Plug, Switch, Solenoid, Breaker, Arm, Bungee Return

KEY FEATURES | SHURLINK™ REMOTES

- Durabuilt™ Motor, Wire/SMARTwire™ with Dual-Conductor Plug, Switch, Solenoid, Breaker, Arm, Bungee Return, ShurLink PRO™/EZR™ Wireless Kit

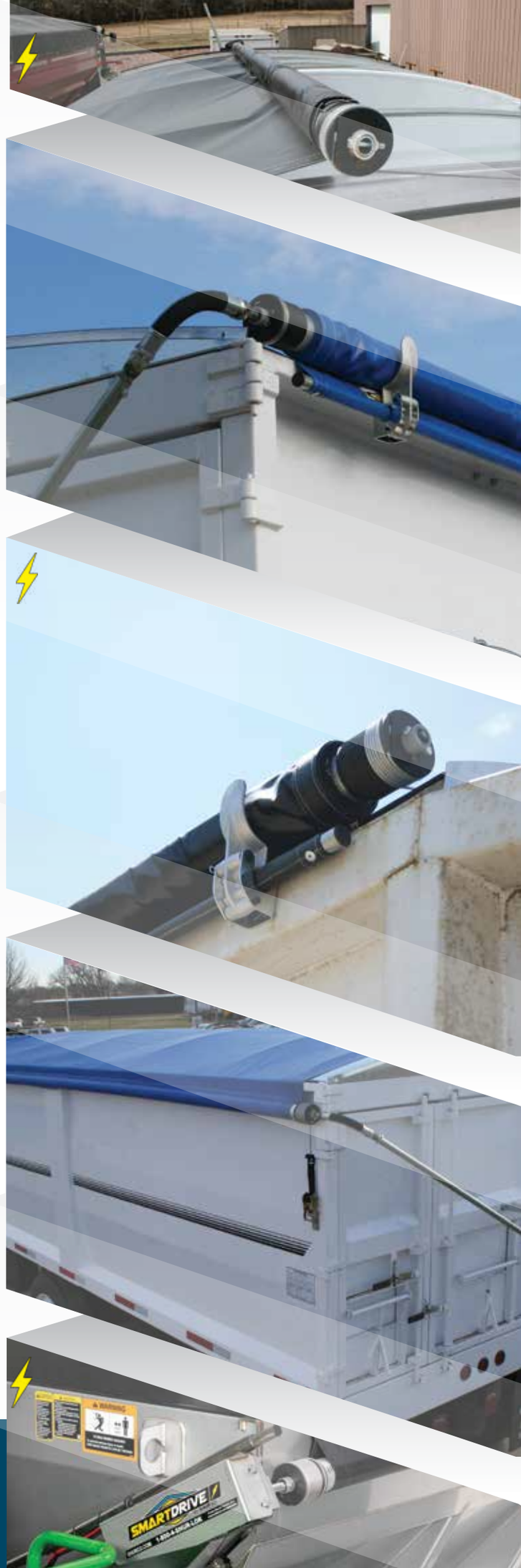

Table of Contents

Replacement Parts

MORE PRODUCT INFORMATION

Want to learn more? Simply scan to explore further details about Cable-Lok™ features.

COMPLETE KITS | *Tarps Included*

BOX LENGTH	UP TO 8'6" WIDTH
10'	
11'	
12'	
13'	
14'	
15'	
16'	
17'	
18'	
19'	
20'	
21'	
22'	

NOTE: MUST have 8" extensions.

HARDWARE QTY

SIZE	TARP STOPS	STD BOWS	HD BOWS
10' to 14'	3	2	2
15' to 18'	3	3	2
19' to 22'	4	4	2

STANDARD FEATURES AND OPTIONS

A	**TARP STOPS**	
•	Easy-Off Tarp Stop	Standard
1	6" Offset Easy-Off Tarp Stop	Add/Ea.
2	Flexible Easy-Off Tarp Stop	Add/Ea.
3	6" Offset Flexible Easy-Off Tarp Stop	Add/Ea.
B	**BOWS/BRACKETS**	
•	No Bows	Standard
1	Durabow™ w/Steel Bracket	Add/Ea.
2	Durabow™ w/Aluminum Bracket	Add/Ea.
3	Heavy-Duty (LR/HR) Bows	Add/Ea.
C	**END CAPS**	
•	Galvanized (LR/HR) End Caps	Standard
1	Aluminum Heavy-Duty Inverted Caps	Add/Set
D	**RIDGE SUPPORTS**	
•	No Ridge Strap	Standard
1	1" Ridge Strap (Up to 24')	Add/Ea.
E	**CRANK ARMS**	
•	Galvanized Telescoping Crank (8'3" to 12'10")	Standard
1	Galvanized Telescoping Crank (14'3" to 17')	Add
F	**RETAINERS**	
•	Telescoping Nylon Retainers	*Standard
1	Additional Nylon Retainer	Add
2	Telescoping Retainer w/Standoff	Add
G	**SPOOLS/CABLES**	
•	Spool w/18" Galvanized Cables/Ratchets	Standard
1	42" Galvanized Cables/Ratchets	N/C
H	**ROLL TUBE/TARP ATTACHMENT**	
•	Aluminum Roll Tube/Channeled Tarp Attachment	Standard
J	**FIXED TUBE**	
•	Galvanized Fixed Tube	Standard
K	**TARP OPTIONS**	
•	18-Oz. Vinyl Tarp - Choice of Color	**Standard

*(1) Crank retainer provided as standard equipment for this system.
**Available colors: black, red, white, royal blue, green, gray, maroon, yellow and grape. For tan CALL.

CABLE-LOK™ ELECTRIC

KIT NAME	MOUNTING	MOTOR	MODE OF OPERATION	P/N
Cable-Lok™ Electric	Front	Durabuilt™	Rocker	1125873
Cable-Lok™ Electric	Rear	Durabuilt™	Rocker	1125872

NOTE: Uses the Durabuilt™ Motor. Operate the tarp system by utilizing a rocker switch inside the cab.

TARP PRICING DIRECTIONS

Pricing given is for black fabric ONLY. For all other colors, add a 15% upcharge to the price. Additional available colors: black, red, white, royal blue, green, gray, maroon, yellow and grape. For tan CALL.

*Box length is required to determine tarp length. End cap height is needed to determine tarp width.

NOTE: Typical tarp length is 1' LESS than box length. For a belly dump with inverted end caps, tarp length will be 1' GREATER than box length.

BOX LENGTH	BOX WIDTH*	
	8'	8'6"
9'		
10'		
11'		
12'		
13'		
14'		
15'		
16'		
17'		
18'		
19'		
20'		
21'		
22'		
23'		

BOWS/BRACKETS

DURABOW™

- Molded Resin Bow Supports Tarp but has Enough Give to be Left on Loading

HEAVY-DUTY BOW

- Permits Bow Spacing up to 12' Apart
- In Low-Rise/High-Rise

CRANK ARMS

FLEXIBLE HOSE ADJUSTMENT

- Reinforced Flexible Hose Assembly Attached to the Arm
- Moves Tarp Spool Easily Across Caps

TELESCOPING/INDEXING

- Nylon Sleeve Bushing Offers Arm Length and Handle Adjustment by 60° Increments. 2 PC.

RETAINERS & STANDOFFS

STANDOFFS

- Choose from 2", 3", 7" and 11" Sizes for Optimal Retainer Positioning

TELESCOPING NYLON RETAINER

- Secures Telescoping/Indexing Handle
- Prevents Extension of Handle During Transport

ELECTRIC OPERATION

MOTOR REVERSING SOLENOID

- 12V Solenoid with 2 Point Mount with Black Wire

SOLENOID COVER

- Mounts Over Solenoid to Protect Wire Connections

SHURLINK EZR™ REMOTE

- Simple Two-Button Remote
- Up to 5 Devices Allowed

SHURLINK PRO™ REMOTE

- Six-Button Remote with Digital Screen
- Up to 30 Devices Allowed

SHURLINK RECEIVERS

- Selection of Receivers (RX'S) for almost any Application
- Two-Piece Solenoid Enclosure

END CAPS

GALVANIZED STEEL

- Weld-Free Construction - Corrosion Resistance
- Front Guard Reduces Whip

HD ALUMINUM INVERTED

- Allows Free Loading Over Trailer
- Reduces Cap Damage by Loaders and Materials

FIXED TUBES

GALVANIZED STEEL

- Anchors Tarp on One Side of Box or Trailer to Facilitate Tarp Rolling
- 1/8" Diameter

MOTORS

DURABUILT™ MOTOR w/COVER - 2 ⅛" SHAFT

- Available Motor P/N: 1121307
- 3-Year Warranty

RATCHET/CABLE ASSEM.

GALVANIZED STEEL CABLE/ ZINC-PLATED RATCHET

- Allows for Tarp Tension Adjustments and Resists Corrosion
- Available in 18" and 42" Cable Lengths

RIDGE SUPPORTS

RIDGE STRAP

- Stretch-Resistant Webbing Keeps Tarp from Sagging Between Bows
- 1" and 2" Sizes

TARP STOP UPRIGHTS

EASY-OFF

- Keeps Tarp from Getting Hung Up and Rubbing

FLEXIBLE EASY-OFF

- Bends in Subzero Cold
- Impact and Abrasion Resistant with Safety Plates

6" OFFSET EASY-OFF

- Taller with Patented Curved Tip
- Offset Design Gives Maximum Loading Space

6" OFFSET FLEXIBLE EASY-OFF

- All Advantages of Regular 6" Offset Easy-Off Stops
- Bends in Subzero Cold

IRONSIDE2

MOTOR UPGRADES

- Direct-Drive Motor Eliminates Chain Stretching and Corrosion Fails
- Hex-Though-Bore Design Eliminates Need for Roll Tube Bolted Connections Directly to Motor
- Encoder Wire Allows Use of ShurLink™ Remote Operation in Express Mode

ARM UPGRADES

- Patented Flexible Arm and Motor Connection Eliminates Axial Load on the Gearbox and Transfers Load to Arm and Roll Tube
- Low Profile Front Arm Location is 10" from Arm Mount to End of Motor, Original IronSide™ was 20"
- Black Powder-Coated Finish Provides Improved Corrosion Resistance
- Pre-Wired ShurLink™ Remote Receiver Box Allows for Easy Installation
- Express Mode Operation Allows Tarp to Fully Open/Close with a Button

SPRING UPGRADES

- Compact Spring Design Provides Motor and Spring Pivot Location Closer to Trailer
- Black Powder-Coated Finish Provides Improved Corrosion Resistance
- Color-Coded Front (Black) and Rear (Red) Springs Eliminates Confusion

SMARTWIRE™ CONNECTIONS

- Molded Connections for Trailer and Motor
- Allows Conversion from Rocker Switch to ShurLink™ Remotes

TRACTION WHEEL

- Solid Molded Traction Wheel Grip Design Improves Performance

WARRANTY POLICY

- 3-year Warranty on Motor and Arms
- 1-Year Warranty on Electrical Components

Table of Contents

Replacement Parts

MORE PRODUCT INFORMATION

Want to learn more? Simply scan to explore further details about IronSide2™ features.

MODE OF OPERATION | ROCKER | *Tarp Included*

KIT NAME	BOX LENGTH	ARM TYPE	BRACKETRY
IronSide2™	32' to 35'	Double Arm	*Weld On
IronSide2™	36' to 38'	Double Arm	*Weld On
IronSide2™	**Up to 24' Pup	Double Arm	*Weld On

MODE OF OPERATION | SHURLINK EZR™ | *Tarp Included*

KIT NAME	BOX LENGTH	ARM TYPE	BRACKETRY
IronSide2™	32' to 35'	Double Arm	*Weld On
IronSide2™	36' to 38'	Double Arm	*Weld On
IronSide2™	**Up to 24' Pup	Double Arm	*Weld On

MODE OF OPERATION | SHURLINK PRO™ | *Tarp Included*

KIT NAME	BOX LENGTH	ARM TYPE	BRACKETRY
IronSide2™	32' to 35'	Double Arm	*Weld On
IronSide2™	36' to 38'	Double Arm	*Weld On
IronSide2™	**Up to 24' Pup	Double Arm	*Weld On

*Bracket MUST be welded onto trailer before installing system.
**When ordering both lead and pup, call to ensure that correct wiring is specified.

STANDARD FEATURES AND OPTIONS

A	ROLL TUBE	
•	3.55" OD Aluminum Tubing w/34" Splice	Standard
B	PUSH-OUT	
•	Front/Rear Push-Out - Right Side	Standard
C	SPRING ASSEMBLY	
•	Front/Rear Torsion Spring	Standard
D	SUPPORT BRACKETS	
•	Universal Mounting Bracket - Weld-On	*Standard
E	TARP OPTIONS	
•	Black Mesh w/Vinyl Reinforcements	Standard
1	Vinyl	**N/C

*Bolt-On mounting brackets may be ordered, depending on trailer make.
**Available colors: black, red, white, royal blue, green, gray, maroon, yellow and grape. Grape and Yellow N/A in 22-Oz. For tan CALL.

REPLACEMENT TARPS

P/N	LENGTH	WIDTH	FABRIC
1901332	21'6"	144"	Black Mesh - Vinyl Reinforced
1901330	31'10"	144"	Black Mesh - Vinyl Reinforced
1902988	32'10"	144"	Black Mesh - Vinyl Reinforced
1901286	33'10"	144"	Black Mesh - Vinyl Reinforced
1901287	34'10"	144"	Black Mesh - Vinyl Reinforced
1901288	35'10"	144"	Black Mesh - Vinyl Reinforced
1901480	37'10"	144"	Black Mesh - Vinyl Reinforced
1901322	33'10"	144"	*Black Mesh
1901323	34'10"	144"	*Black Mesh
1901324	35'10"	144"	*Black Mesh

*Tarps are NOT reinforced with vinyl on edges. Replaces SideKick 2 Tarp.

OPTIONS AND FEATURES

ELECTRIC OPERATION

MOTOR REVERSING SOLENOID
P/N 1703845

SOLENOID COVER
P/N 1703896

SHURLINK EZR™ REMOTE
P/N 1131576

SHURLINK PRO™ REMOTE
P/N 1131575

SHURLINK RECEIVER - NON EXPRESS
SEE REPLACEMENT PARTS FOR P/N

MOTORS

IRONSIDE2™ | APEX™ MOTOR
P/N 1127091

SPRINGS

7.5-COIL TORSION SPRING
P/N 1705828 - BLACK - LEFT
P/N 1705829 - RED - RIGHT

TARPS & ACCESSORIES

SHURLINK

KEY FEATURES

- Two new water-tight receiver enclosures and two new remotes.
- ShurLink™ utilizes a single communication platform for all devices allowing the new family of receivers and remotes to conveniently operate nearly every application.
- A phone app brings the ability for customization and configuration to your ShurLink™ system. Available for iOS and Android.
- EZR™, PRO and the app all use the same ShurLink™ Wireless System, making it easy to mix and match any combination of remotes, the app, and the receivers on a single trailer or train.

MORE PRODUCT INFORMATION

Want to learn more? Simply scan to explore further details the ShurLink™ Wireless Remote System.

E-COMMERCE STORE

Search through our large selection of Genuine replacement parts, tarps, and more. Shop Shurco today!

The ShurLink™ Wireless System, offered exclusively from Shurco introduces innovative, new properties while retaining your favorite features from its predecessor, the SMARTransmitter® series. ShurLink™ Wireless System has replaced the SMART2™ and SMART3™ remote with two new remotes, the ShurLink EZR™ and the ShurLink PRO™.

As an innovator in the tarping industry, Shur-Co™ has a long-standing tradition of engineering, manufacturing and selling the most advanced products on the market. This tradition continues with ShurLink™. See below to compare the features of the new remote series.

SMART REMOTE TO SHURLINK™ REMOTE (TX) COMPARISON

FEATURES	SMART3™ (DISCONTINUED)	ShurLink EZR™ (NEW)	SMART2™ (DISCONTINUED)	ShurLink PRO™ (NEW)
Operation Type	Hand Held Remote	Hand Held Remote	Hand Held Remote	Hand Held Remote
Operation Technology	SMARTech™	ShurLink™ Technology	SMARTech™	ShurLink™ Technology
Wireless Operation Available	Yes	Yes	Yes	Yes
Wireless Range	<100 Feet	Up to 150 Feet	<100 Feet	Up to 150 Feet
Wireless Two-Way Communication	No	No	Yes	Yes
Precision Control	Yes	Yes	Yes	Yes
Number of Devices	5	5	100	30
Power Source	Two AAA Batteries	Two AAA Batteries	Rechargeable Lithium Bat.	Rechargeable Lithium Bat.
Battery Charging Cradle	No	No	Yes	Yes
Digital Display	No	No	Yes, Black and White	Yes, Colored
Ability to Name Devices	Sticker on Remote Only	Sticker on Remote Only	With Digital Display	With Digital Display
Ability to Reorder Paired Device List	No	No	Yes	Yes
Current/Active Device ID	Yes	Yes	Yes, with Status Bar	Yes, with Status Bar
Back-lit Digital Display	No	No	Yes	Yes
Sealed Control Box	Yes	Yes	Yes	Yes
Utilizes SMARTwire™ Connections	Yes	Yes	Yes	Yes
Protective Flip-Style Cover	Yes	Yes	Yes	Yes
Buttons Protected by Cover	Yes	Yes	Yes (Key)	Yes
Any Button Emergency Shut-Off	Yes	Yes	Yes	Yes
Interference by Competing Remote	No	No	No	No

APP STORE

APP SUPPORT

SHURLINK™APP

Download the ShurLink™ Wireless app by scanning the APP STORE QR code. Scan the YOUTUBE QR code for product support.

LITEALL

WORK LIGHTS

High-intensity LED flood beam in hinged bracket swivels to direct light. 13' power cord has automotive-style quick connections.

SHURLINK™ WIRELESS REMOTE OPERATION

SMART-touch technology for precision control of Shurco electrics! The ShurLink PRO™ remote offers 2-way communication in an easy-to-read digital display.

20" EXTENSION CABLE

Two-conductor 16-gauge cable provides additional positioning flexibility for LiteALL™ flood beams. Automotive-style quick connections make for easy installation of wiring.

MORE PRODUCT INFORMATION

Want to learn more? Simply scan to explore further details the LiteALL™ wireless LED work light.

E-COMMERCE STORE

Search through our large selection of Genuine replacement parts, tarps, and more. Shop Shurco today!

SHURLINK™ LITEALL™

w/ SMARTwire™ ADAPTER	P/N
ShurLink™ LiteALL™ - 2 Light	1131664
w/o SMARTwire™ ADAPTER	**P/N**
ShurLink™ LiteALL™ - 2 Light	1131666

NOTE: Includes control module, lights, complete mounting hardware. Does NOT include remote or extension cable.

LITEALL™ ADD ON

CONTROL MODULE	P/N
ShurLink™ Control Module w/WeatherPack™	1131665
REMOTES	**P/N**
ShurLink EZR™ Remote	1131576
ShurLink PRO™ Remote w/Cradle/Charging Cable	1131575
ShurLink™ Charg. Cable USB - A-Male to C-Male - 3'	1706836
WORK LIGHT	**P/N**
LED Work Light w/WeatherPack™ Connector	1122706
Work Light Mtg Hdw	1120672
EXTENSION CABLES	**P/N**
Extension Cable w/WeatherPack™ - 16 Ga. - 10'	1126433
Extension Cable w/WeatherPack™ - 16 Ga. - 20'	1122742
Extension Cable w/WeatherPack™ - 18 Ga. - 20'	1122704
SMARTwire™ CONNECTORS	**P/N**
SMARTwire™ Adapter w/WeatherPack™	1122690
SMARTwire™ Dual-Conductor Socket - 6 Ga. x 3'6"	1120670
OUTPUT HARDWARE	**P/N**
Output Splitter w/WeatherPack™	1122705
Output Adapter Cable	1127599
JUNCTION HARDWARE	**P/N**
Junction Block Kit w/Harness Plug (1)	1120849

EXTENSION CABLES

P/N 1126433 - 16 Ga. x 10'
P/N 1122742 - 16 Ga. x 20'
P/N 1122704 - 18 Ga. x 20'

- For power connection w/WeatherPack™ connectors provide additional flexibility in mounting location of control module.
- Available in 10' or 20' lengths.
- Two-conductor 18-ga. cable offers additional positioning flex for LiteALL™ LED flood beams.
- WeatherPack™ Connectors makes for east install.

WORK LIGHT

P/N 1122706

- High-intensity LED flood beam in hinged bracket swivels to direct light.
- 13" cord WeatherPack™ connectors.
- Power: 24 watts. Outputs: 1600 lumens. IP

Rating: AP67. Estimated Life: 30,000 Hours. Purchase of Mounting HDW Kit recommended for each light purchased. Contains rubber grommet insert, rubber grommet, nylon wire clips (6), self-drilling screws (6).

SMARTWIRE™ ADAPTER

P/N 1122690

- Easy install to SMARTwire™systems: 4500 Series HD, Auto-Trap™ and ProTrap®. User supply 12V DC current to LiteALL™ module.
- Reduces wiring of connectors and eliminates need to splice into existing truck/trailer wiring.
- 14-ga. 1' extension. Also available with molded 2-way bullet connector.

JUNCTION BLOCK KIT W/HARNESS PLUG

P/N 1120849

- Provides connection to 12V power on pre-existing 4500 systems (already installed on 4500 HD/ProTrap® combo kits).
- On existing systems, unplug SMARTwire™ dual-connector socket from 4500 receiver box and insert SMARTwire™ junction block.
- LiteALL™ will then draw power from block using SMARTwire™ adapter wire w/WealtherPack™ connectors.

2-WAY CONDUCTOR SOCKET

P/N 1120670

- Provides trailer socket connection for supplying 12V power if none previously exits.
- Opposite end of 3" conductor socket wire is plug-and-play compatible with SMARTwire™ junction blocks.

SERVICE TRUCK POWER KITS

KEY FEATURES

- Mounts on the Vehicle Grille or other Convenient Locations
- Provides Power to Trailers with Horizontal or Vertical Power Sockets
- Ideal for Machinery that may Require Frequent jump starts
- Sealed SMARTwire™ Connector Mid-Jumper Cables/Service Truck
- Run Tarp Systems that are Typically Operated by Rocker Switch
- Light up the Scene with LiteALL™ LED Flood Beam
- Increase the Number of Sealed SMARTwire™ Connections
- Extend your Reach with Extension Cables from Your Service Truck to the Accessories

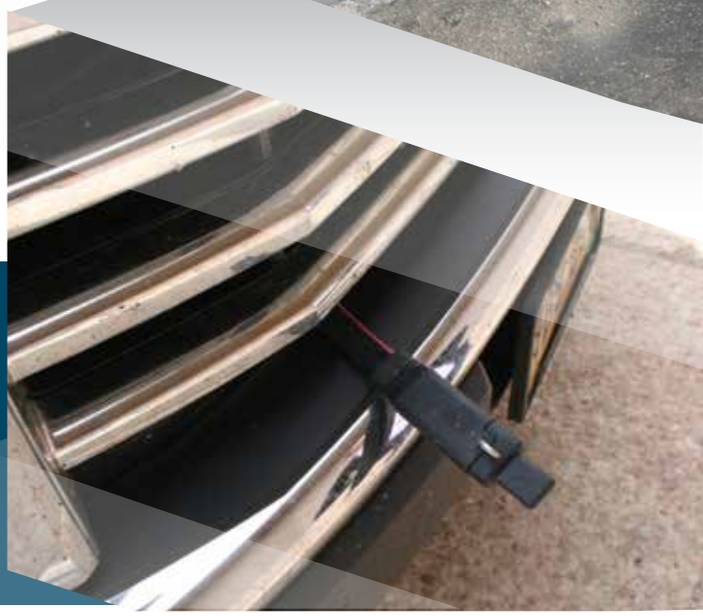

MORE PRODUCT INFORMATION
Want to learn more? Simply scan to explore further details about our Service Truck Power Kits.

E-COMMERCE STORE
Search through our large selection of Genuine replacement parts, tarps, and more. Shop Shurco today!

2-WAY CONDUCTOR PLUG
P/N 1128066

JUMPER CABLE KIT
P/N 1128067

ROTARY SWITCH
P/N 1128410

2-WAY CONDUCTOR SOCKET
P/N 1120670

JUNCTION BLOCK W/HARNESS PLUG
P/N 1120849

EXTENSION CABLE
P/N 1128099 - 8' P/N 1128101 - 16'
P/N 1128100 - 12' P/N 1128102 - 20'

ACCESSORIES BAG
P/N 1128299

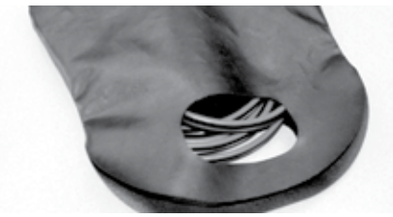

LED WORK LIGHTS
P/N 1128324

MOUNTS ON VEHICLE GRILLE OR OTHER CONVENIENT LOCATION	P/N
Service Truck Power Kit w/Male 2-Pole Conductor	1128052
Base Service Truck Power Kit	1128064
Service Truck Power Kit w/o Circuit Breaker	1128488
- 4-Ga. Wire, 12' Long	
- High-Quality Manual Reset Circuit Breaker	
POWER FOR TRAILERS WITH HORIZONTAL OR VERTICAL SOCKETS	**P/N**
2-Way Conductor Plug	1128065
- 6-Ga. Wire, 10' Long	
- Use w/Service Truck Power Kit and 2-Way Socket	
IDEAL FOR MACHINERY NEEDING FREQUENT JUMP STARTS	**P/N**
2-Way Conductor Socket	1128066
- 6-Ga. Wire, 3' 6" Long	
- Includes Mounting Bracket	
- Installs on Winches or other 12V Motors	
- Use w/Service Truck Power Kit and 2-Way Plug	
EXTENDS REACH FROM SERVICE TRUCK TO ACCESSORIES	**P/N**
Extension Cable - 8'	1128099
Extension Cable - 12'	1128100
Extension Cable - 16'	1128101
Extension Cable - 20'	1128102
- 4-Ga. Wire in 4 Lengths	
- Use w/Service Truck Power Kit, 2-Way Plug and Jumper Cable Kit	
SEALED SMARTWIRE™ CONNECTION BETWEEN CABLES AND SERVICE TRUCK	**P/N**
Jumper Cable Kit	1128067
- 4-Ga. Wire, 12' Long	
- High-Quality, Insulated Cable Clamps	
- Use w/Service Truck Power Kit	
RUNS TARP SYSTEMS THAT ARE TYPICALLY OPERATED BY AN IN-CAB ROCKER SWITCH	**P/N**
Rotary Switch	1128410
- 6-Ga. Wire, 8' Length (4' Input, 4' Output)	
- Built-In High-Quality Reset Breaker	
LIGHT UP THE SCENE WITH A LITEALL™ LED FLOOD BEAM	**P/N**
Service Truck LED Work Light	1128324
- IP67 Waterproof Rating	
-1600 Lumens	
PLENTY OF ROOM FOR ALL KIT CHOICES LISTED ABOVE	**P/N**
Service Truck Accessories Bag	1128299

CONTROL MODULES

CONNECT TO YOUR SUPPLY VOLTAGE

These modules connect to supply voltage for smooth, seamless operation of your SMARTrailer™ accessories. When output is on, white output wire is connected to 12V; when off, it's grounded.

SAFETY LOCKOUT FEATURE

All modules except LiteALL™ have a safety lockout feature. While locked, outputs cannot be turned on using control box buttons. Safety lock is automatically disabled when using the remote. While locked, outputs cannot be turned on from the control box, but latching outputs can be turned off. To unlock, press and hold both box switches for one second.

EXTERNAL BOX SWITCHES

External box switches are used to pair the ShurLink™ remotes, PRO and EZR™, to the control box. Internal access is NOT required.

E-COMMERCE STORE

Search through our large selection of Genuine replacement parts, tarps, and more. Shop Shurco today!

LATCHING	P/N
ShurLink™ Control Module - Latching - On/Off w/Safety Lockout	1131658

- Conveyors: While output remains on, supplies 12V to customer-specific conveyor control solenoids.
- Tag Axles: Can supply 12V continuous signal to customer-specific electric-over-pneumatic solenoids.
- Pump Motors: Can supply 12V continuous signal to customer-specific pump motors or control solenoids.

MOMENTARY	P/N
ShurLink™ Control Module - Momentary - Up/Down	1131659
ShurLink™ Control Module - Momentary - Left/Right	1131660
ShurLink™ Control Module - Momentary - Extend/Retract	1131661

- Auger Conveyors: Stops/Starts conveyor movement in applications where preexisting controls require a momentary 12V "on" signal to start conveyor, then a sub-sequent momentary 12V "off" signal to stop it.
- Proportional Valves: Allows for momentary control of proportional valves (for speed control, for example).
- Auger Hydraulics: Allow for momentary control of electric-over-hydraulic auger positioning cylinders.

MOMENTARY	P/N
Shur-Link™ Control Module - Momentary - Open/Closed	1131662

- Proportional Valves: Allows for momentary control of proportional valves (for speed control, for example).
- Auger Hydraulics: Allow for momentary control of electric-over-hydraulic auger positioning cylinders.

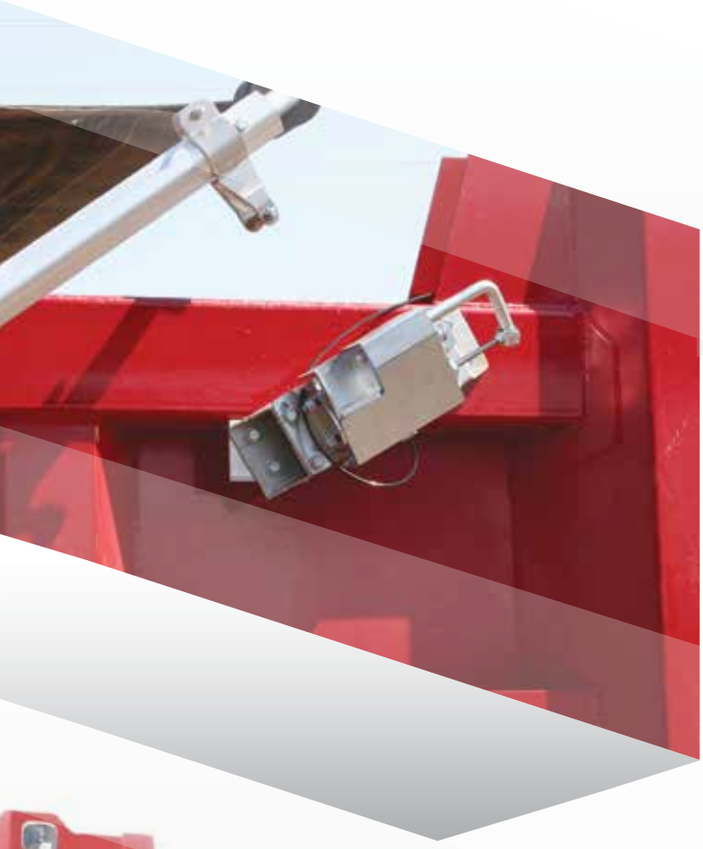

ARM-LOCK

KEY FEATURES

- Available for Dump Truck and Trailer Arm Systems
- All Pneumatic Hose and Hose Fittings are D.O.T. Approved
- Rated for Operation in Temperatures Down to -40° Fahrenheit
- Hose Fittings are Push to Connect Style Fittings with Pre-Applied Thread Sealant to Allow for Reliable and Quick Leak Free Hose Connections
- Locking Mechanisms Actuate Using High-Quality Cylinders
- Manual Release is Included if Needed
- Compact Locking Mechanisms Feature Heavy-Duty All Steel Construction with Adjustable Mounting Brackets
- Remote Operated Locking System Secures Rear when System is Closed — Reduces Bouncing of Arms and Roller Bars During Travel
- Available Arm-Lok™ Kit (Pneumatic) P/N: **1125250** for Trucks, P/N: **1125800** for Trailers.

MORE PRODUCT INFORMATION
Want to learn more? Simply scan to explore further details about the Arm-Lock™.

TENSION ARM & SPRING TRAP II

KEY FEATURES

- Automatically Deploys When Tarp is Covering the Load
- Stored Out of Loading Area When Tarp is in the Uncovered Position
- Closes the Gap between Cab Guard and Top of Box Creating Better Coverage or Your Load
- Reduces Chance of Wind Effecting the Tarp During Closing, Opening and Travel
- Prolonged Tarps Life by Limiting Air Movement Under the Tarp by Closing Gap between Cab Guard and Top of Box
- Available Tension Arm™ Kits P/N: **1120129** - 10' Arm, **1120130** - 12' Arm, **1120131** - 14' Arm
- Available Spring Trap™ II Hold-Down Kit P/N: **1128260** (See Below)

E-COMMERCE STORE
Search through our large selection of Genuine replacement parts, tarps, and more. Shop Shurco today!

4500

MOTOR

KEY FEATURES

- Direct-Drive Motor — No Chain-Driven Reduction
- Highly Reliable Magnetic Brake – No Electrical Energy is Used to Actuate Brake, There are No Electrical Connections to Misfire
- Durable All-Metal Gearbox
- 12-Volt Electrical Required
- Optimal Torque Rather than Increased Torque for Tarps
- Features High-Efficiency Planetary Gear Reduction
- 3-Year Warranty
- Available Motor P/N: **1120967**

APEX | IRONSIDE2

MOTOR

KEY FEATURES

- Direct-Drive Motor — No Chain-Driven Reduction
- Highly Reliable Magnetic Brake – No Electrical Energy is Used to Actuate Brake, There are No Electrical Connections to Misfire
- Optimal Torque Rather Than Increased Torque for Tarps
- 12-Volt Electrical Required
- Optimal Torque Rather Than Increased Torque for Tarps
- 3-Year Warranty
- Available Motor P/N: **1127091**

DURABUILT

MOTOR

KEY FEATURES

- 90:1 Gear Ratio Provides Extra Torque
- 100% Sealed Motor and Gear Casings
- Replaces All Competitors Motors & Fits Front-to-Rear Systems
- 100% Quality Control Tested
- All Motors Have a 3-Year Warranty
- Available Motor P/N: **1704878** 12-Volt, 900W, **1125700** 12-Volt, 900W, **1121307** 12-Volt, 900W

MORE PRODUCT INFORMATION

Want to learn more? Simply scan to explore further details about our DuraBuilt™ Motor.

PROTRAP 350

MOTOR

KEY FEATURES

- Direct-Drive Motor — No Chain-Driven Reduction
- 150 Low-Torque Motors Used with Strap-Style Tarps, 250 Motor for Rack-and Pinion Tarps, 350 Motor Available for Heavy-Duty Applications that Require Higher Torque
- Features High-Efficiency Planetary Gear Reduction
- Highly Reliable Magnetic Brake – No Electrical Energy is Used to Actuate Brake, There are No Electrical Connections to Misfire
- 12-Volt Electrical Required
- 3-Year Warranty
- Available Motor P/N: **1125713**

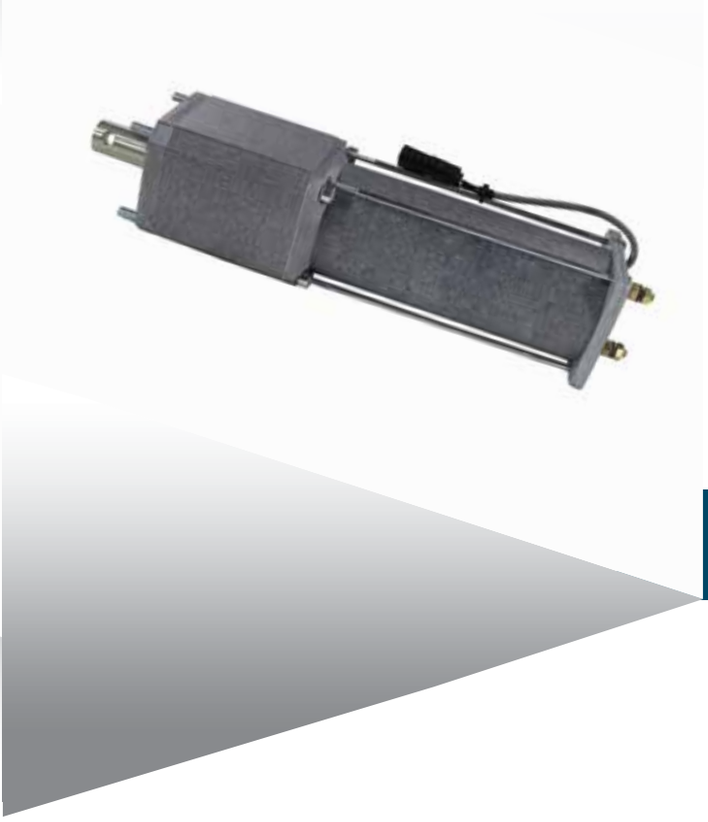

SHUR-TRAK HD

MOTOR

KEY FEATURES

- Durable All-Metal Gearbox
- Highly Reliable Magnetic Brake – No Electrical Energy is Used to Actuate Brake, There are No Electrical Connections to Misfire
- 12-Volt Electrical Required
- Higher Torque Output can Operate Cable Systems up to 45' in Length
- Features High-Efficiency Planetary Gear Reduction
- 3-Year Warranty
- Available Motor P/N: **1122442**

TARP REPAIR SUPPLIES

	DESCRIPTION	P/N
	Professional Tarp Repair Kit	*1108059
	Standard Tarp Repair Kit	*1102111
	Strip Kit w/Glue	1120613
	Tarp Repair Kit w/ Vinyl Tape - 6" X 10'	1128814
	Vinyl Patch Kit	1801724
	Handi Grommet Kit w/Grommets	1703251
1	Wooden Roller	1701391
2	2" x 3" Patch w/Radius Corners	1111869
3	3" x 4" Patch w/Radius Corners	1111870
4	4" x 5" Patch w/Radius Corners	1111871
5	3" Round Patch	1111872
6	Vinyl-Coated Tarp Remnant - Black	1128714
	Vinyl-Coated Tarp Remnant (specify color)	1107371
	Vinyl Repair Tape - 6" x 50' (not shown)	**1706352
7	HH-66 Thinner - Pint	1700697
8	HH-66 Thinner - Gallon	1700602
	HH-66 Vinyl Cement - 8 Oz.	**1700356
9	HH-66 Vinyl Cement - Pint	1801723
10	HH-66 Vinyl Cement - Quart	1700355
11	HH-66 Vinyl Cement - Gallon	1700354
	#3 Brass Grommet (minimum order 25)	**1700673

*Black tarp unless otherwise specified.
**Not shown in diagram.

PROFESSIONAL KIT

STANDARD KIT

GROMMET KIT

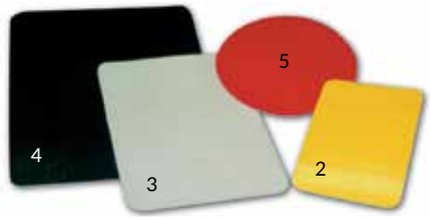

MORE PRODUCT INFORMATION
Scan the QR code for additional Mighty Mesh® product information.

E-COMMERCE STORE
Search through our large selection of Genuine replacement parts, tarps, and more. Shop Shurco today!

EPDM RUBBER STRAP | BETTER FOR HOT CLIMATES

DESCRIPTION	MAX STRETCH	CASE QTY	P/N
Natural Rubber Strap - 10"	15"	50	1702159
Natural Rubber Strap - 15"	23"	50	1702160
Natural Rubber Strap - 21"	32"	50	1702161
Natural Rubber Strap - 31"	47"	50	1702162
Natural Rubber Strap - 21"	62"	50	1702163

EPDM RUBBER STRAP | BETTER FOR COLD CLIMATES

DESCRIPTION	MAX STRETCH	CASE QTY	P/N
Natural Rubber Strap - 10"	15"	50	1700648
Natural Rubber Strap - 15"	23"	50	1700649
Natural Rubber Strap - 21"	32"	50	1700650
Natural Rubber Strap - 31"	47"	50	1700651

VINYL TARP

	STANDARD	PREMIUM COLORS: INCLUDE A 15% UP-CHARGE									
	BLACK	RED	WHITE	BLUE	GREEN	GRAY	MAROON	YELLOW	GRAPE	ORANGE	TAN
18-OZ. Vinyl	✓*	✓*	✓*	✓*	✓*	✓	✓	✓*	✓	**	CALL
22-OZ. Vinyl	✓*	✓	✓	✓	✓	✓	✓				CALL
CRXT	✓*	**		**							

*Available through any Shurco (US) location.
**Available only through Shurco Florida Location.

NOTE: Our fabric maintains consistent color year after year. However, we cannot guarantee an exact color match. Sometimes, variations in sheen can make the color appear slightly different. Please note that the colors shown may not exactly match the actual tarp color.

MESH TARP

MIGHTY MESH®

- Strongest Truck Tarp Material Available

KNITTED BLACK

- Rip Resistant

WHITE POLYESTER

- Ideal for Cold-Weather Applications

BLACK

- Heavy-Duty Mesh for Dump Trucks & Trailers

MULTI-COLOR PVC

- Industry Standard Truck Tarp Material

ASPHALT TARP

18-OZ. VINYL

- 13 Colors Available
- See Vinyl Materials List

ASPHALT LUMITE

- Lighter than Vinyl Materials

RFL

- Tough to Tear
- Ideal for Cold Weather

DONOPRENE

- Half the Weight of Vinyl Materials

AIR BAG

- Lighter than Vinyl Materials

TEMPERATURE RESISTANCE	
MESH TARP	
Mighty Mesh®	-40° to 172°F
Black	-40° to 172°F
Knitted Black	-40° to 172°F
Multi-Color PVC	-40° to 172°F
White Polyester	-40° to 172°F
ASPHALT TARP	
18-Oz. Vinyl	-30° to 176°F
Donoprene	-30° to 176°F
Asphalt Lumite	-40° to 325°F
Air Bag	-30° to 176°F
RFL	-40° to 325°F

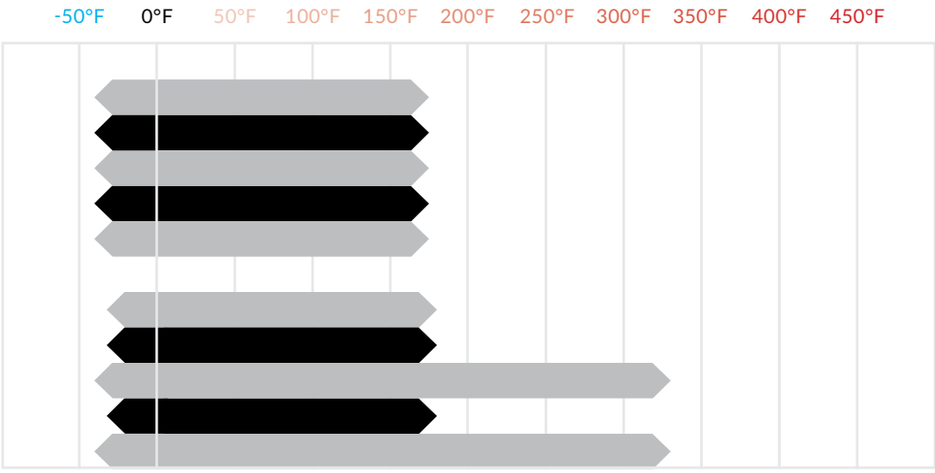

	SHURCO BRAND	P/N		MOUNTAIN TARP BRAND	P/N
1	Under body Hex Shaft Spring Kit - L	1119566	*VS*	Complete Hex Round Driver Side w/o Arm Connector	K0208
	Under body Hex Shaft Spring Kit - R	1119567	*VS*	Complete Hex Round Passenger Side w/o Arm Connector	K0207
2	Spring Retainer Weldment	1118955	*VS*	Hex Spring Retainer	K0193
3	Spring Shaft - 14.88"	1704480	*VS*	Hex Cold roll w/Clip	K0522C
4	Flange Bearing - 7/8" Hex	1704456	*VS*	Hex Flange Bear 7/8"	K0514H
5	Spring Pivot Connector w/Set Screw	1119112	*VS*	Arm Connector Hex	K0416N
6	Pillow Block Bearing - 1"	1119559	*VS*	Pillow Block Bearing 1" Round	K0520
7	Bearing Support Angle - 20"	1119330	*VS*	2" x 2" x 19" Aluminum C-Channel	15-12-0024
8	Spiral Torsion Spring	1111027	*VS*	Spiral Spring	K0199
9	4-Spring Pivot Assy - L	1119096	*VS*	Driver Side 4-Spring Assembly	K0260C
	4-Spring Pivot Assy - R	1119097	*VS*	Pass Side 4-Spring Assembly	K0261C
10	4-Spring Pivot Connector	1704474	*VS*	4-Spring Arm Plug Only	K0134A
11	4-Spring Pivot Bracket	1119098	*VS*	4-Spring Mounting Bracket	K0256
12	5-Spring Pivot Assy - L	1119105	*VS*	5-Spring Assembly Driver Side	K0260
	5-Spring Pivot Assy - R	1119106	*VS*	5-Spring Assembly Passenger Side	K0261
13	5-Spring Pivot Connector	1118950	*VS*	5-Spring Arm Plug (Welded Arm)	K0134
14	Pivot Bracket - Sloped - Gate Flex™	1116994	*VS*	5-Spring Mounting Bracket	K0257

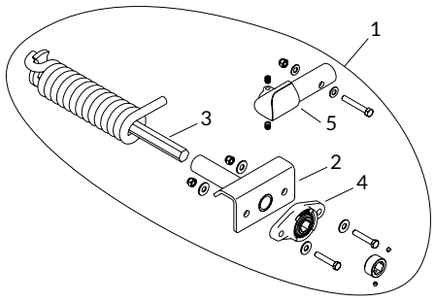

Arm-Matic™ Spring Assemblies - Underbody Hex Shaft

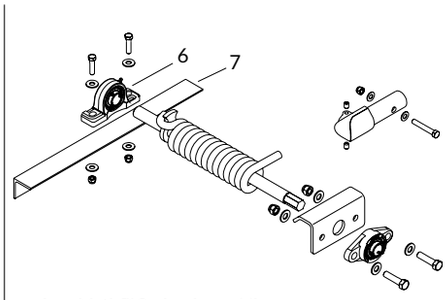

Arm-Matic™ Spring Assemblies - Underbody Hex/Round Shaft

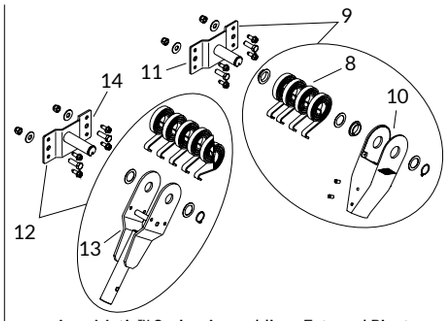

Arm-Matic™ Spring Assemblies - External Pivot

	SHURCO BRAND	P/N		MOUNTAIN TARP BRAND	P/N
1	Drop Plate	1119107	*VS*	Drop Plate Cast Alum. Each	K0188
2	Under rail Spring Kit - Hex/Round Shaft - L	1120231	*VS*	Complete Hex Round Under rail Driver w/ Arm Connector	K0269HRA
	Under rail Spring Kit - Hex/Round Shaft - R	1120232	*VS*	Complete Hex Round Under rail Passenger w/Arm Connector	K0270HRA
3	Spring Hanger Plate	1119110	*VS*	Drop Plate Steel	K0192
4	Torsion Spring 15-Coil - L	1704476	*VS*	5/8" Torsion Spring Driver	K0501
	Torsion Spring 15-Coil - R	1704477	*VS*	5/8" Torsion Spring Passenger	K0502

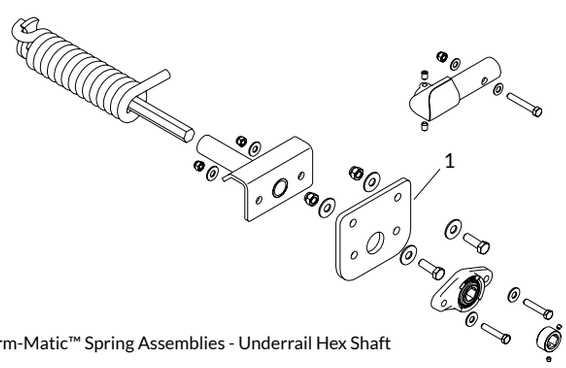

Arm-Matic™ Spring Assemblies - Underrail Hex Shaft

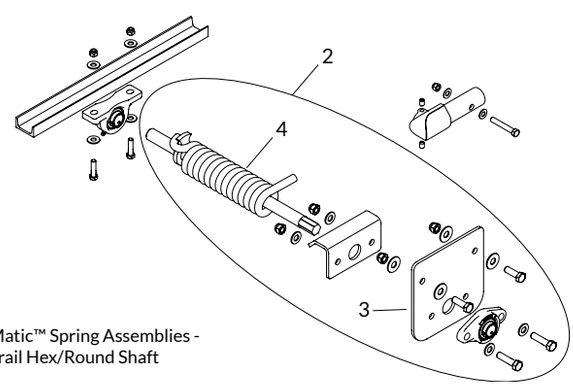

Arm-Matic™ Spring Assemblies - Underrail Hex/Round Shaft

	SHURCO BRAND	P/N		MOUNTAIN TARP BRAND	P/N
1	Alum Return Arm - 12' w/2' Bend	1704466	*VS*	12' Aluminum Tarp Arm	K0407B
	Alum Return Arm - 14' w/2' Bend	1704467	*VS*	14' Aluminum Tarp Arm w/ Bend	K0409B
	Alum Return Arm - 20'	1704488	*VS*	20' Straight Aluminum Tarp Arm	K0414E
2	Tarp Tube Crossover Kit	1125416	*VS*	Crossover Bar 102" for 96" Body	K0420
	No Option Found		*VS*	Crossover Bar 108" for 102"	K0422
2a	Rear Cross Piece	*1800300	*VS*	No Option Found	
2b	Cast Elbow - 90°	*1800597	*VS*	No Option Found	
3	Rubber Bumper - 3-1/4" x 4-1/2"	1704458	*VS*	6" Rubber Bumper	K0420D

*Flash™ Arm Assemblies

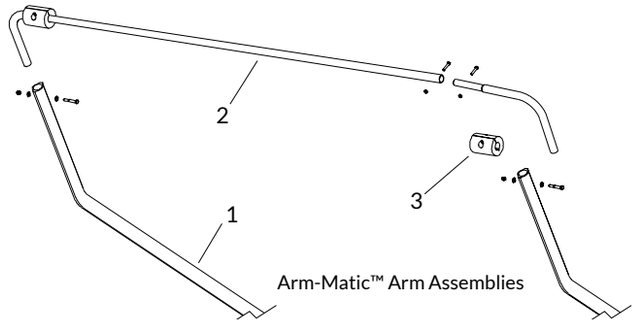

Arm-Matic™ Arm Assemblies

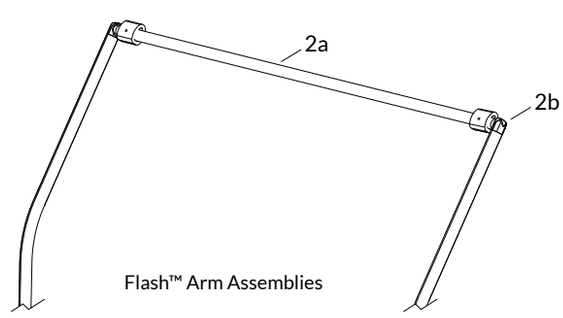

Flash™ Arm Assemblies

	SHURCO BRAND	P/N		MOUNTAIN TARP BRAND	P/N
1	Direct-Drive Motor - 900 Watt - 12V	1704878	*VS*	90:1 1.3HP Motor w/Cover	K0170TS
	Direct-Drive Motor - 600 Watt - 12V	1802061	*VS*	Chrome Motor Cover	K0170CMC
	Direct-Drive Motor - 600 Watt - 12V	1802066	*VS*	60:1 1.1HP Motor w/Cover	K0170S
2	Motor Cover - Chrome - 1 PC.	*1811884	*VS*	60:1 1.1HP Motor w/Cover	K0170S
	Motor Cover - Chrome - 1 PC.	**1801585	*VS*	Chrome Motor Cover	K0170CMC
3	Threaded Tarp Axle w/Hole	1114961	*VS*	1-Piece Tarp Axle 96"	K0174
4	Windshield w/Side Plates Kit - 98"	1120267	*VS*	3-Piece Wind Deflector & End Plates	K0703A
5	Radial Ball Bearing w/Flanges	1703374	*VS*	3/4" Bore, 3 Piece Bearing	K0187
6	Alum Tarp Housing - 98"	1119083	*VS*	Housing Shell Only - 96"	K0101SS
	Alum Tarp Housing - 104"	1119089	*VS*	Housing Shell Only - 102"	K0102SS
7	Manual Crank Relocator Kit	1120350		Manual Backup Kit	K0163

*Fits motor 1704878.
**Fits motor 1802061 and 1802066.

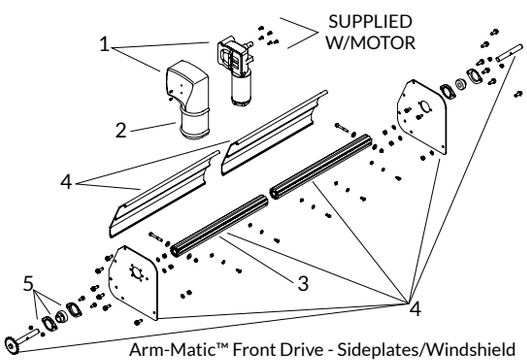

Arm-Matic™ Front Drive - Sideplates/Windshield

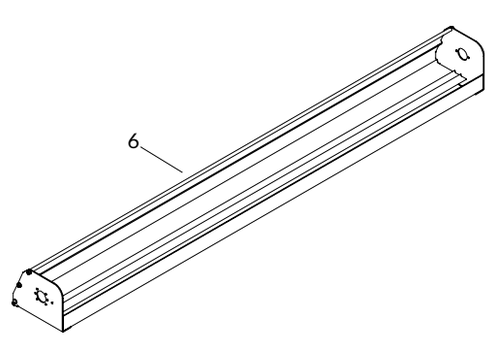

Arm-Matic™ Front Drive - Housing/Support Brackets

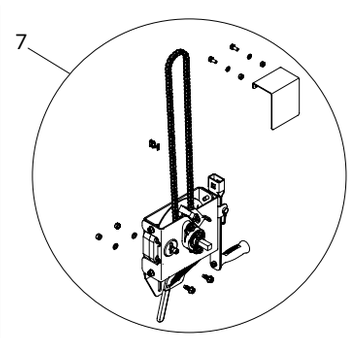

Arm-Matic™ Crank Relocators

	SHURCO BRAND	P/N		MOUNTAIN TARP BRAND	P/N
1	Elec. Parts Kit w/Rocker - 50 Amp Modified	1116271	*VS*	Rocker & Solenoid Assembly	K0176Q
2	Dual-Cond Wire - 6 Ga. (per foot)	1703822	*VS*	6-Ga. Wire Per Foot	K0146
3	Electrical Wire - 3 Strand 14 Ga. - 15'	1116482	*VS*	No Option Found	
4	Motor-Rev Solenoid 12V - 2 Pt Mnt - Black Wire	1703845	*VS*	Solenoid Module	K0176M
5	Rocker Switch	1116020	*VS*	Rocker Switch Only	K0176SO
6	Rocker Switch Mtg Bracket	1703661	*VS*	Rocket Switch Bracket	K0176RSB
7	Dual-Connector Kit - Horiz. Pin - L Brkt	1123050	*VS*	Phillips Horizontal 2 Prong Disconnect	K0173
	Dual-Connector Kit - Vert Pin - L Brkt	1109016	*VS*	Phillips Vertical 2 Prong Disconnect	1266

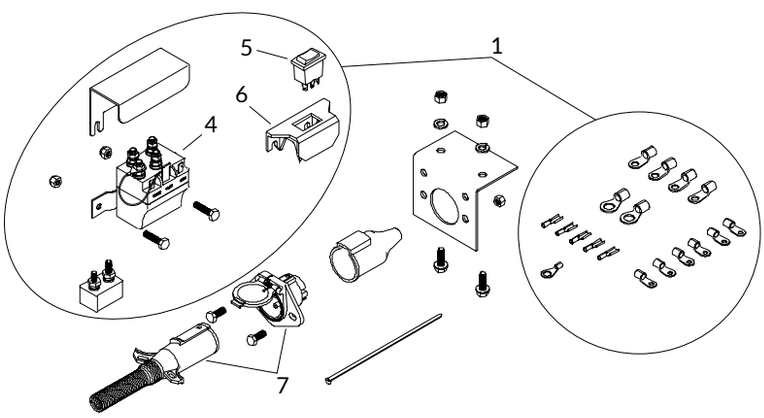

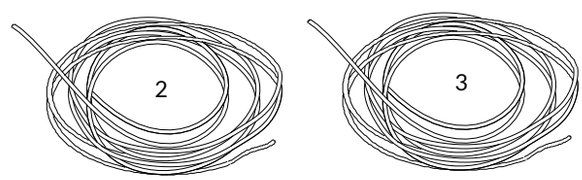

Arm-Matic™ Rocker Switch Wiring

NOTE: Any use of competitor names, trademarks, model number, item number or part number is for reference purposes only.

CABLES

	SHURCO BRAND	P/N		AGRI-COVER BRAND	P/N
1	Stainless Cable - 139"	1705280	*VS*	Cable 139" Stainless Steel (48-103" wide box)	10941
	Galvanized Cable - 139"	1704295	*VS*	Cable 139" (48-103" wide box)	10940
	Galvanized Cable - 151"	1704294	*VS*	Cable 151" (104-120" wide box)	10939
	Galvanized Cable - 175"	1704514	*VS*	Cable 172" (121-144" wide box)	10938

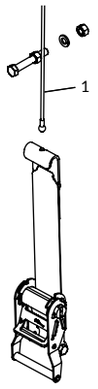

CARTRIDGES

	SHURCO BRAND	P/N		AGRI-COVER BRAND	P/N
1	Cartridge Spacer	1118228	*VS*	1” PVC Cartridge Spacer	10734
2	Rear Cartridge Assy - 15" Red	1123953	*VS*	15” Right Cart. w/ Clamp Kit (red powder coated)	40835
3	Front Cartridge Assy - 15" Black	1123952	*VS*	15” Left Cart. w/ Clamp Kit (black powder coated)	40812

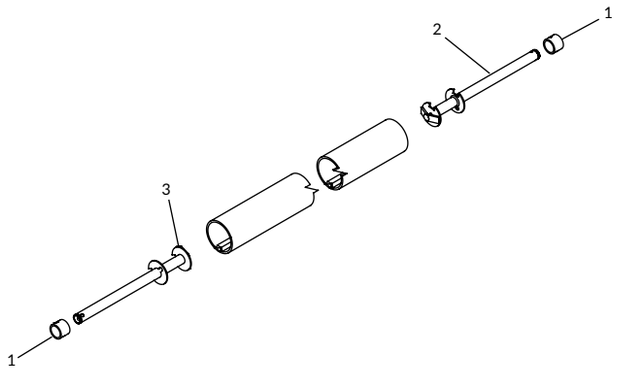

CRANK ARMS

	SHURCO BRAND	P/N		AGRI-COVER BRAND	P/N
1	Galv Telescoping Crank w/Flex Jnt - 4'9" to 7'10"	1123809	VS	Alum Short Crank Handle w/ Flex Drive Kit (5’ 3” extends to 7’ 11”)	4000930
	Galv Telescoping Crank w/Flex Jnt - 6'1" to 9'4"	1123813	VS	Alum Long Crank Handle w/ Flex Drive Kit (7’ 5” extends to 12’ 4”)	4000931
	Galv Telescoping Crank w/Flex Jnt - 8'3" to 11'6"	1123817	VS	Alum XL Crank Handle w/ Flex Drive Kit (8’ 8” extends to 13’ 7”)	4000932
	Galv Telescoping Crank w/Flex Jnt - 9'7" to 12'10"	1123821	VS	Alum XXL Crank Handle w/ Flex Drive Kit (10’ 1” extends to 17’ 9”)	4000933
	SS Telescoping Crank w/Flex Jnt - 4'9" to 7'10"	1123811	VS	No Option Found	
	SS Telescoping Crank w/Flex Jnt - 6'1" to 9'4"	1123815	VS	No Option Found	
	SS Telescoping Crank w/Flex Jnt - 8'3" to 11'6"	1123819	VS	No Option Found	
	SS Telescoping Crank w/Flex Jnt - 9'7" to 12'10"	1123823	VS	No Option Found	
2	Galv Telescoping Crank - 4'9" to 7'10"	1123810	VS	Alum Short Crank Handle Kit (4’ extends to 6’ 8”)	4000923
	Galv Telescoping Crank - 6'1" to 9'4"	1123814	VS	Alum Long Crank Handle Kit (6’ 2” extends to 11’ 1”)	4000924
	Galv Telescoping Crank - 8'3" to 11'6"	1123818	VS	Alum XL Crank Handle Kit (7’ 5” extends to 12’ 4”)	4000925
	Galv Telescoping Crank - 9'7" to 12'10"	1123822	VS	Alum XXL Crank Handle Kit (8’ 10” extends to 16’ 6”)	4000926
	SS Telescoping Crank - 4'-9" to 7'10"	1123812	VS	No Option Found	
	SS Telescoping Crank - 6'1" to 9'4"	1123816	VS	No Option Found	
	SS Telescoping Crank - 8'3" to 11'6"	1123820	VS	No Option Found	
	SS Telescoping Crank - 9'7" to 12'10"	1123824	VS	No Option Found	
3	Flex Arm Joint Assy - 12"	1118722	VS	Flex Drive	60937

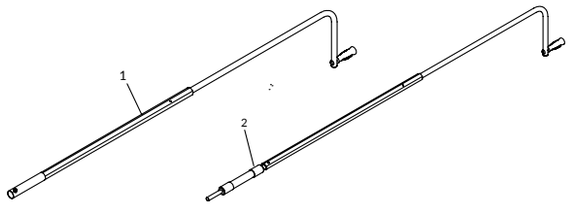

RATCHETS/STRAPS

	SHURCO BRAND	P/N		AGRI-COVER BRAND	P/N
	Ratchet Strap Assy - 18" X 1"	1129609	VS	No Option Found	
	Stainless Ratchet Strap Assy - 18" x 1"	1122608	VS	No Option Found	
	Ratchet Strap Assy - 42" X 1"	1129610	VS	Ratchet Kit (1” W strap)	80039
	Stainless Ratchet Strap Assy - 42" x 1"	1122793	VS	Ratchet Kit (1” W strap) (stainless steel)	80043
1	Ratchet Strap - 18" X 1"	1129611	VS	Ratchet Strap w/ Hook (1” W x 19” L)	70983
	Stainless Ratchet Strap - 18" x 1"	1122609	VS	Ratchet Strap w/ Hook (1” W x 19” L) (stainless steel)	70989
	Ratchet Strap - 42" X 1"	1129612	VS	Ratchet Strap w/ Hook (1” W x 43” L)	90432
	Stainless Ratchet Strap - 42" x 1"	1122794	VS	Ratchet Strap w/ Hook (1” W x 43” L) (stainless steel)	90434
2	Ratchet Handle - 1"	1706493	VS	Tie-Down Ratchet (1” W strap)	70995
	Stainless Ratchet Handle - 1"	1705066	VS	Tie-Down Ratchet (1” W strap) (stainless steel)	70515
3	Adjustable Ratchet Bracket	1129613	VS	Ratchet Bracket (1” W strap)	4001024
	Stainless Adjustable Ratchet Bracket	1122610		Ratchet Bracket (1” W strap) (stainless steel)	4001026

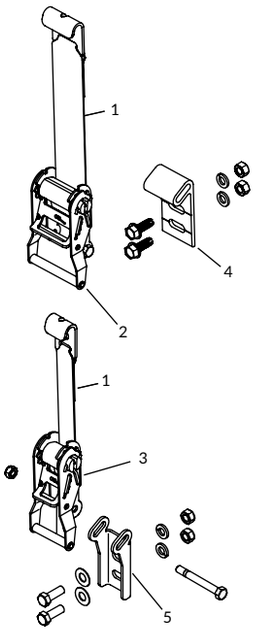

RETAINERS

	SHURCO BRAND	P/N		AGRI-COVER BRAND	P/N
	Telescoping Crank Retainer Kit	1123756	*VS*	Nylon Swivel Handle Holder w/ Pin Kit	4004735
	Stainless Telescoping Crank Retainer Kit	1123905	*VS*	Nylon Swivel Handle Holder w/ Pin Kit	4004735
1	Stainless Snaplock Retainer	1130839	*VS*	Nylon Swivel Handle Holder	4003646

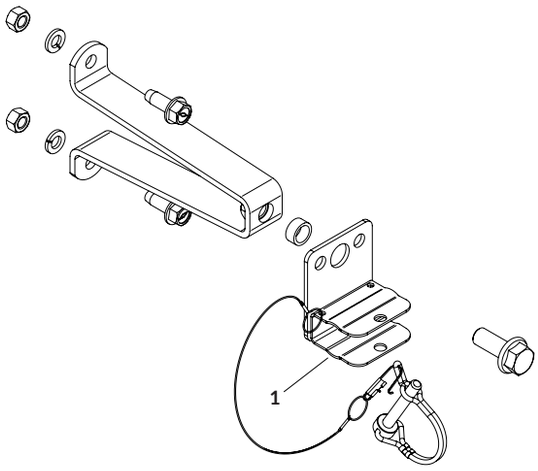

RIDGE STRAPS

SHURCO BRAND	P/N		AGRI-COVER BRAND	P/N
Ridge Strap Kit w/Hook - 1" x 10'	1118521	*VS*	Ridge Strap Kit (up to 10' long box)	50414
Ridge Strap Kit w/Hook - 1" x 14'	1118523	*VS*	Ridge Strap Kit (up to 14' long box)	30769
Ridge Strap Kit w/Hook - 1" x 18'	1121405	*VS*	Ridge Strap Kit (up to 18' long box)	30683
Ridge Strap Kit w/Hook - 1" x 24'	1118525	*VS*	Ridge Strap Kit (up to 24' long box)	30845
Stainless Ridge Strap Kit w/Hook - 1" x 10'	1120301	*VS*	Ridge Strap Kit (up to 10' long box) (stainless steel)	50428
Stainless Ridge Strap Kit w/Hook - 1" x 14'	1120302	*VS*	Ridge Strap Kit (up to 12' long box) (stainless steel)	40962
Stainless Ridge Strap Kit w/Hook - 1" x 18'	1121407	*VS*	Ridge Strap Kit (up to 18' long box) (stainless steel)	40963
Stainless Ridge Strap Kit w/Hook - 1" x 24'	1121409	*VS*	Ridge Strap Kit (up to 24' long box) (stainless steel)	50008

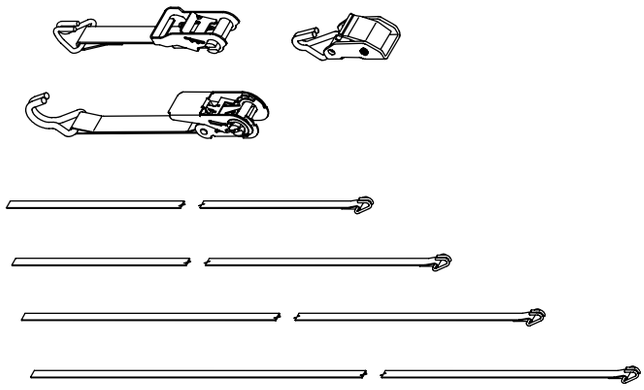

SPOOLS

	SHURCO BRAND	P/N		AGRI-COVER BRAND	P/N
1	Rear Cable Spool - 3" R	1704373	*VS*	No Option Found	
	Rear Cable Spool - 3-1/2" R	1704436	*VS*	3-1/2" Right Spool ("R" mark)	4000226
2	O-Ring Seal Kit (Includes 2 O-Rings)	1123955	*VS*	No Option Found	
3	Rear Spring - Red	1118229	*VS*	Right Spring (red powder coated)	40982
	Front Spring - Black	1118230	*VS*	Left Spring (black powder coated)	40983
4	Front Cable Spool - 3" L	1704372	*VS*	No Option Found	
	Front Cable Spool - 3-1/2" L	1704435	*VS*	3-1/2" Left Spool ("L" mark)	4000225

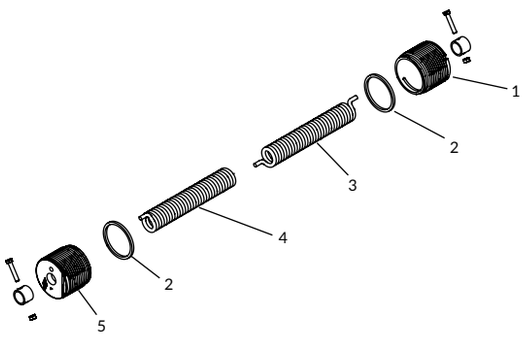

TARP STOPS

	SHURCO BRAND	P/N		AGRI-COVER BRAND	P/N
	EOF Alum Tarp Stop w/Hdw	1124780	*VS*	Universal Quick Release Aluminum Tarp Stop (tall)	60566
	EOF Alum 6" Offset Tarp Stop w/Hdw	1124783	*VS*	No Option Found	
	EOF Flexible Tarp Stop w/Hdw	1114047	*VS*	Universal Quick Release Flexible Tarp Stop (tall)	4006797
	EOF Flexible 6" Offset Tarp Stop w/Hdw	1114388	*VS*	Universal Quick Release Flexible Tarp Stop (6” offset)	4006800
1	EOF Belt Flex Tarp Stop w/Hdw	1122278	*VS*	Universal Quick Release Belted Tarp Stop	4008336
2	EOF Alum Tarp Stop Upright	1705775	*VS*	Universal Quick Release Cast Aluminum Upright (tall)	60670
3	EOF Alum 6" Offset Tarp Stop Upright	1705454	*VS*	Universal Quick Release Cast Aluminum Upright (6” offset)	60677
4	EOF Flexible Tarp Stop Upright	1115216	*VS*	Universal Quick Release Flexible Upright (tall)	4006796
5	EOF Flexible 6" Offset Tarp Stop Upright	1115217	*VS*	Universal Quick Release Flexible Upright (6” offset)	4006799
6	EOF Belt Flex 6" Offset Tarp Stop Upright	1123455	*VS*	Universal Quick Release Belted Upright	4008319
7	EOF Tarp Stop Body	1100833	*VS*	Universal Quick Release Base (silver powder coated)	60471
8	Clevis Pin - 5/16" x 2-7/8"	1703604	*VS*	5/16” x 3” Zinc Plated Clevis Pin	10892
9	Bowtie Cotter Pin - 1-3/8"	1704380	*VS*	5/8” x 1-3/8” Zinc Plated Bow-Tie Pin	60036
10	Tarp Stop Bracket	1100814	*VS*	Tarp Stop Bracket (2-1/8” depth) (black powder coated)	70975

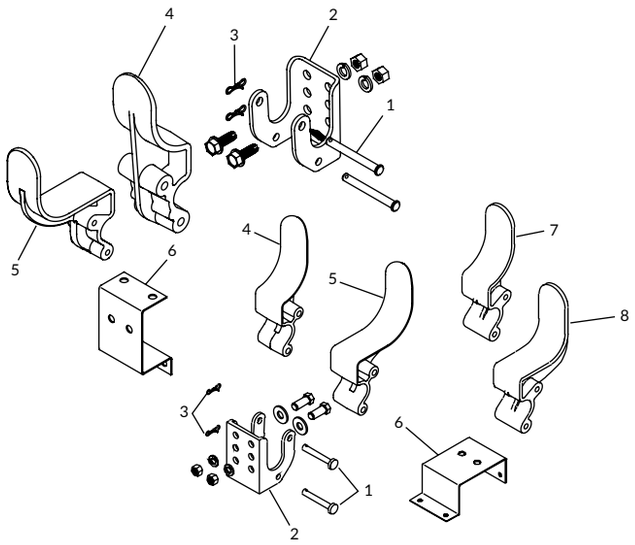

ROLL TUBES

	SHURCO BRAND	P/N		AGRI-COVER BRAND	P/N
1	Alum Roll Tube - 3" x 12'	1118639	*VS*	11’ 9” (141”) Roll Tube (3” dia.) (alum.)	HC1410
	Alum Roll Tube - 3" x 16'	1704439	*VS*	16’ (192”) Roll Tube (3” dia.) (alum.)	HC1920
	Alum Roll Tube - 3" x 20'	1704398	*VS*	20’ (240”) Roll Tube (3” dia.) (alum.)	HC2400
	Alum Roll Tube - 3" x 24'	1704236	*VS*	24’ (288”) Roll Tube (3” dia.) (alum.)	HC2880
	Alum Roll Tube - 3" x 27'	1705770	*VS*	27’ (324”) Roll Tube (3” dia.) (alum.)	HC3240
2	Alum Splice Tube - 3"	1704863	*VS*	24” Roll Tube Splice (3” dia.) (alum.)	50064

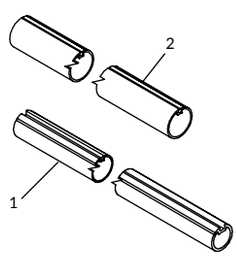

ELECTRICS

SHURCO BRAND	P/N		AGRI-COVER BRAND	P/N
Durabuilt™ Motor w/Cover - 2-1/8" Shaft	1121307	VS	12V Motor & Worm Gear w/ Cover (SRT-2)	50676
Motor Cover - Chrome - 1 PC.	1811884	VS	Tarp Motor Cover Kit	90161
Motor Extension - Black	1118221	VS	Motor Extension Shaft (14” powder coated) (SRT-2)	10333
Upper Pivot Arm - Durabuilt™	1118224	VS	Upper Pivot Arm w/ Motor Mount (30” long)	10774
Lower Pivot Arm - 60"	1129986	VS	Lower Pivot Arm (60” long)	30638
Stainless Lower Pivot Arm - 60"	1127979	VS	Lower Pivot Arm (60” long) (stainless steel)	40989
Lower Pivot Arm - 80"	1114954	VS	Lower Pivot Arm (95” long)	60666
Stainless Lower Pivot Arm - 80"	1115558	VS	No Option Found	
Swing Arm Hdw - Durabuilt™	1130435	VS	Pivot Mount Hardware Kit	40926
Stainless Swing Arm Hdw - Durabuilt™	1126495	VS	Pivot Mount Hardware Kit (stainless steel)	30643
Dual-Cond Wire - 6 Ga. - 30'	1118495	VS	2 Strand 6 Ga. Wire (30 ft.)	10773
Dual-Cond Wire - 6 Ga. - 75'	1108102	VS	2 Strand 6 Ga. Wire (75 ft.)	10770
40-Amp Modified-Reset Circuit Breaker	1704354	VS	12V 40 Amp Automatic Circuit Breaker	10739
Circuit Breaker Boot - Red	1704411	VS	Red Breaker Cover	30648
Rocker Switch	1116020	VS	12V Rocker Switch	40649
Rocker Switch Mtg Bracket	1703661	VS	Toggle Switch Mounting Bracket	40673
Motor-Rev Solenoid 12V - 2 Pt Mnt - Black Wire	1703845	VS	12V Motor Reversing Solenoid w/ Jumper Wire	70498

REPLACEMENT PARTS

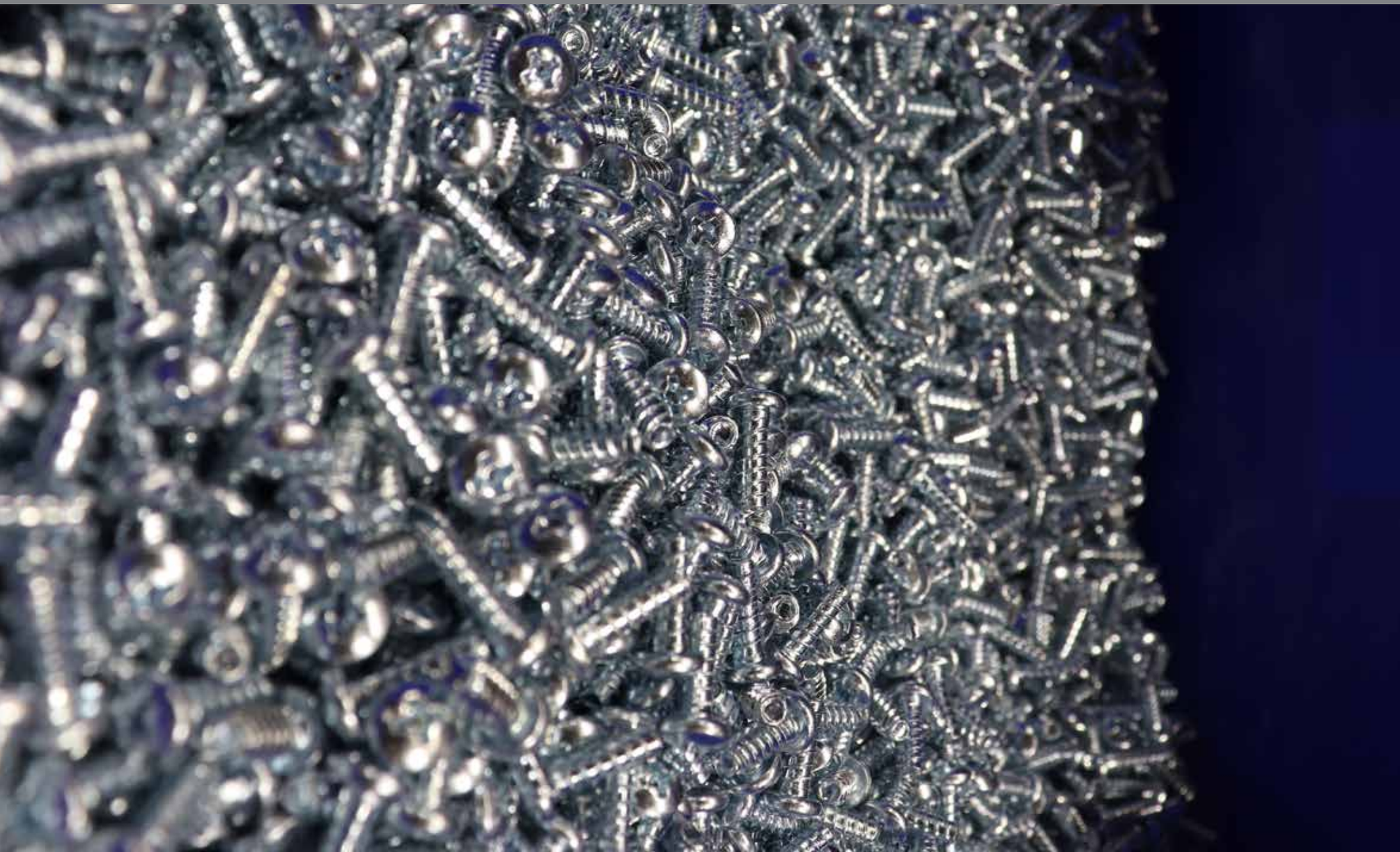

TABLE OF CONTENTS

REPLACEMENT PARTS

Shur-Lok® | Belt 'N Ratchet 82
Cable-Lok™ 101
Electric Components 106
Cable-Lok™ Electric 110
4500 Series HD 111
APEX™ 119
IronSide2™ 122
Shur-Trak™ II 125
Arm-Matic™ 136
Flash™ 139
Arm-Matic™ | Flash™ 143
Bullet™ 145
Hammer™ II 146
5000X 148
2000SR 152
DuraPull™ 153

DISCONTINUED REPLACEMENT PARTS

SMART3™ 155
IronSide™ 156
CoverPro® 159
CoverPro® II 160

THINGS TO NOTE IN REPLACEMENT PARTS

FEES
All components other than standard may require a non-refundable $100 special processing fee. Call for details.
BOWS
Bow rise is typically 2" greater than rise of cap. Other rises available.
CAPS
Cap rise is typically 2" less than rise of bow. Other rises available.
Mounting hardware NOT included with end caps.

BOW COVERS

	DESCRIPTION	P/N
1	Bow Sock - 40oz Vinyl	1111335

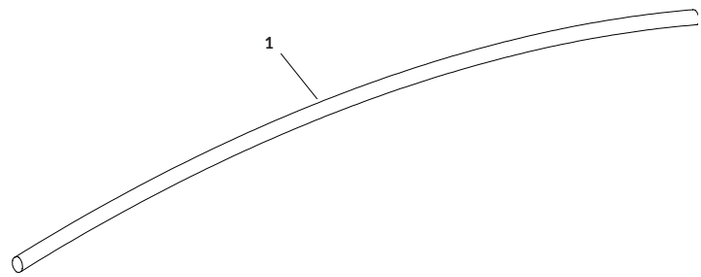

BOWS - ADJUSTABLE GALVANIZED

	DESCRIPTION	P/N
	KITS & HARDWARE	
	Adj. Galv. Bow Kit - 8" Rise - 84" to 92" [Includes: A; 1; 2; 2 of 3]	1122754
	Adj. Galv. Bow Kit - 8" Rise - 93" to 101" [Includes: A; 1; 2; 2 of 3]	1122756
	Adj. Galv. Bow Kit - 10" Rise - 84" to 92" [Includes: A; 1; 2; 2 of 3]	1122724
	Adj. Galv. Bow Kit - 10" Rise - 93" to 101" [Includes: A; 1; 2; 2 of 3]	1122757
	Adj. Galv. Bow Kit - 12" Rise - 84" to 92" [Includes: A; 1; 2; 2 of 3]	1122755
	Adj. Galv. Bow Kit - 12" Rise - 93" to 101" [Includes: A; 1; 2; 2 of 3]	1122758
	Adj. Galv. Bow w/Shank - 8" Rise - 84" to 92" [Includes: 1; 2]	1123932
	Adj. Galv. Bow w/Shank - 8" Rise - 93" to 101" [Includes: 1; 2]	1123934
	Adj. Galv. Bow w/Shank - 10" Rise - 84" to 92" [Includes: 1; 2]	1122719
	Adj. Galv. Bow w/Shank - 10" Rise - 93" to 101" [Includes: 1; 2]	1122825
	Adj. Galv. Bow w/Shank - 12" Rise - 84" to 92" [Includes: 1; 2]	1123933
	Adj. Galv. Bow w/Shank - 12" Rise - 93" to 101" [Includes: 1; 2]	1123935
	Adj. Bow Shank & Bracket Kit - 8" Rise [Includes: A; 2; 2 of 3]	1123871
	Adj. Bow Shank & Bracket Kit - 12" Rise [Includes: A; 2; 2 of 3]	1123872
A	Mounting Fasteners (4)	1107711
	PARTS	
1	Adj. Galv. Bow - 8" Rise - 84" to 92"	1122759
	Adj. Galv. Bow - 8" Rise - 93" to 101"	1122818
	Adj. Galv. Bow - 10" Rise - 84" to 92"	1122627
	Adj. Galv. Bow - 10" Rise - 93" to 101"	1122819
	Adj. Galv. Bow - 12" Rise - 84" to 92"	1122817
	Adj. Galv. Bow - 12" Rise - 93" to 101"	1122820
2	Galv. Bow Long Shank - 8" Rise	1122821
	Galv. Bow Long Shank - 10" Rise	1122626
	Galv. Bow Long Shank - 12" Rise	1122822
3	Single Bow Bracket	1120836
4	Self-Tapping Screw - 3/8" x 1"	1700400
5	Lock Washer - 3/8"	1700434
6	Hex Nut - 3/8"	1700407

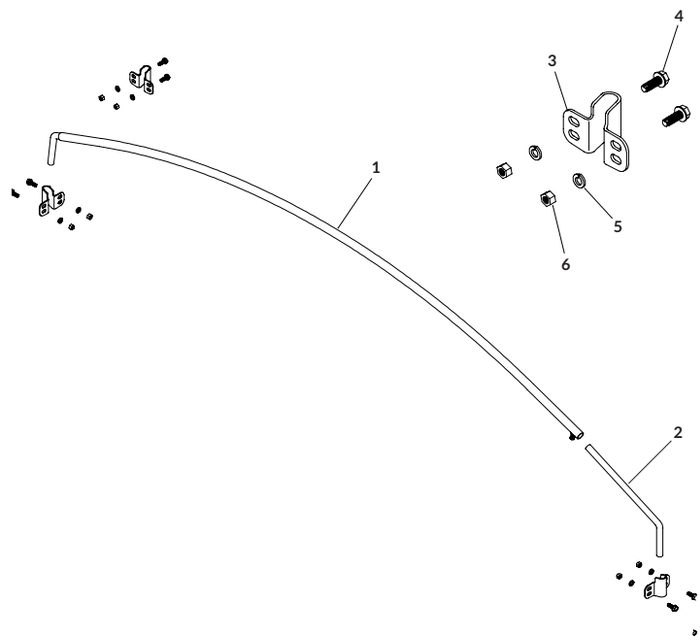

Table of Contents

Replacement Parts

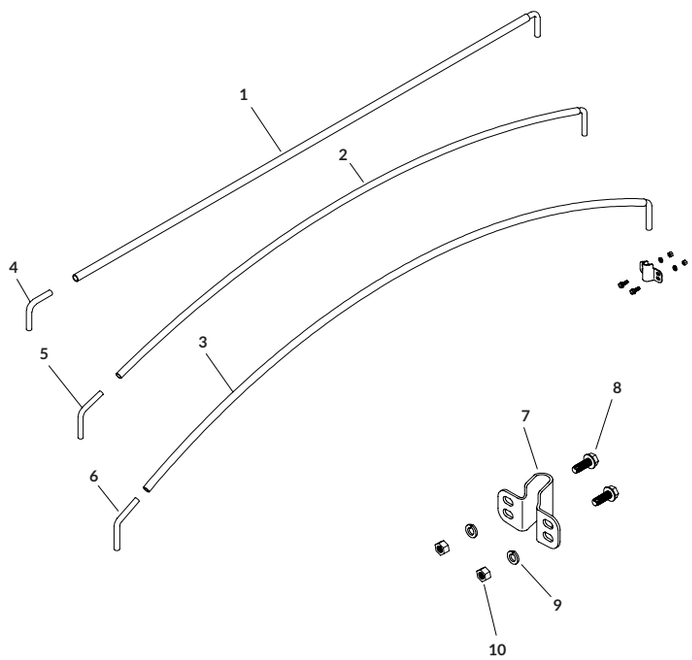

BOWS - STANDARD GALVANIZED

	DESCRIPTION	P/N
	KITS & HARDWARE	
	Galv. Bow Kit - Flat - 89" to 102" [Includes: A; 1; 4; 2 of 7]	1111781
	Galv. Bow Kit - 8" Rise - 78" to 84" [Includes: A; 2; 5; 2 of 7]	1117915
	Galv. Bow Kit - 8" Rise - 85" to 92" [Includes: A; 2; 5; 2 of 7]	1117916
	Galv. Bow Kit - 8" Rise - 93" to 102" [Includes: A; 2; 5; 2 of 7]	1100766
	Galv. Bow Kit - 12" Rise - 89" to 95" [Includes: A; 3; 6; 2 of 7]	1117917
	Galv. Bow Kit - 12" Rise - 96" to 102" [Includes: A; 3; 6; 2 of 7]	1100768
	Galv. Bow Shank & Bracket Kit - Flat [Includes: A; 4; 2 of 7]	1111782
	Galv. Bow Shank & Bracket Kit - 8" Rise [Includes: A; 5; 2 of 7]	1101608
	Galv. Bow Shank & Bracket Kit - 12" Rise {Includes: A; 6; 2 of 7]	1106968
A	Mounting Fasteners (4) [Includes: 4 of 8, 9 & 10]	1107711
	PARTS	
1	Galv. Bow - Flat - 89" to 102"	1109149
2	Galv. Bow - 8" Rise - 78" to 84"	1117904
	Galv. Bow - 8" Rise - 85" to 92"	1116120
	Galv. Bow - 8" Rise - 93" to 102"	1100760
3	Galv. Bow - 12" Rise - 89" to 95"	1117905
	Galv. Bow - 12" Rise - 96" to 102"	1100762
4	Galv. Bow Shank - Flat	1109150
5	Galv. Bow Shank - 8" Rise	1100695
6	Galv. Bow Shank - 12" Rise	1106925
7	Single Bow Bracket	1120836
8	Self-Tapping Screw - 3/8" x 1"	1700400
9	Lock Washer - 3/8"	1700434
10	Hex Nut - 3/8"	1700407

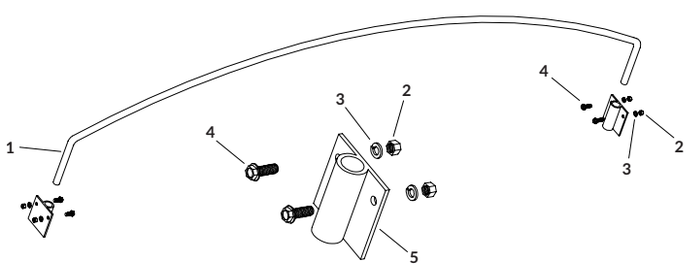

BOWS - ALUMINUM

	DESCRIPTION	P/N
	PARTS	
1	Solid Alum. Bow - 8" Rise	
	Solid Alum. Bow - 12" Rise	
2	Hex Nut - 3/8"	1700407
3	Lock Washer - 3/8"	1700434
4	Self-Tapping Screw - 3/8" x 1"	1700400
5	Alum. Bow Bracket	1109110

Table of Contents

Replacement Parts

BOWS - DURABOWS™

	DESCRIPTION	P/N
	KITS & HARDWARE	
	Durabow™ Bow Kit - 97" - Steel [Includes: A; 2; 2 of 3]	1123544
	Durabow™ Bow Kit - 102" - Steel [Includes: A; 2; 2 of 3]	1123541
	Durabow™ Bow Kit - 97" - Alum. [Includes: A; 2; 2 of 4]	1123545
	Durabow™ Bow Kit - 102" - Alum. [Includes: A; 2; 2 of 4]	1123542
	Bow Bracket Kit - Durabow™ - Steel [Includes: A; 2 of 3]	1110653
	Bow Bracket Kit - Durabow™ - Alum. [Inlcudes: A; 2 of 4]	1124624
A	Bow Mtg. Hdw. - Durabow™ [Includes: 8 of 1]	1115971
	PARTS	
1	Self-Tapping Screw - 3/8" x 1"	1700400
2	Durabow™ - 97"	1705128
	Durabow™ - 102"	1705129
	Replacement Flexbow®	*1702857
3	Durabow™ Bracket - Steel	*1122932
4	Durabow™ Bracket - Alum	1705324

*Durabow™ steel brackets are a fit-all bracket for both Flexbow® and Durabow™. Original steel Flexbow® brackets are zinc plated; steel Durabow™ brackets are yellow plated. Durabows will NOT slide into original Flexbow® steel brackets. When ordering P/N 1702857 replacement Flexbow®, please order P/N 1123544 or P/N 1123541 Durabow™ bow kits, which include Durabow™ steel brackets.

NOTE: Durabows are NOT recommended for low-rise applications.

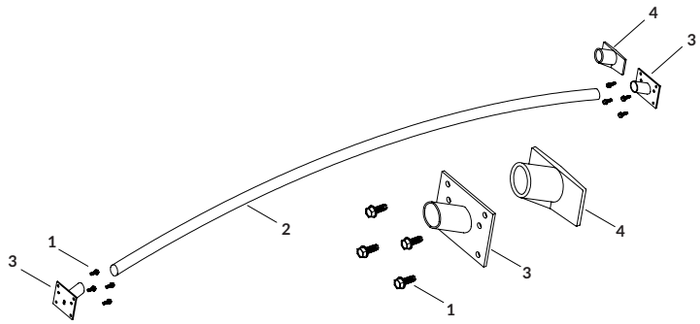

BOWS - HEAVY-DUTY

	DESCRIPTION	P/N
	KITS & HARDWARE	
	Heavy-Duty Bow Kit - Flat [Includes: A; 2]	1112667
	Heavy-Duty Bow Kit - 3" Rise [Includes: A; 3]	1126917
	Heavy-Duty Bow Kit - 8" Rise [Includes: A; 3]	1106615
	Heavy-Duty Bow Kit - 12" Rise [Includes: A; 3]	1102697
A	Heavy-Duty Bow Bracket Kit [Includes: B; 1; 2 of 4 & 6]	1107245
B	Heavy-Duty Bow Mtg. Hdw. [Includes: 2 of 5; 6 of 7, 8 & 9]	1107244
	PARTS	
1	Heavy-Duty Bow Shank	1104706
2	Heavy-Duty Bow - Flat	1112669
3	Heavy-Duty Bow - 3" Rise	1123052
	Heavy-Duty Bow - 8" Rise	1106612
	Heavy-Duty Bow - 12" Rise	1101927
4	Heavy-Duty Bow Bracket	1106614
5	Lynch Pin - 5/16" x 1-3/4"	1701098
6	Heavy-Duty Bow Pin	1104123
7	Hex Nut - 3/8"	1700407
8	Lock Washer - 3/8"	1700434
9	Self-Tapping Screw - 3/8" x 1"	1700400

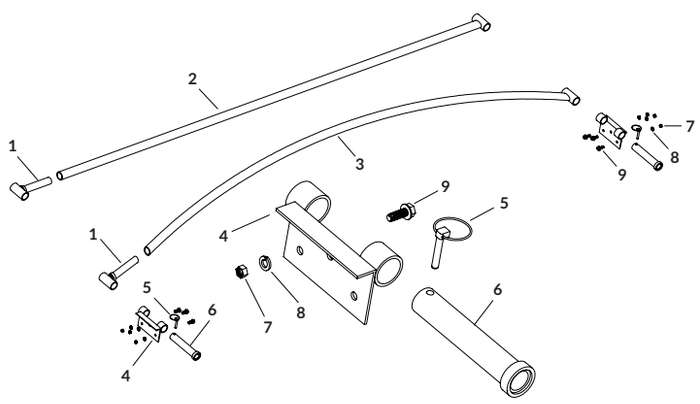

Table of Contents

Replacement Parts

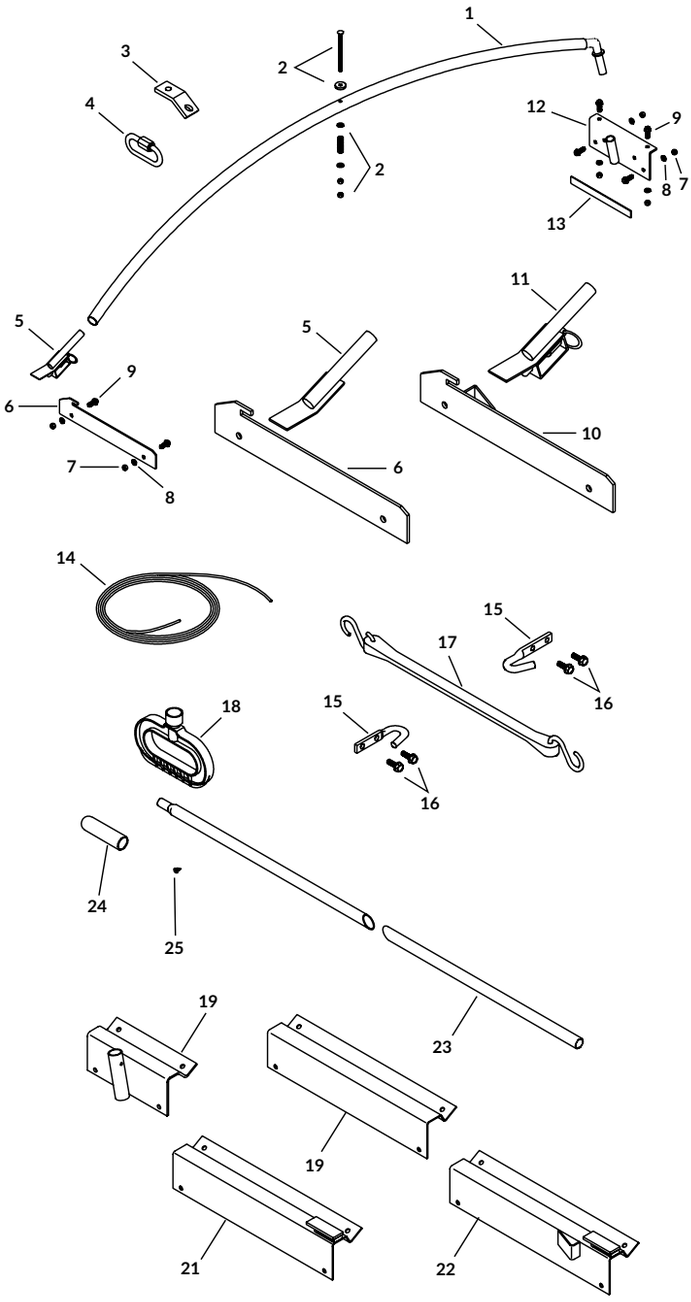

BOWS - TURNING POINT™

	DESCRIPTION	P/N
	KITS & HARDWARE	
	Pull Rope Kit [Includes: 3; 4; 14; 17; 18; 2 of 15; 4 of 16]	1105339
A	Bow Mtg. Hdw. - Turning Point™ [Includes: 2; 6 of 7, 8 & 9]	1105340
B	Rollaway Ridgepole Hdw [Includes: 2 of 24 & 25]	1105310
	PARTS	
1	Turning Point™ Bow - 8" Rise	1105337
	Turning Point™ Bow - 12" Rise	1105331
2	Bow Attachment Spring Assy	1110368
3	Pull Rope Anchor	1105325
4	Quick Link - 5/16"	1701219
5	Bow Rest - 8" Rise	1105333
	Bow Rest - 12" Rise	1105327
6	Bow Stop	1105314
7	Hex Nut - 3/8"	1700407
8	Lock Washer - 3/8"	1700434
9	Self-Tapping Screw - 3/8" x 1"	1700400
10	Turning Point™ Bow Stop w/Catch	1105320
11	Bow Rest/Latch - 8" Rise	1105338
	Bow Rest/Latch - 12" Rise	1105322
12	Bow Pivot Bracket	1105317
13	Pivot Bracket Spacer	1107006
14	Solid Braid Rope - 1/4" - 32'	1100469
15	Box Hook - 3/8" x 3-1/4"	1700682
16	Self-Tapping Screw - 1/4" x 3/4"	1700403
17	Natural Rubber Strap - 15"	1700649
18	Pull Handle	1106929
19	Bow Pivot Bracket	**1106805
20	Skid Plate	**1106806
21	Skid Plate w/Stop	**1106809
22	Skid Plate w/Catch	**1106810
23	Ridgepole Tube - 8'	1706159
	Ridgepole Tube - 11'	1706158
	Ridgepole Tube - 15'	1706157
	Ridgepole Tube - 16'	1701204
	Ridgepole Tube - 20'	1701205
	Ridgepole Tube - 24'	1701206
24	Protective Cap - 1-1/2$_6$ ID x 7-7/8$_6$	1700212
25	Flat-Headed Self-Drilling Screw - 1/4$_6$ x 3/4$_6$	1704768

*Order Turning Point™ bow kits by size of trailer, specifying 8" rise or 12" rise. Reverse roll option available; call for details.

**Items used for 39' Alumatech trailer ONLY

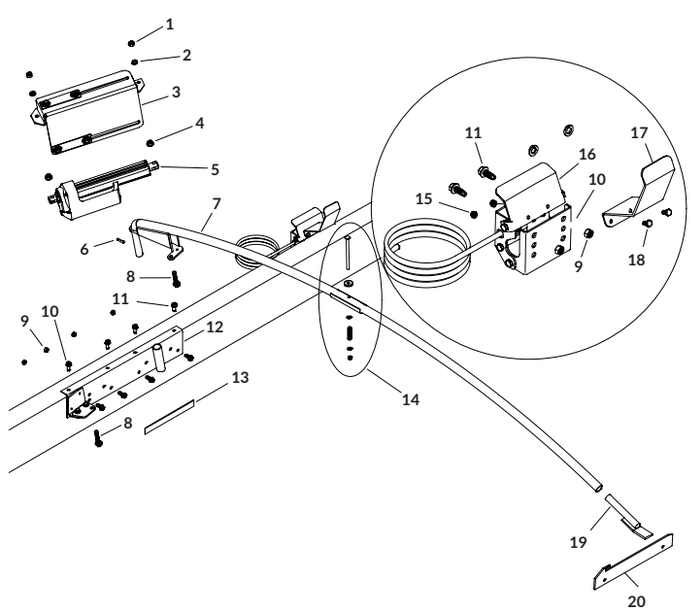

BOWS - ELECTRIC TURNING POINT™

	DESCRIPTION	P/N
	KITS & HARDWARE	
A	Actuator Mtg. Hdw. [Includes: 6; 2 of 1, 2, 4 & 8]	1117632
	PARTS	
1	Hex Nut - M12 x 1-3/4"	1704181
2	Lock Washer - 1/2"	1700437
3	Actuator Shield	1117633
4	Flange Locking Nut - M12 x 1-3/4"	1704180
5	Electric Linear Actuator	1704130
6	Spring Pin - 1/4" x 1-3/16"	1701118
7	Electric Turning Point™ Bow - 8" Rise	1117623
	Electric Turning Point™ Bow - 12" Rise	1117622
8	Hex Flange Cap Screw - M12 x 60	1704179
9	Hex Nut - 3/8"	1700407
10	Lock Washer - 3/8"	1700434
11	Self-Tapping Screw - 3/8" x 1"	1700400
12	Bow Pivot Bracket	1117628
13	Pivot Bracket Spacer	1107006
14	Bow Attachment Spring Assy	1110368
15	Nylon Lock Nut - 1/4"	1704185
16	Limit Switch	1117637
17	Contact Bracket Offset Adapter	1117643
18	Hex Head Cap Screw - 1/4" x 1/2"	1703960
19	Bow Rest - 8" Rise	1105333
	Bow Rest - 12" Rise	1105327
20	Bow Stop	1105314

CRANK ARMS - SHUR-FLEX™

	DESCRIPTION	P/N
	KITS & HARDWARE	
	Shur-Flex™ Crank Arm Kit - 40" Extension [Includes: D; F; 1; 12]	1101931
	Shur-Flex™ Crank Arm Kit - 54" Extension [Includes: D; F; 1; 12]	1107918
	Shur-Flex™ Crank Arm Kit - 80" Extension [Includes: D; F; 1; 12]	1102782
	Shur-Flex™ Crank Arm Kit - 96" Extension [Includes: D; F; 1; 12]	1105176
	Shur-Flex™ Conv Kit w/Offset Retainers - 40" [Includes: D; F; 4 of A]	1101933
	Shur-Flex™ Conv Kit w/Offset Retainers - 54" [Includes: D; F; 4 of A]	1116243
	Shur-Flex™ Conv Kit w/Offset Pinless Retainers - 40" [Includes: D; F; 4 of B]	1115376
	Shur-Flex™ Conv Kit w/Offset Pinless Retainers - 54" [Includes: D; F; 1; 12]	1116242
A	Offset Crank Retainer Kit [Includes: E; 14]	1101929
B	Offset Pinless Crank Retainer Kit [Includes: C; 14]	1114603
C	Offset Pinless Retainer Conversion Kit [Includes: 19; 20; 21; 22; 23; 24; 2 of 16, 17 & 18]	1114602
D	Shur-Flex™ Crank Extension - 40" [Includes: 3; 5; 6; 9]	1101932
	Shur-Flex™ Crank Extension - 54" [Includes: 3; 5; 6; 9]	1105048
	Shur-Flex™ Crank Extension - 80" [Includes: 3; 5; 6; 9]	1117752
	Shur-Flex™ Crank Extension - 96" [Includes: 3; 5; 6; 9]	1105047
E	Offset Crank Retainer Hdw [Includes: 2; 15; 2 of 16, 17 & 18]	1107062
F	Shur-Lok® Crank Hdw [Includes: 2; 4; 10; 11]	1105305
	PARTS	
1	Splined U-Joint	1701243
2	Wire Lock Pin - 3/8" x 2-1/2"	1700526
3	Lock Tube - 5-1/2"	1101924
4	Spring Pin - 3/8" x 2"	1700443
5	Shur-Flex™ Upper Crank Extension - 40"	1105001
	Shur-Flex™ Upper Crank Extension - 54"	1105050
	Shur-Flex™ Upper Crank Extension - 80"	1117753
	Shur-Flex™ Upper Crank Extension - 96"	1105049
6	Spring Pin - 1/4" x 1-3/16"	1701118
7	Male Knuckle w/Pin	1122522
8	Female Knuckle w/Pin	1122523
9	Lower Extension - 20"	1102691
10	Centerlock Hex Nut - 3/8"	1700418
11	Hex Head Cap Screw - 3/8" x 1-3/4"	1700369
12	Standard Crank Arm - 24"	1100171
13	Operating Decal	1100362
14	Offset J-Hook Crank Retainer	1101930
15	Cable w/#5 Interlock Snap	1100574
16	Self-Tapping Screw - 3/8" x 1"	1700400
17	Lock Washer - 3/8"	1700434
18	Hex Nut - 3/8"	1700407
19	Offset Pinless Crank Retainer Base Plate	1114599
20	Clevis Pin - 5/16" x 1-3/4"	1703133
21	Tension Spring	1703134
22	Bowtie Cotter Pin - 1-3/8"	1704380
23	Flat Washer - 1/4"	1700427
24	Offset Pinless Crank Retainer Lock	1114600
25	Crank Handle (handle - washer - nut)	1116110

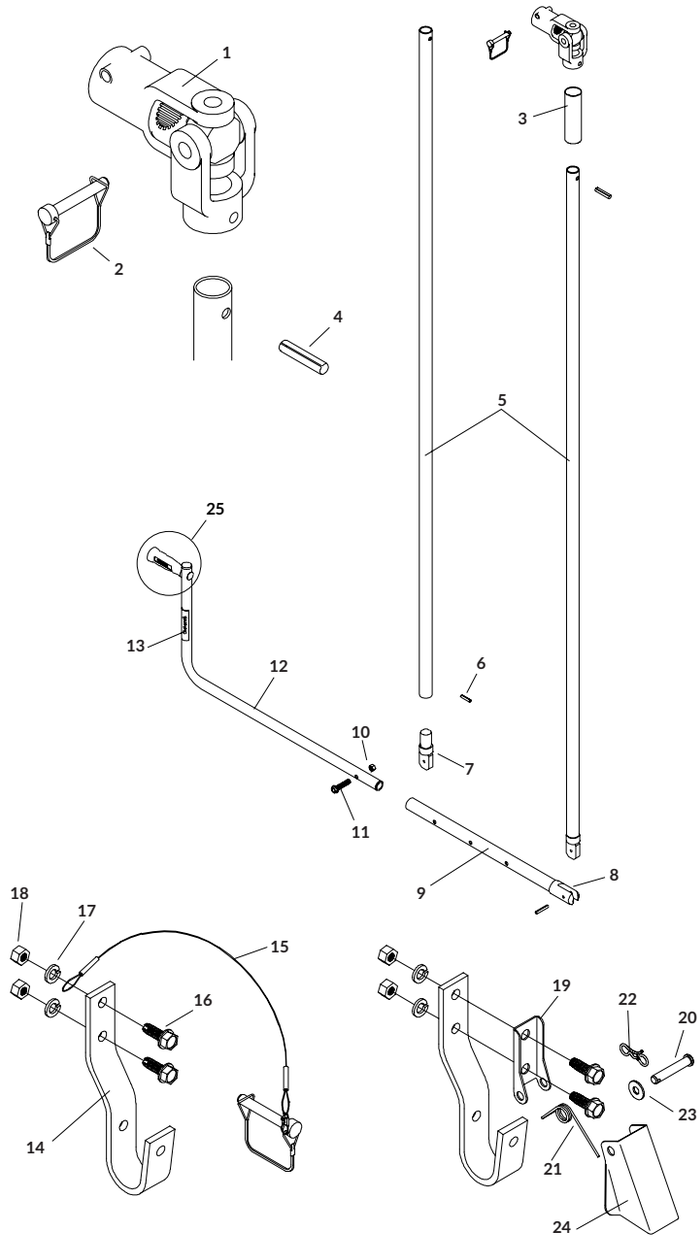

Table of Contents

Replacement Parts

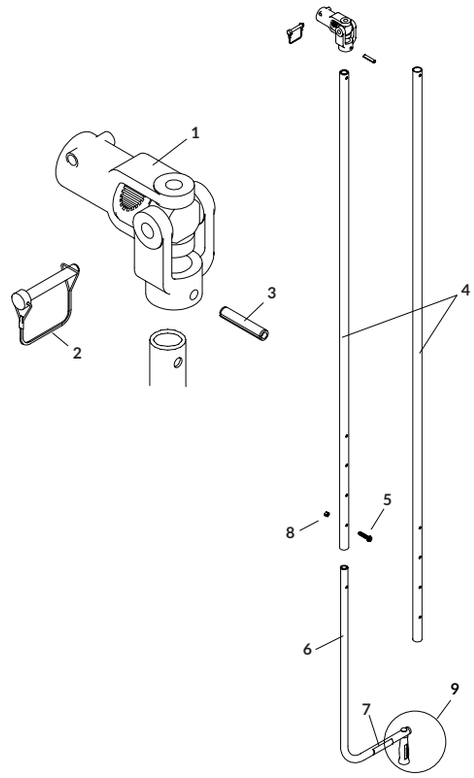

CRANK ARMS - STANDARD

	DESCRIPTION	P/N
	KITS & HARDWARE	
	Standard Crank Kit - 33" Extension [Includes: A; 1; 4; 6]	1100812
	Standard Crank Kit - 80" Extension [Includes: A; 1; 4; 6]	1100816
	Standard Crank Kit - 96" Extension [Includes: A; 1; 4; 6]	1122845
	Long Crank Kit - 80" Extension [Includes: A; 1; 4; 6]	1100813
A	Shur-Lok® Crank Hdw [Includes: 2; 3; 5; 8]	1105305
1	Splined U-Joint	1701243
2	Wire Lock Pin - 3/8" x 2-1/2"	1700526
3	Spring Pin - 3/8" x 2"	1700443
4	Crank Extension - 33"	1100687
	Crank Extension - 80"	1100028
	Crank Extension - 96"	1106449
5	Hex Head Cap Screw - 3/8" x 1-3/4"	1700369
6	Standard Crank Arm - 24"	1100171
	Long Crank Arm - 60"	1100069
7	Operating Decal	1100362
8	Centerlock Hex Nut - 3/8"	1700418
9	Crank Handle (handle - washer - nut)	1116110

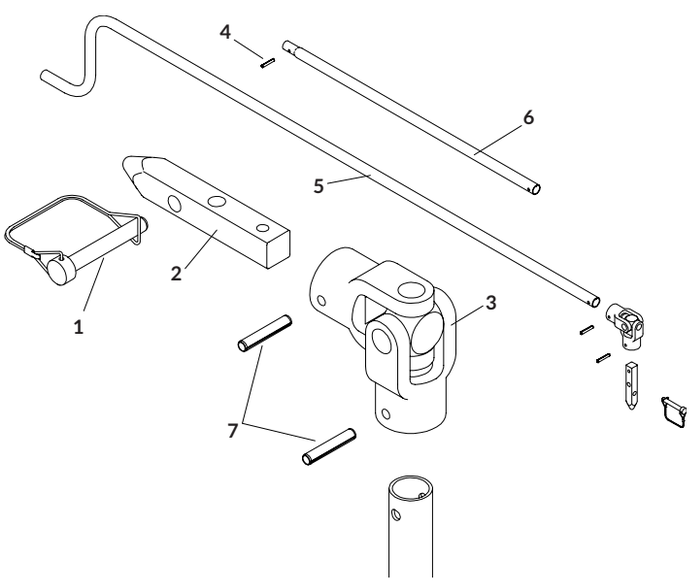

USE W/BELT N' RATCHET - CRANK ARMS - STANDARD

	DESCRIPTION	P/N
	KITS & HARDWARE	
	Standard Belt 'N Ratchet Crank Arm Kit [Includes: A; 5; 5]	*1100061
	Long Belt 'n Ratchet Crank Arm Kit [Includes: A; 3; 5; 6]	*1101500
A	PBR Crank Hdw [Includes: A; 2; 7; 2 of 4]	1115970
1	Wire Lock Pin - 3/8" x 2-1/2"	1700526
2	Pilot Crank Key	1115774
3	Econo U-Joint	1700527
4	Spring Pin - 1/4" x 1-1/2"	1700445
5	Offset Crank Arm	1100461
6	Square Crank Extension - 33"	1107838
7	Spring Pin - 1/4" x 1-3/16"	1701118

*Leave-on crank option requires wire lock pin (2), sold separately.

Table of Contents

Replacement Parts

CRANK RETAINERS

	DESCRIPTION	P/N
	KITS & HARDWARE	
	Crank Retainer Kit w/2" Standoff [Includes: B; 14; 18]	1100388
	Crank Retainer Kit w/3" Standoff [Includes: B; 14; 18]	1118649
	Crank Retainer Kit w/7" Standoff [Includes: B; 14; 18]	1100386
	Crank Retainer Kit w/11" Standoff [Includes: B; 14; 18]	1120633
	Pinless Crank Retainer Kit w/2" Standoff [Includes: C; 13; 14]	1107048
	Pinless Crank Retainer Kit w/3" Standoff [Includes: C; 13; 15]	1109115
	Pinless Crank Retainer Kit w/7" Standoff [Includes: C; 13; 16]	1107047
	Pinless Crank Retainer Kit w/11" Standoff [Includes: C; 13; 17]	1109479
	Pinless Crank Retainer Kit [Includes: 13; 19; 20]	1107052
	Offset Crank Retainer Kit [Includes: D; 12]	1101929
	Offset Pinless Crank Retainer Kit [Includes: A; 12]	1114603
A	Offset Pinless Retainer Conversion Kit [Includes: 6; 7; 8; 9; 10; 11; 2 of 1, 2 & 4]	1114602
B	Crank Retainer Hdw [Includes: 3; 5; 19; 20; 2 of 1, 2 & 4]	1107061
C	Pinless Crank Retainer Hdw. [Includes: 19; 20; 2 of 1, 2 & 4]	1107063
D	Offset Crank Retainer Hdw. [Includes: 3; 5; 2 of 1, 2 & 4]	1107062
E	Mounting Fasteners (10) [Includes: 10 of 1, 2 & 4]	1119159
	PARTS	
1	Hex Nut - 3/8"	1700407
2	Lock Washer - 3/8"	1700434
3	Cable w/#5 Interlock Snap	1100574
4	Self-Tapping Screw - 3/8" x 1"	1700400
5	Wire Lock Pin - 3/8" x 2-1/2"	1700526
6	Offset Pinless Crank Retainer Base Plate	1114599
7	Clevis Pin - 5/16" x 1-3/4"	1703133
8	Bowtie Cotter Pin - 1-3/8"	1704380
9	Flat Washer - 1/4"	1700427
10	Offset Pinless Crank Retainer Lock	1114600
11	Tension Spring	1703134
12	Offset J-Hook Crank Retainer	1101930
13	Pinless Crank Retainer	1107049
14	Crank Retainer Standoff - 2"	1100137
15	Crank Retainer Standoff - 3"	1107080
16	Crank Retainer Standoff - 7"	1100033
17	Crank Retainer Standoff - 11"	1109478
18	J-Hook Crank Retainer	1100040
19	Retainer Bushing - 11/16"	1100306
20	Flange Cap Screw - 1/2" x 1-1/4"	1702996

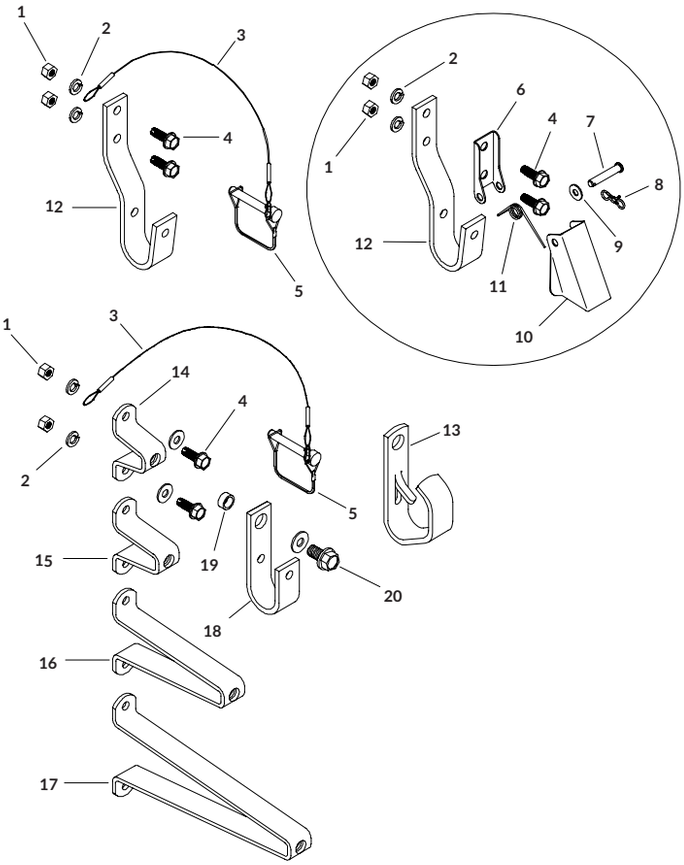

Table of Contents

Replacement Parts

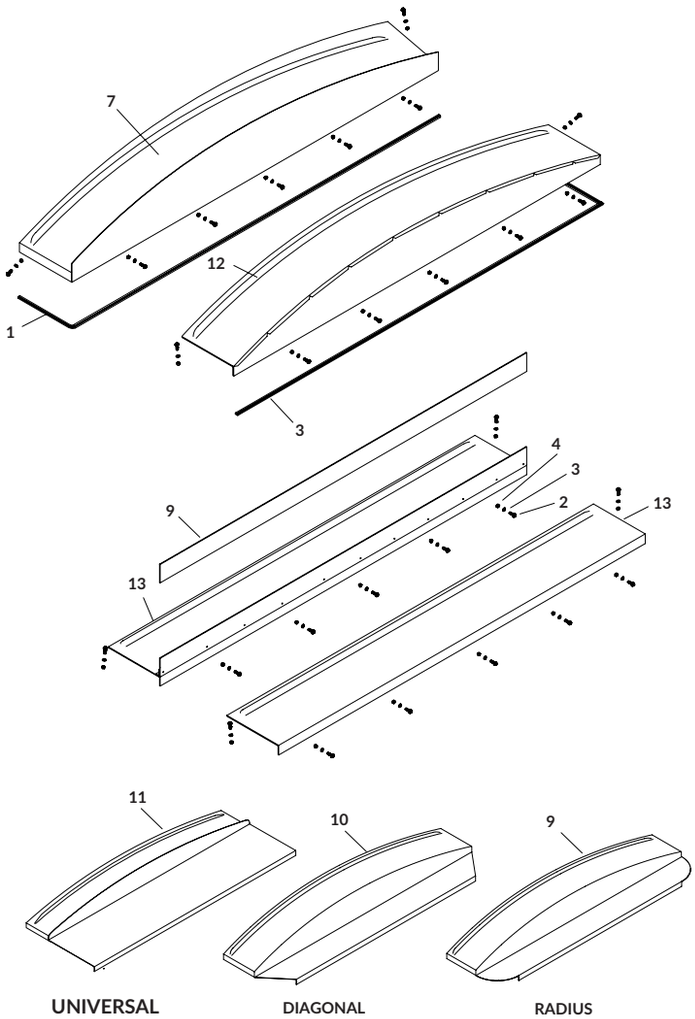

END CAPS - ALUMINUM FACE MOUNT

	DESCRIPTION	P/N
	HARDWARE	
	Cap Mtg. Hdw. w/Trim Seal - 110" [Includes: A; 1]	1107785
	Cap Mtg. Hdw. w/Trim Seal - 132" [Includes: A; 1]	1107786
	Cap Mtg. Hdw. w/Adhesive Seal - 138" [Includes: A; 1]	1125572
A	Mounting Fasteners (7) [Includes: 7 of 2, 3 & 4]	1107787
	PARTS	
1	Trim Seal - 110"	1100165
	Trim Seal - 132"	1100357
	Adhesive Rubber Seal - 138"	1117512
	Trim Seal (per foot)	1700152
	Adhesive Rubber Seal (per foot)	1704678
2	Self-Tapping Screw - 3/8" x 1"	1700400
3	Lock Washer - 3/8"	1700434
4	Hex Nut - 3/8"	1700407
5	Rubber Windshield (per foot)	1701238
	FRONT CAP	
6	Alum. SQ Front - 6" Rise x 11.25" x 94"	1107396
	Alum. SQ Front - 6" Rise x 11.25" x 95"	1107395
	Alum. SQ Front - 6" Rise x 11.25" x 96"	1107406
	Alum. SQ Front - 6" Rise x 11.25" x 102"	1107480
	Alum. SQ Front - 10" Rise x 11.25" x 96"	1107493
	Alum. SQ Front - 10" Rise x 11.25" x 102"	1107514
7	Alum. SQ Front - Flat x 10" x 96"	1107422
	Alum. SQ Front - Flat x 10" x 101.50"	1107510
8	Alum. Radius Front	CALL
9	Alum. Diagonal Front	CALL
10	Alum. Universal Front	CALL
	BACK CAP	
11	Alum. SQ Back - 6" Rise x 11.25" x 94"	1107417
	Alum. SQ Back - 6" Rise x 11.25" x 95"	1107420
	Alum. SQ Back - 6" Rise x 11.25" x 96"	1107426
	Alum. SQ Back - 6" Rise x 11.25" x 102"	1107483
	Alum. SQ Back - 10" Rise x 11.25" x 96"	1107501
	Alum. SQ Back - 10" Rise x 11.25" x 102"	1107517
12	Alum. SQ Back - Flat x 10" x 96"	1107421
	Alum. SQ Back - Flat x 10" x 101.50"	1107512

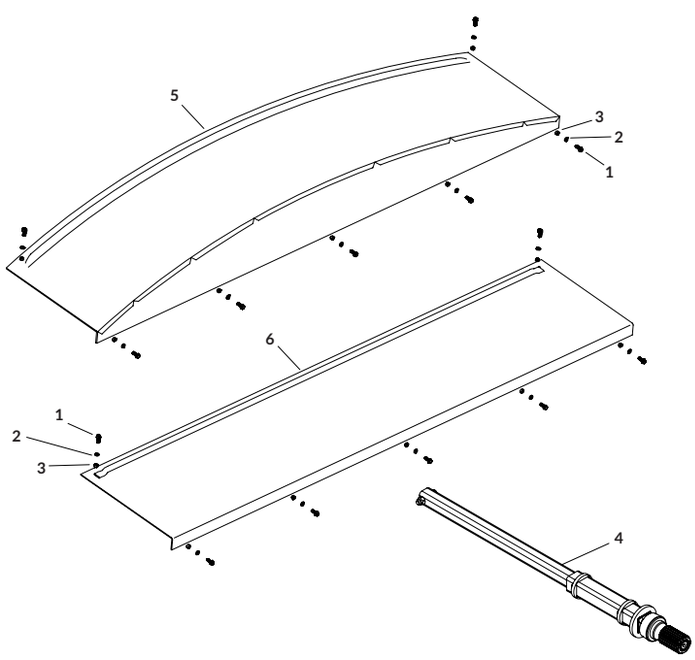

END CAPS - ALUMINUM EXTENDABLE SPLINE

	DESCRIPTION	P/N
	HARDWARE	
A	Mounting Fasteners (7) [Includes: 7 of 1, 2 & 3]	1107787
	PARTS	
1	Self-Tapping Screw - 3/8" x 1"	1700400
2	Lock Washer - 3/8"	1700434
3	Hex Nut - 3/8"	1700407
4	Extendable Spline Assy	1126182
	BACK CAP	
5	Alum SQ Back - 6" Rise x 26" x 96"	*1116177
	Alum SQ Back - 6" Rise x 26" x 102"	*1116181
6	Alum SQ Back - Flat x 26" x 95-3/4"	*1116179
	Alum SQ Back - Flat x 26" x 101.75"	*1116183

*Used with extendable spline assembly (P/N 1126182).

Table of Contents

Replacement Parts

END CAPS - FABRIC BACK

	DESCRIPTION	P/N
	KITS & HARDWARE	
	Single Back Std Fabric Cap Bow Kit - 8" Rise [Includes: A; 1; 6; 2 of 2 & 16; 6 of 12]	1100640
	Single Back Std Fabric Cap Bow Kit - 12" Rise [Includes: A; 1; 6; 2 of 2 & 16; 6 of 12]	1100639
	Single Back HD Fabric Cap/Flap Bow Kit - 8" Rise [Includes: 7; 9; 2 of 8, 10, 11 & 16; 6 of 3, 4, 5, 12, 13, 14 & 15]	1102903
	Single Back HD Fabric Cap/Flap Bow Kit - 12" Rise [Includes: 7; 9; 2 of 8, 10, 11 & 16; 6 of 3, 4, 5, 12, 13, 14 & 15]	1102829
A	Fabric Cap Hdw [Includes: 4 of 3, 4 & 5; 6 of 13, 14 & 15]	1105303
	PARTS	
1	Galv Bow - 8" Rise - 93" to 102"	1100760
	Galv Bow - 12" Rise - 96" to 102"	1100762
2	Single Bow Bracket	1120836
3	Self-Tapping Screw - 3/8" x 1"	1700400
4	Hex Nut - 3/8"	1700407
5	Lock Washer - 3/8"	1700434
6	Galv Bow Shank - 8" Rise	1100695
	Galv Bow Shank - 12" Rise	1106925
7	Heavy-Duty Bow - 8" Rise	1106612
	Heavy-Duty Bow - 12" Rise	1101927
8	Heavy-Duty Bow Pin	1104123
9	Heavy-Duty Bow Shank	1104706
10	Heavy-Duty Bow Bracket	1106614
11	Lynch Pin - 5/16" x 1-3/4"	1701098
12	Bungee Cord - 18"	1700990
13	Rope Anchor	1701355
14	Self-Tapping Screw - 5/16" x 1"	1701059
15	Nylon Lock Hex Nut - 5/16"	1700419
16	Alum Flat Bar - 103"	1700581
	FABRIC INSERT ONLY	
17	Square Fabric Back - 96"	
	Square Fabric Back - 102"	
	FABRIC FLAP INSERT ONLY	
18	Dump Fabric Flap - 96"	
	Dump Fabric Flap - 102"	

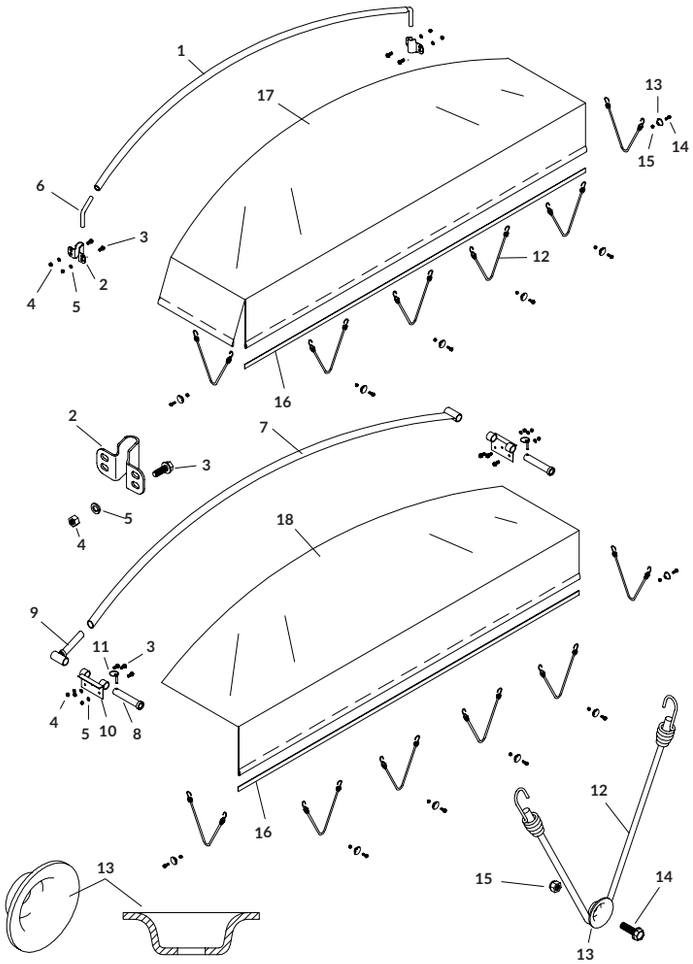

END CAPS - FABRIC FRONT

	DESCRIPTION	P/N
	KITS & HARDWARE	
	Double Front Fabric Cap Bow Kit - 8" Rise [Includes: A; 1; 2 of 4, 7 & 11; 6 of 10]	1100642
	Double Front Fabric Cap Bow Kit - 12" Rise [Includes: A; 1; 2 of 4, 7 & 11; 6 of 10]	1100641
A	Fabric Cap Hdw [Includes: 4 of 3, 4 & 5; 6 of 13, 14 & 15]	1105303
	PARTS	
1	Galv Bow - 8" Rise - 93" to 102"	1100760
	Galv Bow - 12" Rise - 96" to 102"	1100762
2	Lock Washer - 3/8"	1700434
3	Hex Nut - 3/8"	1700407
4	Double Bow Bracket	1108211
5	Self-Tapping Screw - 3/8" x 1"	1700400
6	Rope Anchor	1701355
7	Alum Flat Bar - 103"	1700581
8	Self-Tapping Screw - 5/16" x 1"	1701059
9	Nylon Lock Hex Nut - 5/16"	1700419
10	Bungee Cord - 18"	1700990
11	Galv Bow Shank - 8" Rise	1100695
	Galv Bow Shank - 12" Rise	1106925
	FABRIC INSERT ONLY	
12	Square Fabric Front - 96"	
	Square Fabric Front - 102"	
	Radius/Diagonal Fabric Front - 96"	
	Radius/Diagonal Fabric Front - 102"	

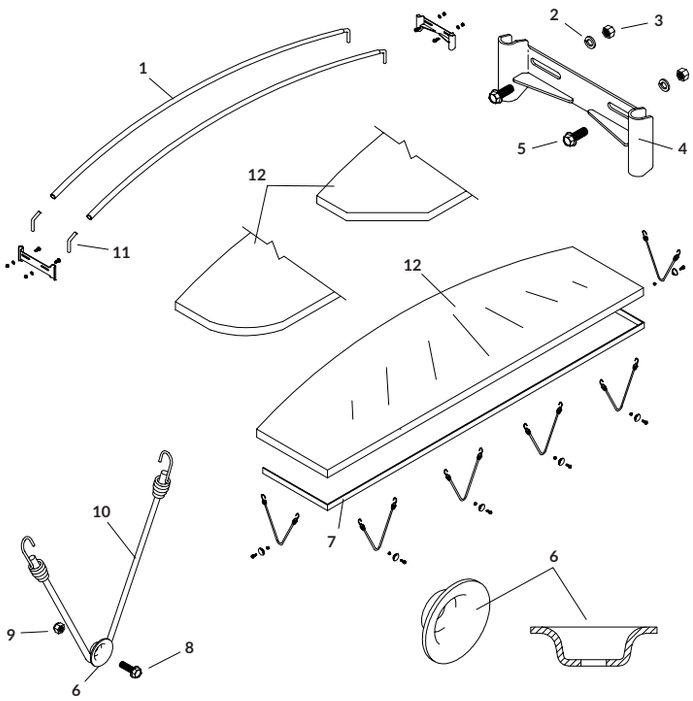

Table of Contents

Replacement Parts

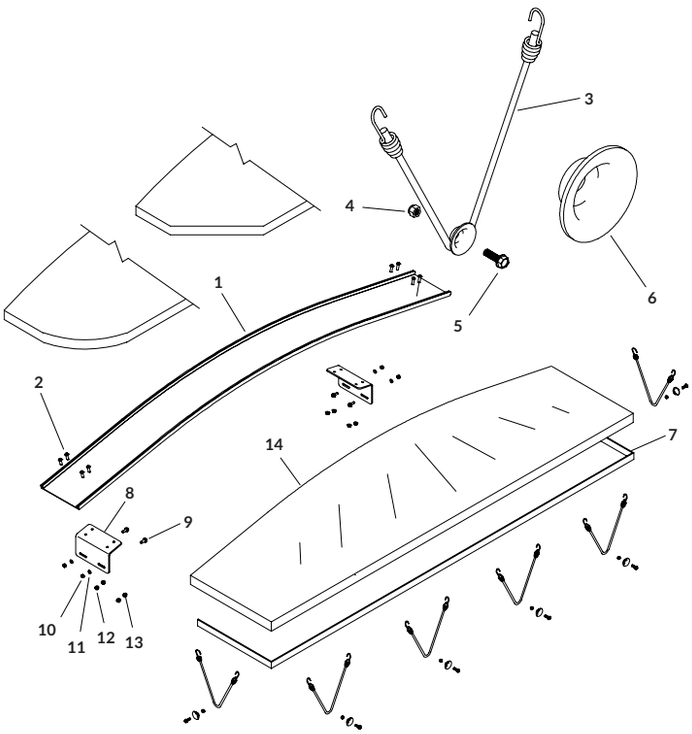

END CAPS - FABRIC BACK/FRONT COMBO

	DESCRIPTION	P/N
	HARDWARE	
	Combo Bow Kit w/Flatbar - 8" Rise - 96" [Includes: D; E; 1; 2 of 7 & 8; 6 of 3]	1122908
	Combo Bow Kit w/Flatbar - 8" Rise - 102" [Includes: D; E; 1; 2 of 7 & 8; 6 of 3]	1122911
	Combo Bow Kit w/Flatbar - 10" Rise - 96" [Includes: D; E; 1; 2 of 7 & 8; 6 of 3]	1122910
	Combo Bow Kit w/Flatbar - 10" Rise - 102" [Includes: D; E; 1; 2 of 7 & 8; 6 of 3]	1122913
	Combo Bow Kit w/Flatbar - 12" Rise - 96" [Includes: D; E; 1; 2 of 7 & 8; 6 of 3]	1122909
	Combo Bow Kit w/Flatbar - 12" Rise - 102" [Includes: D; E; 1; 2 of 7 & 8; 6 of 3]	1122912
	Combo Bow Kit w/Straps - 8" Rise - 96" [Includes: E; F; 1; 2 of 8; 8 of 3]	1122914
	Combo Bow Kit w/Straps - 8" Rise - 102" [Includes: E; F; 1; 2 of 8; 8 of 3]	1122917
	Combo Bow Kit w/Straps - 10" Rise - 96" [Includes: E; F; 1; 2 of 8; 8 of 3]	1122916
	Combo Bow Kit w/Straps - 10" Rise - 102" [Includes: E; F; 1; 2 of 8; 8 of 3]	1122919
	Combo Bow Kit w/Straps - 12" Rise - 96" [Includes: E; F; 1; 2 of 8; 8 of 3]	1122915
	Combo Bow Kit w/Straps - 12" Rise - 102" [Includes: E; F; 1; 2 of 8; 8 of 3]	1122918
A	Combo Bow w/Mtg. Brackets - 8" Rise - 96" [Includes: 1; 2 of 8]	1122902
	Combo Bow w/Mtg. Brackets - 8" Rise - 102" [Includes: 1; 2 of 8]	1122905
B	Combo Bow w/Mtg. Brackets - 10" Rise - 96" [Includes: 1; 2 of 8]	1122904
	Combo Bow w/Mtg. Brackets - 10" Rise - 102" [Includes: 1; 2 of 8]	1122907
C	Combo Bow w/Mtg. Brackets - 12" Rise - 96" [Includes: 1; 2 of 8]	1122903
	Combo Bow w/Mtg. Brackets - 12" Rise - 102" [Includes: 1; 2 of 8]	1122906
D	Fabric Cap Hdw. [Includes: 4 of 9, 10 & 11; 6 of 4, 5 & 6]	1105303
E	Combo Cap Hdw. [Includes: 8 of 2 & 12]	1122936
F	Mounting Fasteners (4) [Includes: 4 of 9, 10 & 11]	1107711
	PARTS	
1	Combo Bow - 8" Rise - 96"	1122863
	Combo Bow - 8" Rise - 102"	1122860
	Combo Bow - 10" Rise - 96"	1122864
	Combo Bow - 10" Rise - 102"	1122861
	Combo Bow - 12" Rise - 96"	1122865
	Combo Bow - 12" Rise - 102"	1122862
2	Button Head Cap Screw - 3/8" x 1-1/4"	1704706
3	Bungee Cord - 18"	1700990
	EPDM Rubber Strap - 21"	1702161
4	Nylon Lock Hex Nut - 5/16"	1700419
5	Self-Tapping Screw - 5/16" x 1"	1701059
6	Rope Anchor	1701355
7	Alum. Flat Bar - 103"	1700581
8	Combo Bow Bracket - 8" Rise	1122897
	Combo Bow Bracket - 10" Rise	1122898
	Combo Bow Bracket - 12" Rise	1122899
9	Self-Tapping Screw - 3/8" x 1"	1700400
10	Hex Nut - 3/8"	1700407
11	Lock Washer - 3/8"	1700434
12	Hex Flange Nut - 3/8"	1704371
13	Top Lock Flange Nut - 3/8"	1701283
	FABRIC INSERT ONLY	
14	Combo Fabric Cap - 96"	
	Combo Fabric Cap - 102"	

Table of Contents

Replacement Parts

END CAPS - GALVANIZED FACE MOUNT

	DESCRIPTION	P/N
	HARDWARE	
A	Mounting Fasteners (7) [Includes: 7 of 1, 2 & 3]	1107787
	PARTS	
1	Self-Tapping Screw - 3/8" x 1"	1700400
2	Lock Washer - 3/8"	1700434
3	Hex Nut - 3/8"	1700407
	FRONT/BACK CAP	
4	Galv. Face Mt Cap - 6" Rise x 10" x 89"	1122295
	Galv. Face Mt. Cap - 6" Rise x 10" x 93"	1122283
	Galv. Face Mt. Cap - 6" Rise x 10" x 95"	1122281
	Galv. Face Mt. Cap - 6" Rise x 10" x 100"	1122289
	Galv. Face Mt. Cap - 10" Rise x 10" x 89"	1122297
	Galv. Face Mt. Cap - 10" Rise x 10" x 93"	1122293
	Galv. Face Mt. Cap - 10" Rise x 10" x 95"	1122285

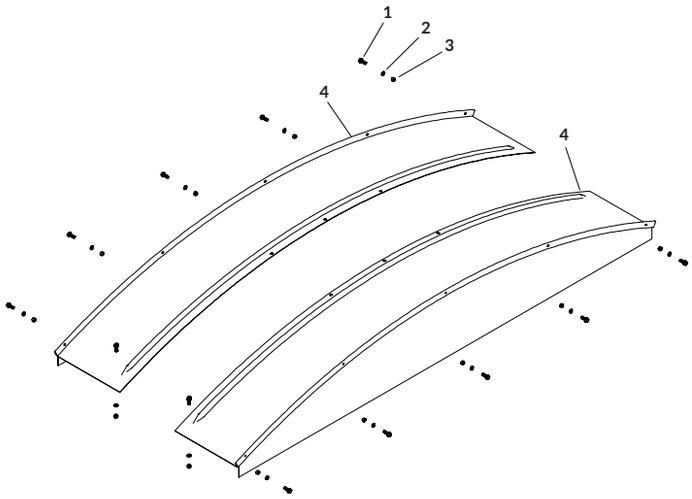

END CAPS - GALVANIZED TOP MOUNT

	DESCRIPTION	P/N
	HARDWARE	
A	Mounting Fasteners (7) [Includes: 7 of 1, 2 & 3]	1107787
	PARTS	
1	Self-Tapping Screw - 3/8" x 1"	1700400
2	Lock Washer - 3/8"	1700434
3	Hex Nut - 3/8"	1700407
	FRONT/BACK CAP	
4	Galv. Top Mt. Cap - 6" Rise x 10" x 89"	1113034
	Galv .Top Mt. Cap - 6" Rise x 10" x 93"	1108977
	Galv .Top Mt. Cap - 6" Rise x 10" x 95"	1108980
	Galv. Top Mt. Cap - 6" Rise x 10" x 100"	1108983
	Galv. Top Mt. Cap - 10" Rise x 10" x 89"	1113031
	Galv. Top Mt. Cap - 10" Rise x 10" x 93"	1108986
	Galv. Top Mt. Cap - 10" Rise x 10" x 95"	1108989
	Galv. Top Mt. Cap - 10" Rise x 10" x 100"	1108992

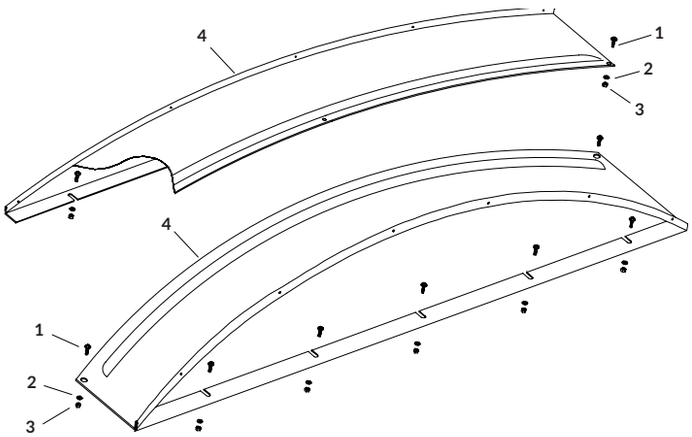

USE W/BELT N' RATCHET - HOLD-DOWNS

	DESCRIPTION	P/N
	KITS & HARDWARE	
	Cable Hold-Down Kit - 7' [Includes: A; 8; 7; 12]	1106770
	Strap Hold-Down Kit - 5' [Includes: A; 8; 7; 12]	1106771
	Strap Hold-Down Kit - 9' [Includes: A; 8; 7; 12]	1106772
	Strap Hold-Down Kit w/Hook - 5' [Includes: A; 6; 8; 12]	1107224
	Strap Hold-Down Kit w/Hook - 7' [Includes: A; 6; 8; 12]	1107225
	U-Clamp Kit 2" - (3) [Includes: 3 of 3 & 4]	1115966
	U-Clamp Kit 2" - (8) [Includes: 8 of 3 & 4]	1118643
	U-Clamp Kit 2" - (10) [Includes: 10 of 3 & 4]	1118644
	U-Clamp Kit 2" - (14) [Includes: 14 of 3 & 4]	1118663
A	Mounting Fasteners (2) [Includes: 2 of 9, 10 & 11]	1118592
	PARTS	
1	Strap Assy - 9'	1106774
	Strap Assy - 10'	1110337
2	Strap Assy - 5'	1100470
3	Plastic U-Clamp	1701354
4	Self-Drilling Screw - 1/4" x 3/4"	1700398
5	Wire Hook Strap Assy - 7'	1107223
6	Wire Hook Strap Assy - 5'	1107222
7	Cable Assy - 7'	1106763
8	Ratchet - 2"	1100457
9	Self-Tapping Screw - 3/8" x 1"	1700400
10	Lock Washer - 3/8"	1700434
11	Hex Nut - 3/8"	1700407
12	Web Assy w/Hook	1106754

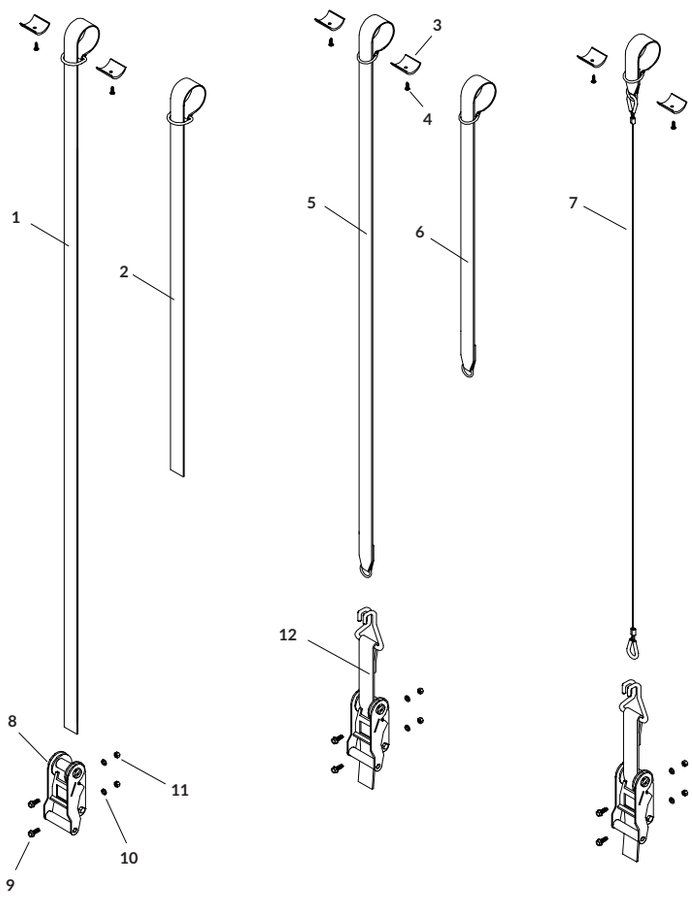

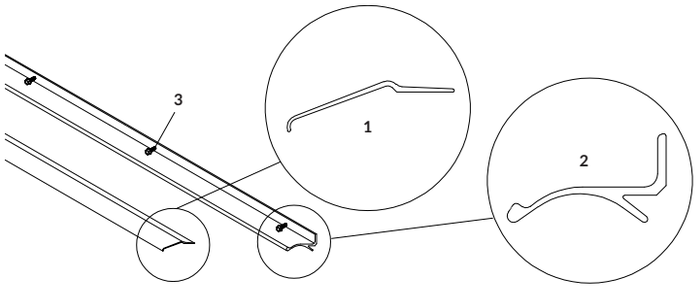

LATCHPLATES

	DESCRIPTION	P/N
	PARTS	
1	Alum Top Mount Latchplate - 4'	1100370
	Alum Top Mount Latchplate - 6'	1100369
	Alum Top Mount Latchplate - 8'	1100368
2	Alum Side Mount Latchplate - 4'	1100749
	Alum Side Mount Latchplate - 6'	1700802
	Alum Side Mount Latchplate - 8'	1700522
3	Self-Tapping Screw - 3/8" x 1"	1700400

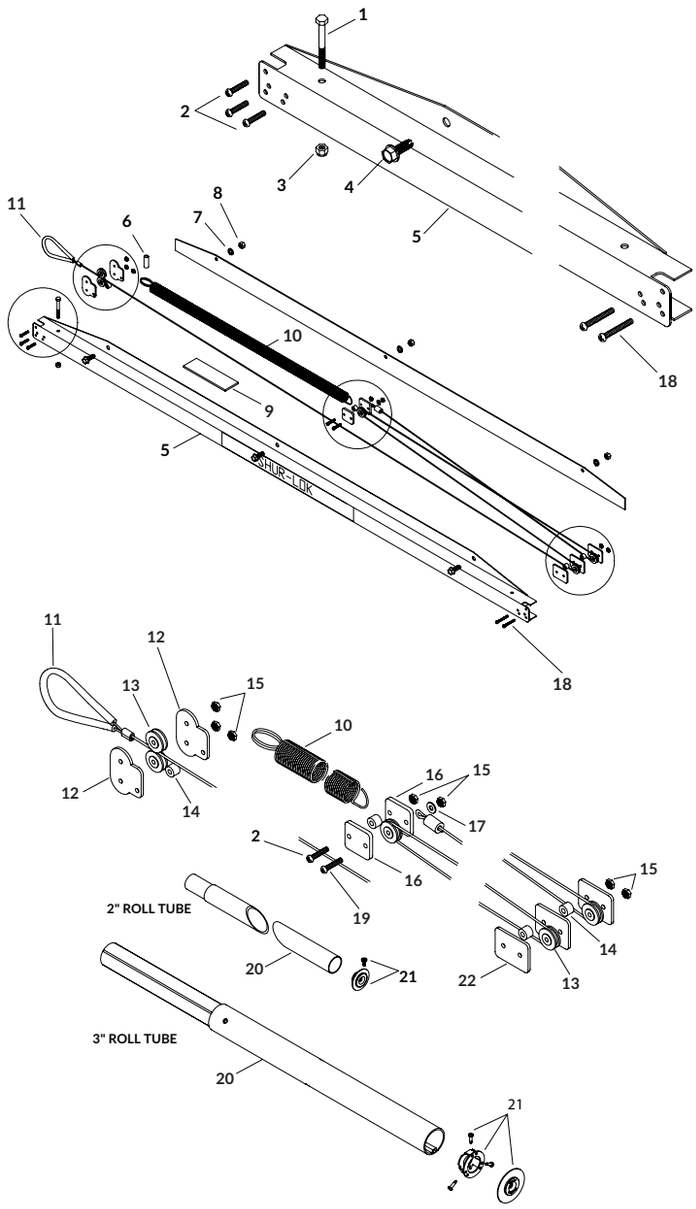

RETURNS - FRONT | REAR CABLE

	DESCRIPTION	P/N
	KITS & HARDWARE	
	Rear Cable Return Kit [Includes A; 1; 3; 5; 6; 9; 10; 11; 17; 19; 2 of 12, 16 & 18; 3 of 22; 4 of 2 & 14; 5 of 13; 7 of 15]	1111121
	Rear Cable Return Kit w/Roll Tube Ext. [Includes A; 1; 3; 5; 6; 9; 11; 17; 19; 20; 21; 2 of 12, 15, 17 & 18; 3 of 22; 4 of 2 & 14; 5 of 13; 7 of 15]	1112064
	Front Cable Return Kit [Includes A; 1; 3; 5; 6; 9; 10; 11; 17; 19; 21; 2 of 12, 16 & 18; 3 of 22; 4 of 2 & 14; 5 of 13; 7 of 15]	1111122
	Front Cable Return Kit w/Roll Tube Ext. [Includes A; 1; 3; 5; 6; 9; 11; 17; 19; 20; 21; 2 of 12, 16, 17 & 18; 3 of 22; 4 of 2 & 14; 5 of 13; 7 of 15]	1112065
	HD Rear Cable Return Kit - 3" [Includes A; 1; 3; 5; 6; 9; 10; 11; 17; 19; 2 of 12, 16 & 18; 3 of 22; 4 of 2 & 14; 5 of 13; 7 of 15]	*1124868
	HD Rear Cable Return Kit w/Roll Tube Ext. - 3" [Includes A; 1; 3; 5; 6; 9; 11; 17; 19; 20; 21; 2 of 12, 15, 17 & 18; 3 of 22; 4 of 2 & 14; 5 of 13; 7 of 15]	*1124905
	HD Front Cable Return Kit - 3" [Includes A; 1; 3; 5; 6; 9; 10; 11; 17; 19; 21; 2 of 12, 16 & 18; 3 of 22; 4 of 2 & 14; 5 of 13; 7 of 15]	*1124869
	HD Front Cable Return Kit w/Roll Tube Ext. - 3" [Includes A; 1; 3; 5; 6; 9; 11; 17; 19; 20; 21; 2 of 12, 16, 17 & 18; 3 of 22; 4 of 2 & 14; 5 of 13; 7 of 15]	*1124906
A	Cable Return Mounting Hdw [Includes 3 of 4, 7 & 8]	1111469
	PARTS	
1	Hex Head Cap Screw - 1/4" x 2-1/4"	1702672
2	Machine Screw - 1"	1702654
3	Nylon Lock Hex Nut - 1/4"	1701543
4	Self-Tapping Screw - 3/8" x 1"	1700400
5	Universal Cable Return Housing	1114728
6	Spacer Washer - 1-9/16"	1131010
7	Lock Washer - 3/8"	1700434
8	Hex Nut - 3/8"	1700407
9	Velcro® Hook - 1" x 4"	1115206
10	Extension Spring	1702657
	Heavy-Duty Extension Spring	1702896
11	Cable w/Return Strap	1114582
	Cable w/Return Strap - 3"	*1124870
12	Front Retainer Plate	1114691
13	Pulley - 1/16" Cable Groove	1703006
14	Plastic Spacer - 3/8"	1111056
15	Machine Screw Nut	1702653
16	Rope Block Retainer Plate	1112997
17	Flat Washer - #10	1111054
18	Machine Screw - 1-1/2"	1702656
19	Machine Screw - 1-1/4"	1702655
20	Swaged Roll Tube Extension - 2" x 32"	1117496
	Roll Tube Extension - 3" x 45"	*1124901
21	End Plug/Cable Retainer w/Screw	1111808
	End Plug/Cable Retainer w/Screws - 3"	*1124904
22	Rear Retainer Plate	1110913

*Used with 3" roll tubes.

NOTE: Reverse-roll systems, use rear returns on the front of trailer, front returns on the rear of trailer.

Table of Contents

Replacement Parts

RETURNS - HEAVY-DUTY FRONT ARM

	DESCRIPTION	P/N
	KITS & HARDWARE	
	HD Front Arm Return Kit [Includes: C; D; E; F; 4; 17; 24; 25; 26; 32; 2 of 5; 4 of 9; Sloped Brkt and 3-3/4" Pvt Brkt]	1124119
	HD Front Arm Return Kit - 3" [Includes: C; D; E; F; 4; 17; 24; 25; 26; 32; 2 of 5; 4 of 9; Sloped Brkt and 3-3/4" Pvt Brkt]	*1124794
A	Flex Arm Joint Kit - 4500 HD [Includes: 24; 25; 2 of 19; 20 ; 21 & 23; 4 of 18 & 22]	1125154
B	Flex Joint Hdw (1) [Includes: 19; 21; 2 of 18 & 22]	1121702
C	Flex Joint Hdw (2) [Includes: 2 of 19 & 21; 4 of 18 & 22]	1121647
D	Spring Support Hdw [Includes: 10; 11; 13; 14; 15; 2 of 8 & 12]	1116926
E	Pivot Bracket Hdw - 6" Sloped [Includes: 6 of 5; 16 of 1; 2 & 6; 26 of 3]	1121580
F	Exposed Spline/Bearing Hdw [Includes: 28; 29; 2 of 16; 20 & 30; 4 of 22; 27]	1121723
G	Exposed Spline/Bearing Hdw - 3" [Includes: 28; 29; 33; 2 of 16; 20 & 30; 3 of 31; 4 of 22 & 27]	*1124795
	PARTS	
1	Hex Nut - 3/8"	1700407
2	Lock Washer - 3/8"	1700434
3	Flat Washer - 3/8"	1700429
4	Pivot Pin - 4 Spring	1116920
5	Spacer Washer - 1/4" x 1" OD x .406"	1120291
6	Hex Head Cap Screw - 3/8" x 1-1/4"	1702891
7	Pivot Mnt Bracket - 6" x 9-1/4"	1121578
8	Spacer Washer - 1/4" x 1.81 OD x 1.28"	1118318
9	Spiral Torsion Spring	1111027
10	Spacer Tube - .35" x 2-5/8"	1117033
11	Hex Head Cap Screw - 5/16" x 3-1/2"	1201022
12	Flat Washer - 5/16"	1700428
13	Nylon Lock Hex Nut - 5/16"	1700419
14	Flat Washer - 1-1/4" x 1-7/8"	1702890
15	Retaining Ring - 1-1/4"	1702888
16	Cap Plug	1704892
17	Lower Flex Arm w/Warning Decals - Front	1121617
18	Carriage Bolt - 5/16" x 2-1/2" - GR5	1701455
19	Bellow Plate - Square Holes	1121414
20	End Fitting	1704891
21	Bellow Plate - Round Holes	1121413
22	Flanged Nylon Lock Nut - 5/16"	1704931
23	Spring Pin - 1/4" x 1-3/8"	1704966
24	Flex Arm Joint	1706825
25	Arm Bellow	1704775
26	Upper Flex Arm - Bearing	1121281
	Upper Flex Arm - Bearing - 3"	*1124958
27	Shoulder Bolt - 3/8" x 2" Thread x 5/16" x 1/2"	1704943
28	Bearing Mount Box	1121430
	Bearing Mount Box - 3"	*1123248
29	Rear Arm Bearing Ring	1704942
	Rear Arm Bearing Ring - 3"	*1705160
30	Blind Rivet - 3/16"	1700398
31	Self-Drilling Screw - 1/4" x 3/4"	1704743
32	Nylon End Plug	1100138
33	Roll Tube End Cap - Front	*1121041

*Used with 3" roll tubes.

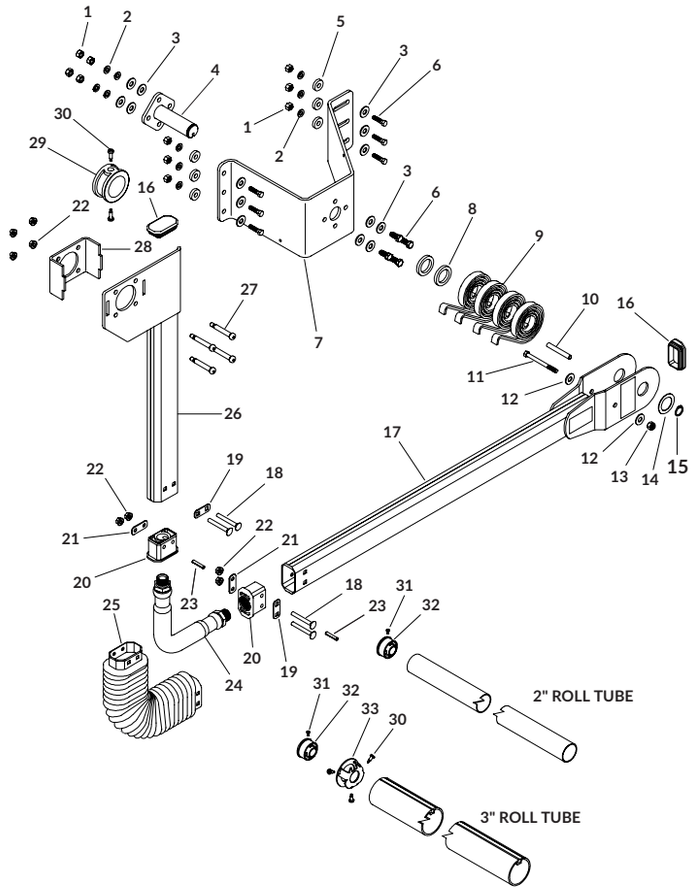

USE W/ BELT N' RATCHET - RETURNS - ROPE

	DESCRIPTION	P/N
	KITS	
	Rope Return Kit [Includes: 1; 2 of 5; 4 of 2, 3 & 4]	1100064
	PARTS	
1	Solid Braid Rope - 1/4" - 32'	1100469
2	Hex Head Cap Screw - 1/4" x 1"	1700381
3	Hex Nut - 1/4"	1700408
4	Lock Washer - 1/4"	1700436
5	Box Hook - 3/8" x 3-1/4"	1700682

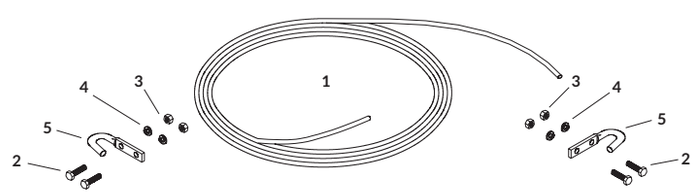

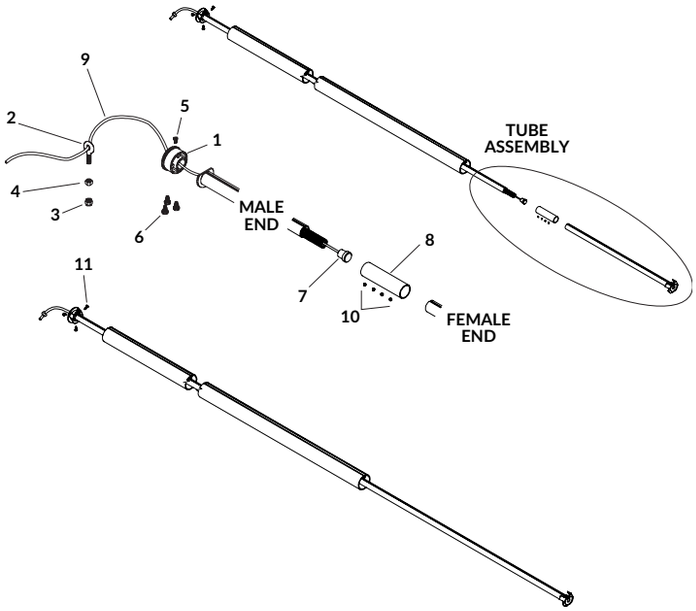

RETURNS - SHUR-RETURN™

	DESCRIPTION	P/N
	KITS & HARDWARE	
	Shur-Return™ Kit [Includes: Tube Assembly; A]	*1100824
	2-Piece Shur-Return™ Kit [Includes: Tube Assembly; A; 7; 8; 9; 4 of 10]	*1107881
	Shur-Return™ Kit - 3" [Includes: Tube Assembly; B]	* **1124875
	2-Piece Shur-Return™ Kit - 3" [Includes: Tube Assembly; B; 7; 8; 9; 4 of 10]	* **1124876
A	Shur-Return™ Hdw [Includes 1; 2; 3; 4; 5; 5 of 6]	1107128
B	Shur-Return™ Hdw - 3" [Includes 1; 2; 3; 4; 5; 3 of 11; 5 of 6]	**1124881
	PARTS	
1	Nylon End Plug	1100138
2	Eyebolt Anchor - 5/16"	1700717
3	Nylon Lock Hex Nut - 5/16"	1700419
4	Hex Nut - 5/16"	1700411
5	Self-Drilling Screw - #10-16 x 1/2"	1704743
6	Self-Tapping Screw - 1/4" x 1/2"	1700736
7	Spring Retainer Plug	1100827
8	Connector Sleeve	1107879
9	Shur-Return™ Rope - 12'	1100826
10	Hex Socket Set Screw - #10-32 x 3/16"	1701423
11	Self-Drilling Screw - 1/4" x 1"	1705198

*Additional over length shipping charges apply.
**Used with 3" roll tubes.

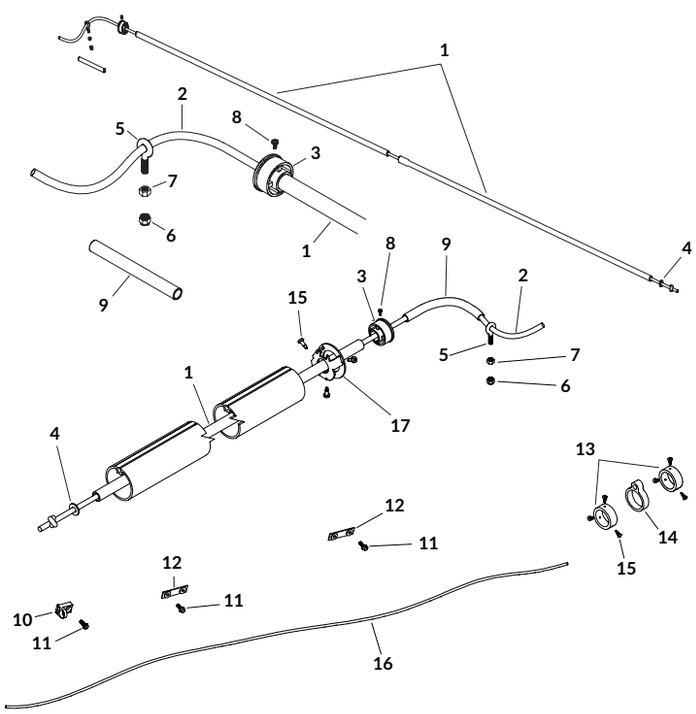

RETURNS - STRETCH CORD (BUNGEE)

	DESCRIPTION	P/N
	KITS & HARDWARE	
	Front Stretch Cord Roll Return Kit [Includes: A; 1; 2]	1114359
	Front Stretch Cord Roll Return Kit - 3" [Includes: B; 1; 2]	*1124882
	Shock Cord Roll Return Kit - 2" [Includes: 10; 12; 14; 16; 2 of 11 & 13; 6 of 15]	1114951
	Replacement End Plug Kit [Includes: 3; 8]	1119034
A	Roll Return Hdw. [Includes: 3; 4; 5; 6; 7; 8; 9]	1107127
B	Roll Return Hdw - 3" [Includes: 3; 4; 5; 6; 7; 8; 9; 17; 3 of 15]	*1124883
	PARTS	
1	Roll Return Tube Set - 2 PC.	1111067
2	Roll Return Stretch Cord - 138$_6$	**1114360
	Bulk Roll Return Stretch Cord (Sold only in 300' rolls)	1703335
3	Nylon End Plug	1100138
4	Flat Washer - 1/2"	1703373
5	Eyebolt Anchor - 5/16"	1700717
6	Nylon Lock Hex Nut - 5/16"	1700419
7	Hex Nut - 5/16"	1700411
8	Self-Drilling Screw - #10 x 1/2"	1704743
9	Protective Stretch Cord Cover	1107680
10	Shock Cord Eye Bracket	1703445
11	Self-Tapping Screw - 3/8" x 1"	1700400
12	Shock Cord Tie-Down Strap	1114948
13	Rear Arm Retaining Collar	1704352
14	Roll Tube Eye	1114947
15	Self-Drilling Screw - 1/4" x 1"	*1705198
16	Shock Cord - 11-1/2"	1122332
17	Roll Tube End Cap - Front	*1121041

*Used with 3" roll tubes.
**Comes with protective stretch cord cover (P/N 1107680).

Table of Contents

Replacement Parts

RIDGE STRAPS 1" GALVANIZED

	DESCRIPTION	P/N
	KITS & HARDWARE	
	Ridge Strap Kit w/Anchor - 1" x 25' [Includes: A; 2; 5]	1101685
	Ridge Strap Kit w/Anchor - 1" x 39' [Includes: A; 2; 5]	1101686
	Ridge Strap Kit w/Anchor - 1" x 46' [Includes: A; 2; 5]	1101687
	Ridge Strap Kit w/Anchor - 1" x 56' [Includes: A; 2; 5]	1107068
	Ridge Strap Kit w/Hook - 1" x 46' [Includes: 1; 4]	*1101833
	Ridge Strap Kit w/Hook - 1" x 56' [Includes: 1; 4]	*1120454
A	Ridge Strap Hdw - 1" [Includes: 2 of 6, 7, 8 & 9]	1105244
B	Eyebolt Hdw. [Includes 2 of 10, 11 & 12]	1101689
	PARTS	
1	Ratchet w/1" Ridge Strap/Hook	1106153
2	Ratchet w/1" Ridge Strap/Anchor	1101678
3	Ratchet - 1" Web	1700836
4	Ridge Strap w/Hook - 1" x 10'	1118520
	Ridge Strap w/Hook - 1" x 14'	1118522
	Ridge Strap w/Hook - 1" x 18'	1121406
	Ridge Strap w/Hook - 1" x 24'	1118524
	Ridge Strap w/Hook - 1" x 46'	1101835
	Ridge Strap w/Hook - 1" x 56'	1116163
5	Ridge Strap w/Anchor - 1" x 25'	1101680
	Ridge Strap w/Anchor - 1" x 39'	1101681
	Ridge Strap w/Anchor - 1" x 46'	1101682
	Ridge Strap w/Anchor - 1" x 56'	1107066
6	Self-Tapping Screw - 3/8" x 1"	1700400
7	Anchor Bushing	1101683
8	Flat Washer - 3/8" - SAE	1701176
9	Centerlock Hex Nut - 3/8"	1700418
10	Eyebolt Anchor - 5/16"	1700717
11	Hex Nut - 5/16"	1700411
12	Nylon Lock Hex Nut - 5/16"	1700419

*Eyebolt NOT included.

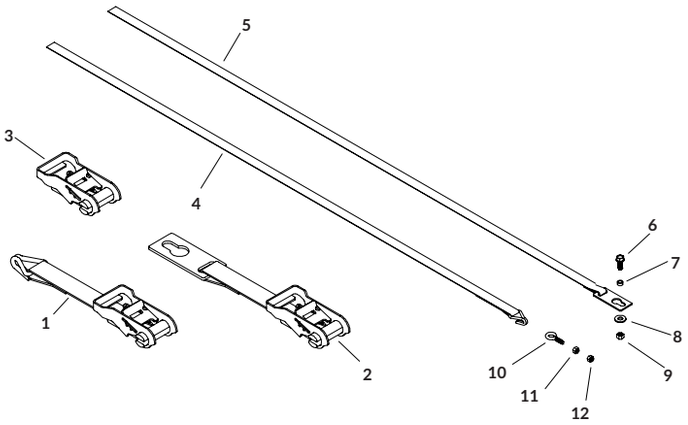

RIDGE STRAPS 2" GALVANIZED

	DESCRIPTION	P/N
	KITS & HARDWARE	
	Ridge Strap Kit w/Anchor - 2" x 25' [Includes: A; 2; 5]	1100783
	Ridge Strap Kit w/Anchor - 2" x 39' [Includes: A; 2; 5]	1100784
	Ridge Strap Kit w/Anchor - 2" x 46' [Includes: A; 2; 5]	1100774
	Ridge Strap Kit w/Anchor - 2" x 56' [Includes: A; 2; 5]	1107069
	Ridge Strap Kit w/Hook - 2" x 46' [Includes: 1; 4]	*1111823
A	Ridge Strap Hdw. - 2" [Includes: 2 of 6, 7 & 8; 4 of 9, 10, 11 & 12]	1105242
B	Eyebolt Hdw. [Includes: 2 of 13, 14 & 15]	1101689
	PARTS	
1	Ratchet w/2" Ridge Strap/Hook	1111818
2	Ratchet w/2" Ridge Strap/Anchor	1100594
3	Ratchet - 2" Web	1700519
4	Ridge Strap w/Hook - 2" x 48'	1111817
5	Ridge Strap w/Anchor - 2" x 25'	1100571
	Ridge Strap w/Anchor - 2" x 39'	1100579
	Ridge Strap w/Anchor - 2" x 48'	1100580
	Ridge Strap w/Anchor - 2" x 56'	1107067
6	Self-Tapping Screw - 3/8" x 1"	1700400
7	Lock Washer - 3/8"	1700434
8	Hex Nut - 3/8"	1700407
9	Hex Head Cap Screw - 1/4" x 1"	1700381
10	Box Hook - 3/8" x 3-1/4"	1700682
11	Lock Washer - 1/4"	1700436
12	Hex Nut - 1/4"	1700408
13	Eyebolt Anchor - 5/16"	1700717
14	Hex Nut - 5/16"	1700411
15	Nylon Lock Hex Nut - 5/16"	1700419

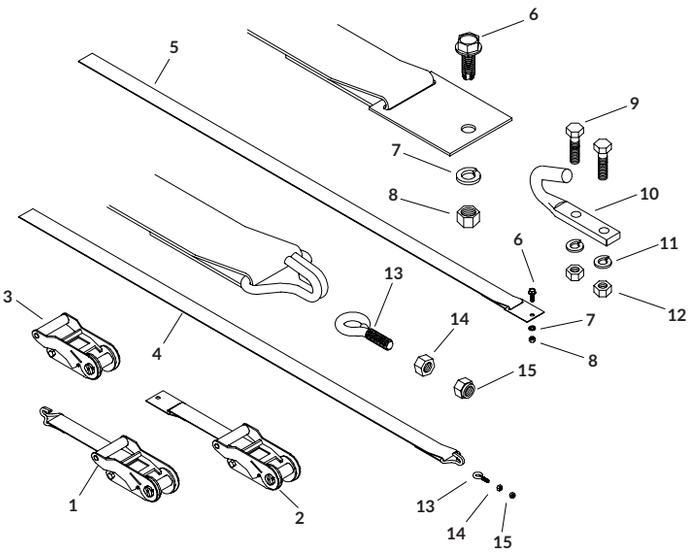

*Eyebolt NOT included.

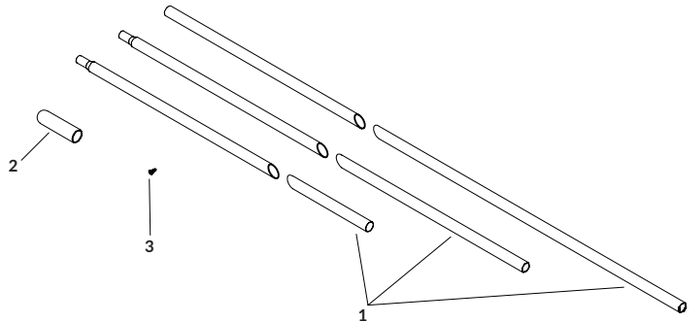

RIDGEPOLES

	DESCRIPTION	P/N
	HARDWARE	
A	Roll away Ridgepole Hdw. [Includes: 2 of 2 & 3]	1105310
	PARTS	
1	Ridgepole Tube - 8'	1706159
	Ridgepole Tube - 11'	1706158
	Ridgepole Tube - 15'	1706157
	Ridgepole Tube - 16'	1701204
	Ridgepole Tube - 20'	1701205
	Ridgepole Tube - 24'	1701206
2	Protective Cap - 1-1/2" ID x 7-7/8"	1700212
3	Flat-Headed Self-Drilling Screw - 1/4" x 3/4"	1704768

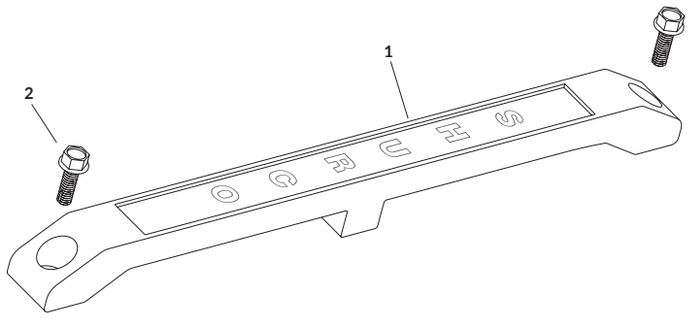

ROLL TUBE DEFLECTORS

	DESCRIPTION	P/N
	KITS	
	Roll Tube Deflector Kit (1) - Black [Includes: 1; 2 of 2]	1117514
	Roll Tube Deflector Kit (2) - Black [Includes: 1; 2 of 2]	1114659
	Roll Tube Deflector Kit (1) - Gray [Includes: 1; 2 of 2]	1117513
	Roll Tube Deflector Kit (2) - Gray [Includes: 1; 2 of 2]	1114579
	PARTS	
1	Roll Tube Deflector - Black - 17-1/4"	1114658
	Roll Tube Deflector - Gray - 17-1/4"	1112029
2	Self-Tapping Screw - 5/16" x 1"	1701059

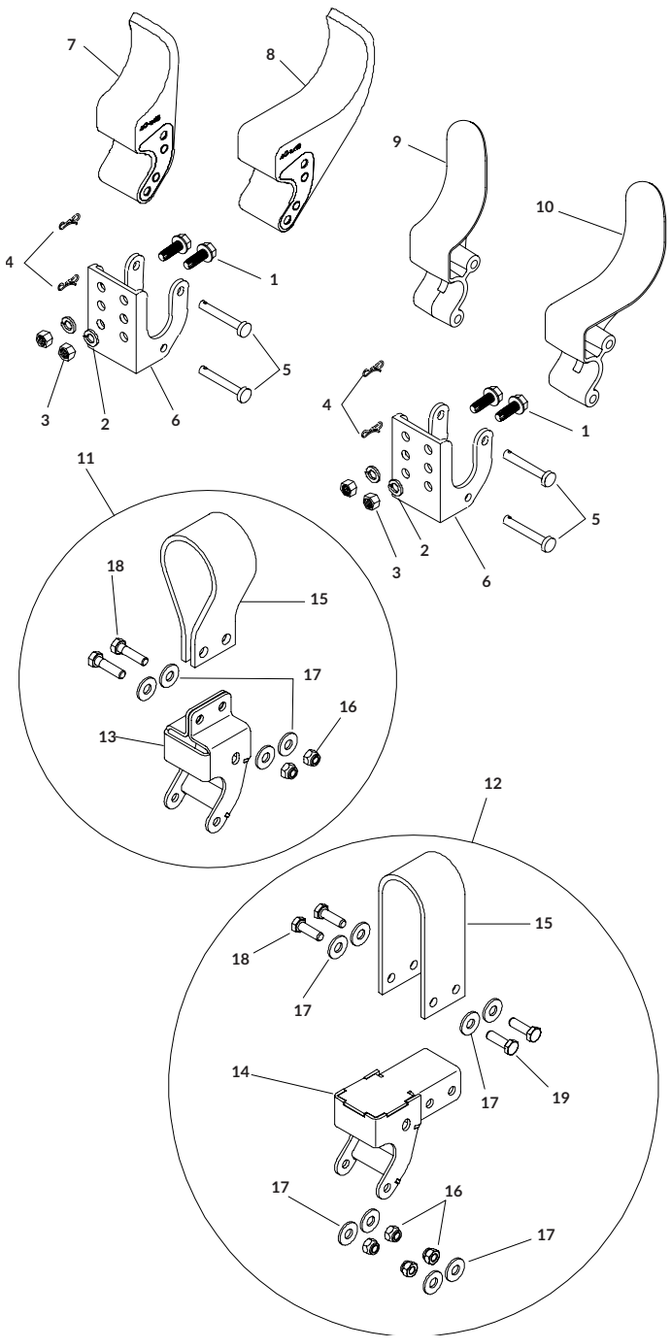

TARP STOPS

	DESCRIPTION	P/N
	KITS & HARDWARE	
	EOF Alum Tarp Stop w/Hdw. [Includes: A; B; 6; 7]	1124780
	EOF Flexible Tarp Stop w/Hdw. [Includes: A; B; 6; 9]	1114047
	EOF Belt Flex Tarp Stop w/Hdw. [Includes: A; B; 6; 11]	1122278
	EOF Alum 6" Offset Tarp Stop w/Hdw. [Includes: A; B; 6; 8]	1124783
	EOF Flexible 6" Offset Tarp Stop w/Hdw. [Includes: A; B; 6; 10]	1114388
	EOF Belt Flex 6" Offset Tarp Stop w/Hdw. [Includes: A; B; 6; 12]	1123798
A	Bowtie Cotter Pin/Ring Assy. [Includes: 2 of 4 & 5]	1118389
B	Mounting Fasteners (2) [Includes: 2 of 1, 2 & 3]	1118592
	PARTS	
1	Self-Tapping Screw - 3/8" x 1"	1700400
2	Lock Washer - 3/8"	1700434
3	Hex Nut - 3/8"	1700407
4	Bowtie Cotter Pin - 1-3/8"	1704380
5	Clevis Pin - 5/16" x 2-7/8"	1703604
6	EOF Tarp Stop Body	1100833
7	EOF Alum Tarp Stop Upright	1705775
8	EOF Alum 6" Offset Tarp Stop Upright	1705454
9	EOF Flexible Tarp Stop Upright	1115216
10	EOF Flexible 6" Offset Tarp Stop Upright	1115217
11	EOF Belt Flex Tarp Stop Upright	1122260
12	EOF Belt Flex 6" Offset Tarp Stop Upright	1123455
13	Tarp Stop Upright Bracket	1122259
14	Tarp Stop Upright Bracket - Offset	1123454
15	Rubber Belting - .20" x 2" x 12"	1122237
16	Nylon Lock Hex Nut - 5/16"	1700419
17	Flat Washer - 5/16"	1700428
18	Hex Head Cap Screw - 5/16" x 1-1/4"	1701208
19	Hex Head Cap Screw - 5/16" x 1"	1704416

TARP TUBES

	DESCRIPTION	P/N
	KITS & HARDWARE	
	U-Clamp Kit 2" - (3) [Includes: 3 of 8 & 9]	1115966
	U-Clamp Kit 2" - (8) [Includes: 8 of 8 & 9]	1118643
	U-Clamp Kit 2" - (10) [Includes: 10 of 8 & 9]	1118644
	U-Clamp Kit 2" - (14) [Includes: 14 of 8 & 9]	1118663
	U-Clamp Kit 3" - (3) [Includes: 3 of 8 & 9]	1126790
	U-Clamp Kit 3" - (8) [Includes: 8 of 8 & 9]	1126791
	U-Clamp Kit 3" - (10) [Includes: 10 of 8 & 9]	1126792
	U-Clamp Kit 3" - (14) [Includes: 14 of 8 & 9]	1126793
	Manual Crank Kit - 3" [Includes: A; 16; 18; 21]	1122879
A	Drive Shaft Hdw - 3" [Includes: 14; 15; 17; 19; 20; 3 of 22]	1131569
B	Fixed Tube Hdw [Includes: 2 of 12 & 13]	1115112
	PARTS	
1	Roll Tube w/Spline - 2" x 8'	1128148
	Roll Tube w/Spline - 2" x 11'-8"	1128147
	Roll Tube w/Spline - 2" x 12'-9"	1119118
	Roll Tube w/Spline - 2" x 16'	1107057
	Roll Tube w/Spline - 2" x 20'	1107058
	Roll Tube w/Spline - 2" x 24'	1107059
2	Roll Tube - 2" x 8'	1706153
	Roll Tube - 2" x 11'	1706152
	Roll Tube - 2" x 15'	1706151
	Roll Tube - 2" x 16'	1700048
	Roll Tube - 2" x 20'	1700046
	Roll Tube - 2" x 24'	1701427
3	Fixed Tube - 1-1/8" x 8'	1706156
	Fixed Tube - 1-1/8" x 11'	1706155
	Fixed Tube - 1-1/8" x 15'	1706154
	Fixed Tube - 1-1/8" x 16'	1700051
	Fixed Tube - 1-1/8" x 20'	1700049
	Fixed Tube - 1-1/8" x 24'	1701428
4	Alum Roll Tube - 3" x 12'	1118639
	Alum Roll Tube - 3" x 16'	1704439
	Alum Roll Tube - 3" x 20'	1704398
	Alum Roll Tube - 3" x 24'	1704236
5	Alum Splice Tube - 3"	1704863
6	Roll Tube Swaged Connector	1107076
7	Fixed Tube Swaged Connector	1107077
8	Plastic U-Clamp	1701354
9	Self-Drilling Screw - 1/4" x 3/4"	1700398
	Self-Drilling Screw - 1/4" x 1"	1705198
10	Spline Shaft Replacement - 2" x 9"	1107260
	Spline Shaft Replacement - 2" x 13"	1117670
	Spline Shaft Replacement - 2" x 21"	1120107
11	Spline Shaft w/o Connector Tube	1701244
12	Plastic End Plug	1700523
13	Flat-Headed Self-Drilling Screw - 1/4" x 3/4"	1704768
14	Carriage Bolt - 5/16" x 1" - GR5	1704237
15	Cartridge Clamp	1118194
16	Rear Cartridge	1121039
17	Nylon Lock Nut - 5/16"	1704297
18	Roll Tube End Cap - Rear	1121040
19	Hex Head Cap Screw - 3/8" x 2"	1704264
20	Nylon Lock Nut - 3/8"	1701580
21	Manual Crank Spline - 3"	1121111
22	Self-Drilling Screw - 1/4" x 1"	1705198

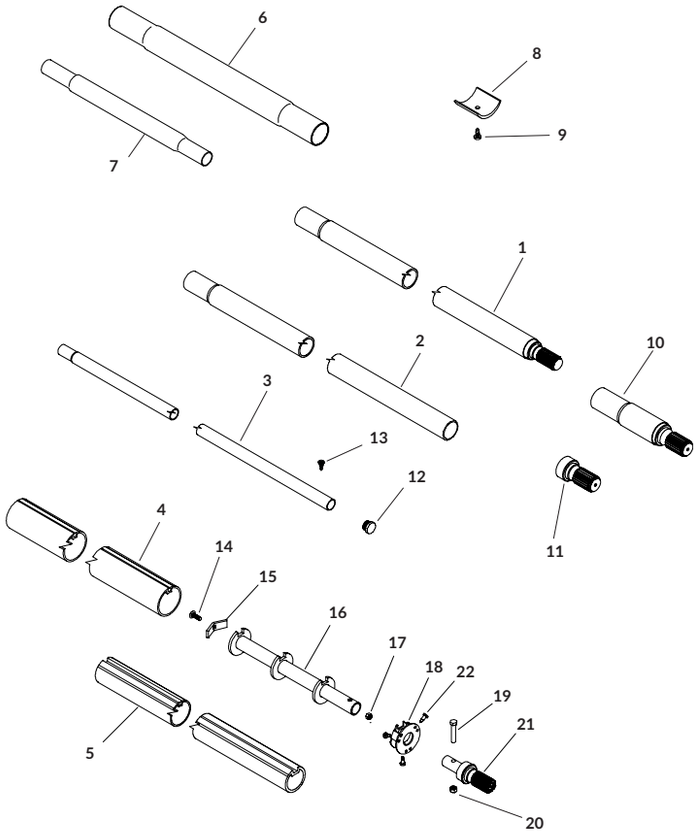

Table of Contents

Replacement Parts

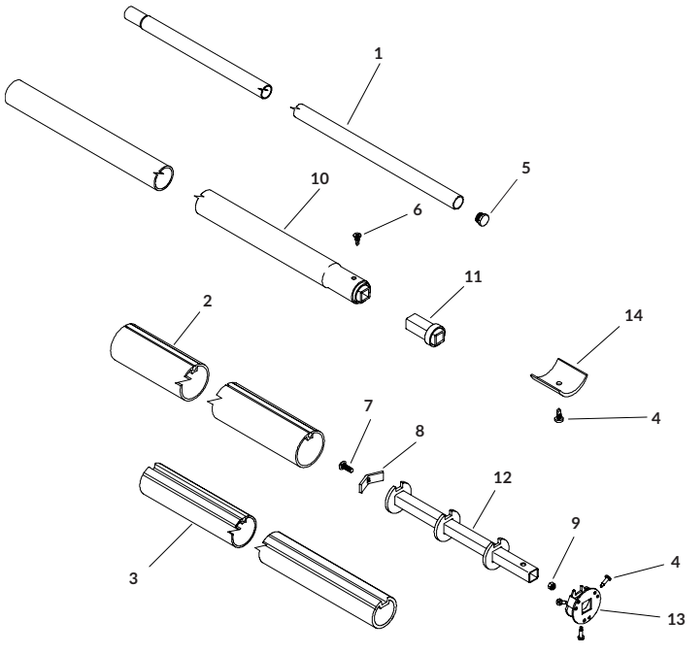

USE W/BELT N' RATCHET - TARP TUBES

	DESCRIPTION	P/N
	KITS & HARDWARE	
	Manual Crank Kit - 3" Aluminum Roll Tube w/Square Key [Includes: 7; 8; 9; 13; 14; 3 of 4]	1124899
	Fixed Tube Hdw [Includes: 2 of 5 & 6]	1115112
	PARTS	
1	Fixed Tube - 1-1/8" x 8'	1706156
	Fixed Tube - 1-1/8" x 11'	1706155
	Fixed Tube - 1-1/8" x 15'	1706154
	Fixed Tube - 1-1/8" x 16'	1700051
	Fixed Tube - 1-1/8" x 20'	1700049
	Fixed Tube - 1-1/8" x 24'	1701428
2	Alum Roll Tube - 3" x 12'	1118639
	Alum Roll Tube - 3" x 16'	1704439
	Alum Roll Tube - 3" x 20'	1704398
	Alum Roll Tube - 3" x 24'	1704236
3	Alum Splice Tube - 3"	1704863
4	Self-Drilling Screw - 1/4" x 1"	1705198
5	Plastic End Plug	1700523
6	Flat-Headed Self-Drilling Screw - 1/4" x 3/4"	1704768
7	Carriage Bolt - 5/16" x 1" - GR5	1704237
8	Cartridge Clamp	1118194
9	Nylon Lock Nut - 5/16"	1704297
10	Roll Tube w/Square Key - 2" x 8'	1105174
	Roll Tube w/Square Key - 2" x 11'	1128150
	Roll Tube w/Square Key - 2" x 15'	1128149
	Roll Tube w/Square Key - 2" x 16'	1105132
	Roll Tube w/Square Key - 2" x 20'	1105131
	Roll Tube w/Square Key - 2" x 24'	1105124
11	Roll Tube Square Key Replacement	1105033
12	Rear Cartridge w/Square Key	1124893
13	Roll Tube End Cap - Rear w/Square Key	1124896
14	Plastic U-Clamp	1701354

Table of Contents

Replacement Parts

FASTENERS

DESCRIPTION	P/N	CASE
Self-Tapping Screw - 3/8" x 1"	1700400	840
Plastic U-Clamp	1701354	1500
Self-Drilling Screw - 1/4" x 3/4"	1700398	2500
Clevis Pin - 5/16" x 2-7/8"	1703604	200
Bow tie Cotter Pin - 1-3/8"	1704380	200

LATCHPLATES

DESCRIPTION	P/N	CASE
Alum Side Mount Latchplate - 4'	1100749	100
Alum Side Mount Latchplate - 6'	1700802	100
Alum Side Mount Latchplate - 8'	1700522	100

TARP STOPS

DESCRIPTION	P/N	CASE
EOF Tarp Stop Body	1100833	100
EOF Alum Tarp Stop Upright	1705775	50
EOF Alum 6" Offset Tarp Stop Upright	1705454	35
EOF Flexible 6" Offset Tarp Stop Upright	1115217	60
EOF Flexible Tarp Stop Upright	1115216	100
EOF Alum Tarp Stop w/Hdw	1124780	75
EOF Alum 6" Offset Tarp Stop w/Hdw	1124783	50
EOF Flexible Tarp Stop w/Hdw	1114047	50
EOF Flexible 6" Offset Tarp Stop w/Hdw	1114388	50

TARP TUBES

DESCRIPTION	P/N	CASE
Roll Tube - 2" x 8'	1706153	50
Roll Tube - 2" x 11'	1706152	50
Roll Tube - 2" x 15'	1706151	50
Roll Tube - 2" x 16'	1700048	50
Roll Tube - 2" x 20'	1700046	50
Roll Tube - 2" x 24'	1701427	50
Fixed Tube - 1-1/8" x 8'	1706156	100
Fixed Tube - 1-1/8" x 11'	1706155	100
Fixed Tube - 1-1/8" x 15'	1706154	100
Fixed Tube - 1-1/8" x 16'	1700051	100
Fixed Tube - 1-1/8" x 20'	1700049	100
Fixed Tube - 1-1/8" x 24'	1701428	100
Ridgepole Tube - 8'	1706159	50
Ridgepole Tube - 11'	1706158	50
Ridgepole Tube - 15'	1706157	50
Ridgepole Tube - 16'	1701204	50
Ridgepole Tube - 20'	1701205	50
Ridgepole Tube - 24'	1701206	50

WIRE - DUAL CONDUCTOR

DESCRIPTION	P/N	CASE
Dual-Conductor Wire - 6 Ga. (500')	1705995	500
Dual-Conductor Wire - 6 Ga. (1800')	1132341	1800
Dual-Conductor Wire - 4 Ga. (per foot)	1705107	1250

Table of Contents

Replacement Parts

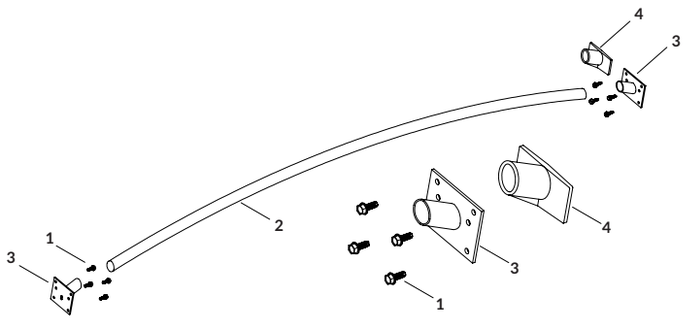

BOWS - DURABOWS™

	DESCRIPTION	P/N
	KITS & HARDWARE	
	Durabow™ Bow Kit - 97" - Steel [Includes: A; 2; 2 of 3]	1123544
	Durabow™ Bow Kit - 102" - Steel [Includes: A; 2; 2 of 3]	1123541
	Durabow™ Bow Kit - 97" - Alum. [Includes: A; 2; 2 of 4]	1123545
	Durabow™ Bow Kit - 102" - Alum. [Includes: A; 2; 2 of 4]	1123542
	Bow Bracket Kit - Durabow™ - Steel [Includes: A; 2 of 3]	1110653
	Bow Bracket Kit - Durabow™ - Alum. [Includes: A; 2 of 4]	1124624
A	Bow Mtg. Hdw. - Durabow™	1115971
	PARTS	
1	Self-Tapping Screw - 3/8" x 1"	1700400
2	Durabow™ - 97"	1705128
	Durabow™ - 102"	1705129
	Replacement Flexbow®	*1702857
3	Durabow™ Bracket - Steel	*1122932
4	Durabow™ Bracket - Alum.	1705324

*Durabow™ steel brackets are a fit-all bracket for both Flexbow® and Durabow™. Original steel Flexbow® brackets are zinc plated; steel Durabow™ brackets are yellow plated. Durabows will NOT slide into original Flexbow® steel brackets. When ordering P/N 1702857 replacement Flexbow®, please order P/N 1123544 or P/N 1123541 Durabow™ bow kits, which include Durabow™ steel brackets.

NOTE: Durabows are NOT recommended for low-rise applications.

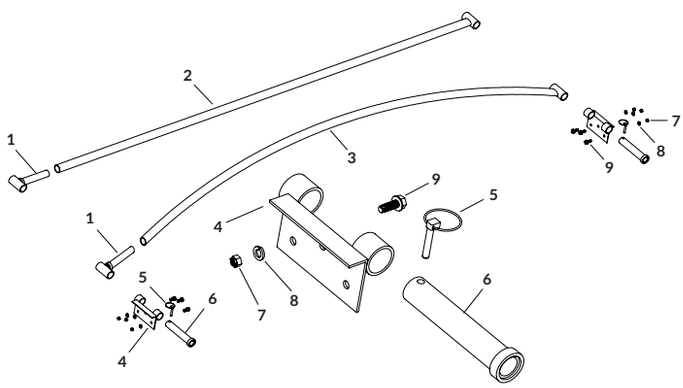

BOWS - HEAVY-DUTY

	DESCRIPTION	P/N
	KITS & HARDWARE	
	Heavy-Duty Bow Kit - Flat [Includes: A; 2]	1112667
	Heavy-Duty Bow Kit - 3" Rise [Includes: A; 3]	1126917
	Heavy-Duty Bow Kit - 8" Rise [Includes: A; 3]	1106615
	Heavy-Duty Bow Kit - 12" Rise [Includes: A; 3]	1102697
A	Heavy-Duty Bow Bracket Kit [Includes: B; 1; 2 of 4 & 6]	1107245
B	Heavy-Duty Bow Mtg. Hdw. [Includes: 2 of 5; 6 of 7, 8 & 9]	1107244
	PARTS	
1	Heavy-Duty Bow Shank	1104706
2	Heavy-Duty Bow - Flat	1112669
3	Heavy-Duty Bow - 3" Rise	1123052
	Heavy-Duty Bow - 8" Rise	1106612
	Heavy-Duty Bow - 12" Rise	1101927
4	Heavy-Duty Bow Bracket	1106614
5	Lynch Pin - 5/16" x 1-3/4"	1701098
6	Heavy-Duty Bow Pin	1104123
7	Hex Nut - 3/8"	1700407
8	Lock Washer - 3/8"	1700434
9	Self-Tapping Screw - 3/8" x 1"	1700400

Table of Contents

Replacement Parts

CRANK ARMS - GALVANIZED TELESCOPING

	DESCRIPTION	P/N
	KITS	
	Galv. Telescoping Crank w/Flex Jnt - 8'3" to 11'6" [Includes: A; 10]	1123817
	Galv. Telescoping Crank w/Flex Jnt - 9'7" to 12'10" [Includes: B; 10]	1123821
	Galv. Telescoping Crank w/Flex Jnt - 14'3" to 17' [Includes: C; 10]	1123825
A	Galv. Telescoping Crank - 8'3" to 11'6" [Includes: D; 1; 2; 3]	1123818
B	Galv. Telescoping Crank - 9'7" to 12'10" [Includes: E; 1; 2; 3]	1123822
C	Galv. Telescoping Crank - 14'3" to 17' [Includes: F; 1; 2; 3]	1123826
D	Galv. Crank Arm w/Bearings - 90" [Includes: 6; 7; 9; 2 of 5]	1124840
E	Galv. Crank Arm w/Bearings - 106" [Includes: 6; 7; 9; 2 of 5]	1124842
F	Galv. Crank Arm w/Bearings - 147" [Includes: 6; 7; 9; 2 of 5]	1124844
	PARTS	
1	Galv. Hex Arm - 51"	1123830
	Galv. Hex Arm - 60"	1123831
2	Hex Head Cap Screw - 3/8" x 1-3/4"	1700369
3	Centerlock Hex Nut - 3/8"	1700418
4	Crank Arm Flex Holder	1123856
5	Crank Arm Bearing	1705197
6	Spring Pin - 1/4" x 1-1/4"	1704098
7	Spring Clip - Qty 2	1123897
8	Crank Arm End Plug	1701357
9	Galv Crank Arm - 90"	1123843
	Galv Crank Arm - 106"	1123847
	Galv Crank Arm - 204"	1123851
10	Flex Arm Joint Assy - 12"	1118722

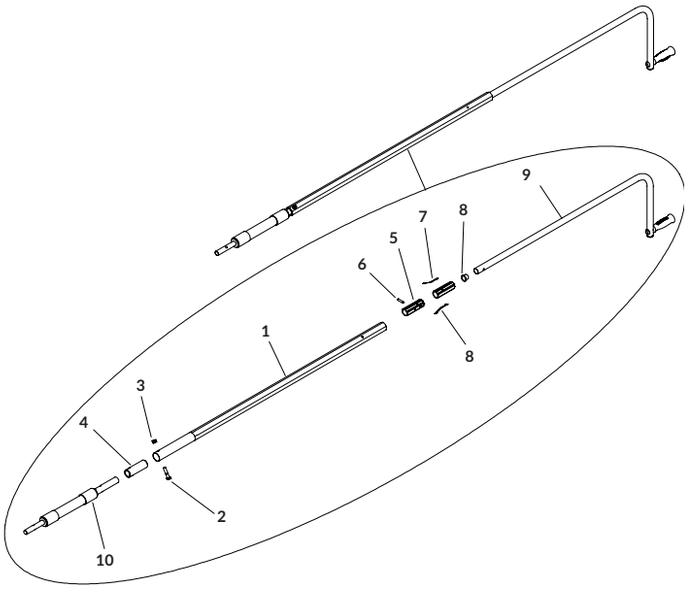

CRANK RETAINERS

	DESCRIPTION	P/N
	KITS	
	Telescoping Crank Retainer Kit [Includes: A; 2; 5; 6]	1123756
	Telescoping Crank Retainer Kit w/3" Standoff [Includes: A; 7; 8; 9; 2 of 2, 5 & 6]	1123757
	Telescoping Crank Retainer Kit w/7" Standoff [Includes: A; 7; 8; 9; 2 of 2, 5 & 6]	1123758
	Telescoping Crank Retainer Kit w/11" Standoff [Includes: A; 7; 8; 9; 2 of 2, 5 & 6]	1123759
A	Telescoping Crank Retainer Assy [Includes: 1; 3; 4]	1123754
	PARTS	
1	Stainless Snap lock Retainer	1130839
2	Self-Tapping Screw - 3/8" x 1"	1700400
3	Cable w/#5 Interlock Snap	1100574
4	Wire Lock Pin - 5/16" x 1-1/2" - SS	1706506
5	Lock Washer - 3/8"	1700434
6	Hex Nut - 3/8"	1700407
7	Retainer Bushing - 11/16"	1100306
8	Flange Cap Screw - 1/2" x 1-1/4"	1702996
9	Crank Retainer Standoff - 3"	1107080
	Crank Retainer Standoff - 7"	1100033
	Crank Retainer Standoff - 11"	1109478

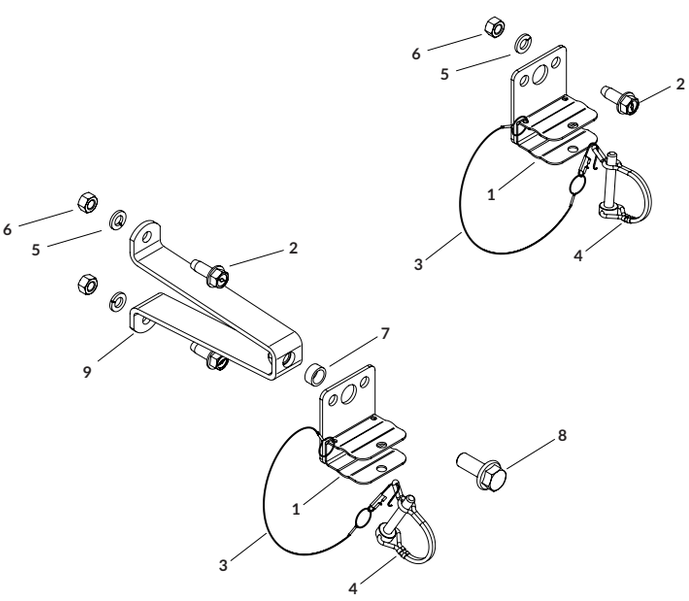

Table of Contents

Replacement Parts

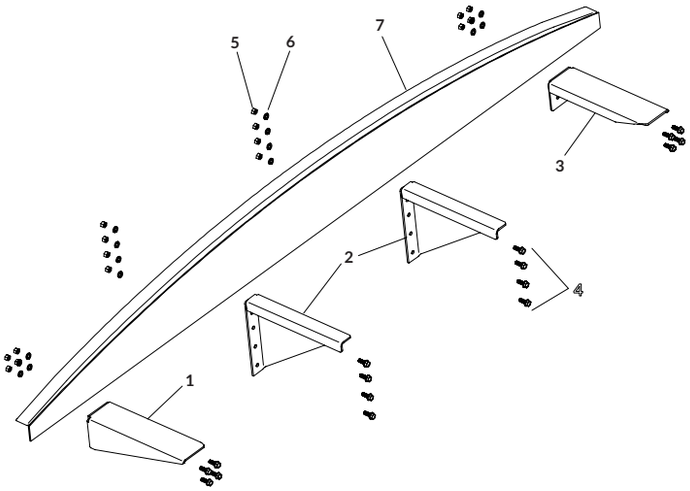

END CAPS - ALUMINUM INVERTED

	DESCRIPTION	P/N
	HARDWARE	
	Mounting Fasteners (8) [Includes: 8 of 4, 5 & 6]	1119158
	PARTS	
1	Cap/Cable Support - L	1124443
2	Cap/Cable Support - Center	1123552
3	Cap/Cable Support - R	1124444
4	Self-Tapping Screw - 3/8" x 1"	1700400
5	Hex Nut - 3/8"	1700407
6	Lock Washer - 3/8"	1700434
	FRONT/BACK CAPS	
7	Alum. Inverted Cap - 6" Rise x 93.50"	1125751
	Alum. Inverted Cap - 6" Rise x 95"	1125749
	Alum. Inverted Cap - 6" Rise x 100.50"	1125750

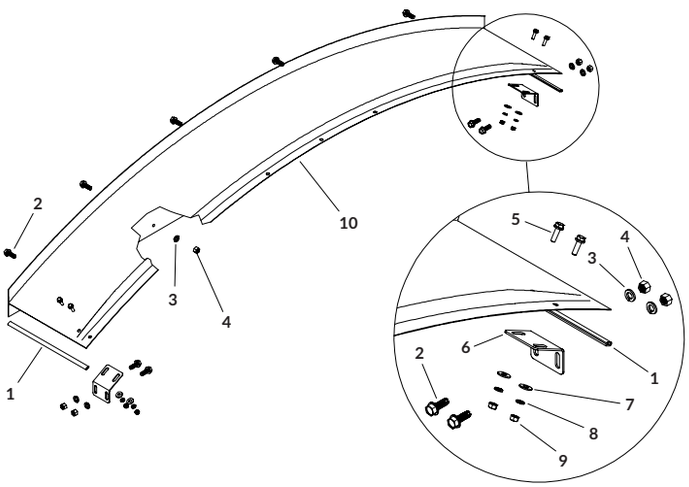

END CAPS - GALVANIZED FACE MOUNT

	DESCRIPTION	P/N
	HARDWARE	
	Cap Mtg. Hdw. w/Edge Trim [Includes: A; 1]	1118595
A	Cap Mtg. Hdw. - Bolt Kit [Includes: 4 of 5, 7, 8 & 9; 9 of 2, 3 & 4]	1118594
	PARTS	
1	Edge Trim - 30"	1118596
2	Self-Tapping Screw - 3/8" x 1"	1700400
3	Lock Washer - 3/8"	1700434
4	Hex Nut - 3/8"	1700407
5	Flange Screw - 5/16" x 1"	1704441
6	End Cap Face Mt. Bracket - 6" Rise	1130241
	End Cap Face Mt. Bracket - 10" Rise	1130242
7	Flat Washer - 5/16"	1700428
8	Lock Washer - 5/16"	1700433
9	Hex Nut - 5/16"	1700411
	FRONT/BACK CAPS	
10	Galv. Face Mt. Cap - 6" Rise x 14" x 89"	1118896
	Galv. Face Mt. Cap - 6" Rise x 14" x 93"	1118804
	Galv. Face Mt. Cap - 6" Rise x 14" x 95"	1118613
	Galv. Face Mt. Cap - 6" Rise x 14" x 101"	1118614
	Galv. Face Mt. Cap - 10" Rise x 14" x 89"	1118892
	Galv. Face Mt. Cap - 10" Rise x 14" x 93"	1118800
	Galv. Face Mt. Cap - 10" Rise x 14" x 95"	1118605
	Galv. Face Mt. Cap - 10" Rise x 14" x 101"	1118606

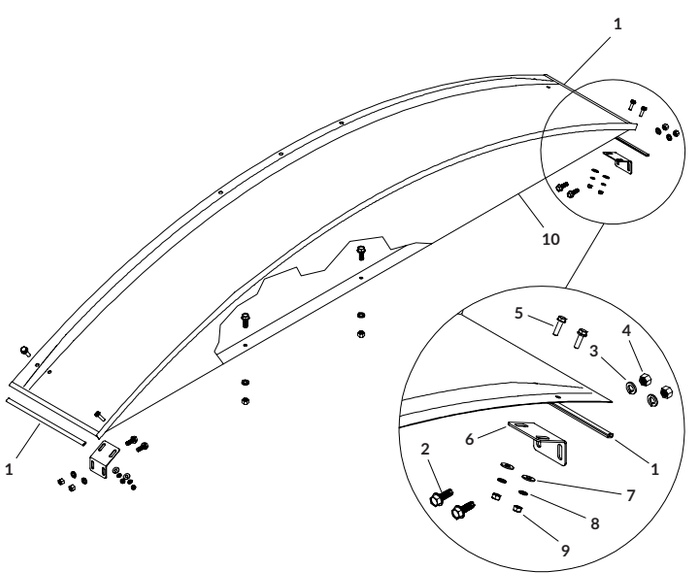

END CAPS - GALVANIZED TOP MOUNT

	DESCRIPTION	P/N
	HARDWARE	
	Cap Mtg Hdw w/Edge Trim [Includes: A; 1]	1118595
A	Cap Mtg Hdw - Bolt Kit [Includes: 4 of 5, 7, 8 & 9; 9 of 2, 3 & 4]	1118594
	PARTS	
1	Edge Trim - 30"	1118596
2	Self-Tapping Screw - 3/8" x 1"	1700400
3	Lock Washer - 3/8"	1700434
4	Hex Nut - 3/8"	1700407
5	Flange Screw - 5/16" x 1"	1704441
6	End Cap Face Mt Bracket - 6" Rise	1130241
	End Cap Face Mt Bracket - 10" Rise	1130242
7	Flat Washer - 5/16"	1700428
8	Lock Washer - 5/16"	1700433
9	Hex Nut - 5/16"	1700411
	FRONT/BACK CAPS	
10	Galv Top Mt Cap - 6" Rise x 14" x 89"	1118894
	Galv Top Mt Cap - 6" Rise x 14" x 93"	1118807
	Galv Top Mt Cap - 6" Rise x 14" x 95"	1118615
	Galv Top Mt Cap - 6" Rise x 14" x 101"	1118616
	Galv Top Mt Cap - 10" Rise x 14" x 89"	1118888
	Galv Top Mt Cap - 10" Rise x 14" x 93"	1118803
	Galv Top Mt Cap - 10" Rise x 14" x 95"	1118608
	Galv Top Mt Cap - 10" Rise x 14" x 101"	1118609

RATCHET/CABLE ASSEMBLIES

	DESCRIPTION	P/N
	KITS & HARDWARE	
	Ratchet Strap - 18"/Galv Cable Kit - 139" [Includes: A; C; 4]	1118993
	Ratchet Strap - 42"/Galv Cable Kit - 139" [Includes: B; C; 4]	1118995
A	Ratchet Strap Assy - 18" X 1" [Includes: 5; 6; 8]	1129609
B	Ratchet Strap Assy - 42" X 1" [Includes: 5; 6; 8]	1129610
C	Ratchet Hdw. [Includes: 3; 2 of 7 & 9; 3 of 2; 4 of 1]	1118598
	PARTS	
1	Hex Nut - 3/8"	1700407
2	Lock Washer - 3/8"	1700434
3	Hex Head Cap Screw - 3/8" x 2-1/2"	1702573
4	Galvanized Cable - 139"	1704295
5	Ratchet Strap - 18" X 1"	1129611
	Ratchet Strap - 42" X 1"	1129612
6	Ratchet Handle - 1"	1706493
7	Self-Tapping Screw - 3/8" x 1"	1700400
8	Adjustable Ratchet Bracket	1129613
9	Fender Washer - .406" ID x 2" OD	1128751

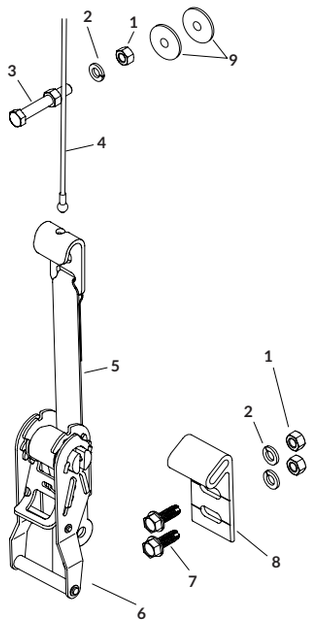

RIDGE STRAPS

	DESCRIPTION	P/N
	KITS	
	Ridge Strap Kit w/Hook - 1" x 10' [Includes: 1; 2]	1118521
	Ridge Strap Kit w/Hook - 1" x 14' [Includes: 1; 2]	1118523
	Ridge Strap Kit w/Hook - 1" x 18' [Includes: 1; 2]	1121405
	Ridge Strap Kit w/Hook - 1" x 24' [Includes: 1; 2]	1118525
	PARTS	
1	Ratchet w/1" Ridge Strap	1118511
2	Ridge Strap w/Hook - 1" x 10'	1118520
	Ridge Strap w/Hook - 1" x 14'	1118522
	Ridge Strap w/Hook - 1" x 18'	1121406
	Ridge Strap w/Hook - 1" x 24'	1118524

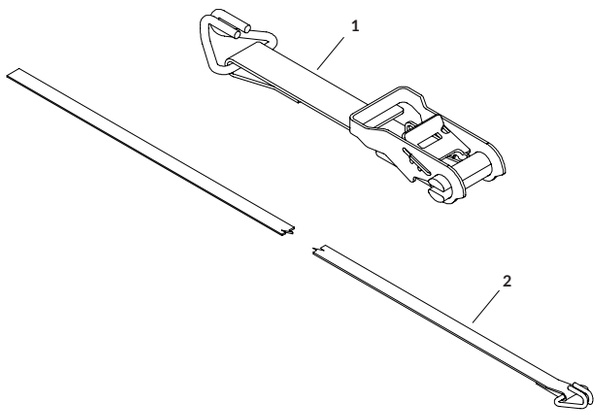

TARP SPOOL ASSEMBLIES

	DESCRIPTION	P/N
	KITS & HARDWARE	
	Alum. Roll Tube w/Cartridges Installed - 12' [Includes: 7; 9; 10]	
	Alum. Roll Tube w/Cartridges Installed - 16' [Includes: 7; 9; 10]	
	Alum. Roll Tube w/Cartridges Installed - 20' [Includes: 7; 9; 10]	
	Alum. Roll Tube w/Cartridges Installed - 24' [Includes: 7; 9; 10]	
	Spool & Spring Kit - 3" [Includes: A; 4; 6; 12; 13]	1131363
A	Spool Mtg. Hdw. [Includes: 5; 2 of 1, 2 & 3]	1118260
	PARTS	
1	Hex Head Cap Screw - 5/16" x 1-3/4"	1701468
2	Cartridge Spacer	1118228
3	Top Lock Hex Nut - 5/16"	1702492
4	Rear Cable Spool - 3" R	1704373
5	O-Ring Seal Kit (Includes 2 O-Rings)	1123955
6	Rear Spring - Red	1118229
7	Rear Cartridge Assy - 15" Red	1123953
8	Rear Cartridge Assy - 33" Red	1130673
9	Roll Tube	*
10	Front Cartridge Assy - 15" Black	1123952
11	Front Cartridge Assy - 33" Black	1130674
12	Front Spring - Black	1118230
13	Front Cable Spool - 3" L	1704372

*Box length needed in inches. For aluminum roll tube pricing, see Tarp Tube pricing chart.

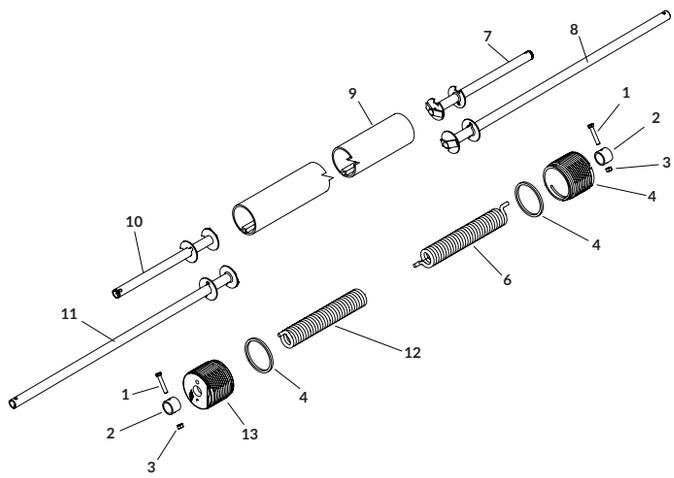

Table of Contents

Replacement Parts

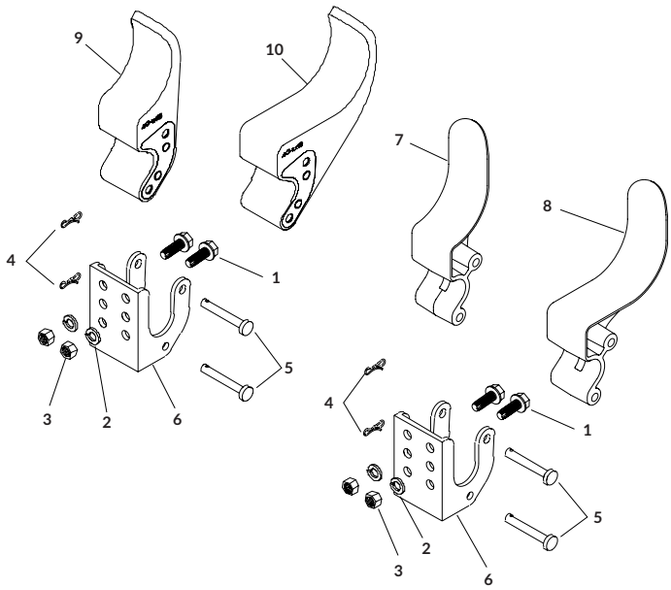

TARP STOPS

	DESCRIPTION	P/N
	KITS & HARDWARE	
	EOF Alum Tarp Stop w/Hdw. [Includes: A; B; 6; 7]	1124780
	EOF Flexible Tarp Stop w/Hdw. [Includes: A; B; 6; 9]	1114047
	EOF Alum 6" Offset Tarp Stop w/Hdw. [Includes: A; B; 6; 8]	1124783
	EOF Flexible 6" Offset Tarp Stop w/Hdw. [Includes: A; B; 6; 10]	1114388
A	Bowtie Cotter Pin/Ring Assy [Includes: 2 of 4 & 5]	1118389
B	Mounting Fasteners (2) [Includes: 2 of 1, 2 & 3]	1118592
	PARTS	
1	Self-Tapping Screw - 3/8" x 1"	1700400
2	Lock Washer - 3/8"	1700434
3	Hex Nut - 3/8"	1700407
4	Bowtie Cotter Pin - 1-3/8"	1704380
5	Clevis Pin - 5/16" x 2-7/8"	1703604
6	EOF Tarp Stop Body	1100833
7	EOF Alum Tarp Stop Upright	1705775
8	EOF Alum 6" Offset Tarp Stop Upright	1705454
9	EOF Flexible Tarp Stop Upright	1115216
10	EOF Flexible 6" Offset Tarp Stop Upright	1115217

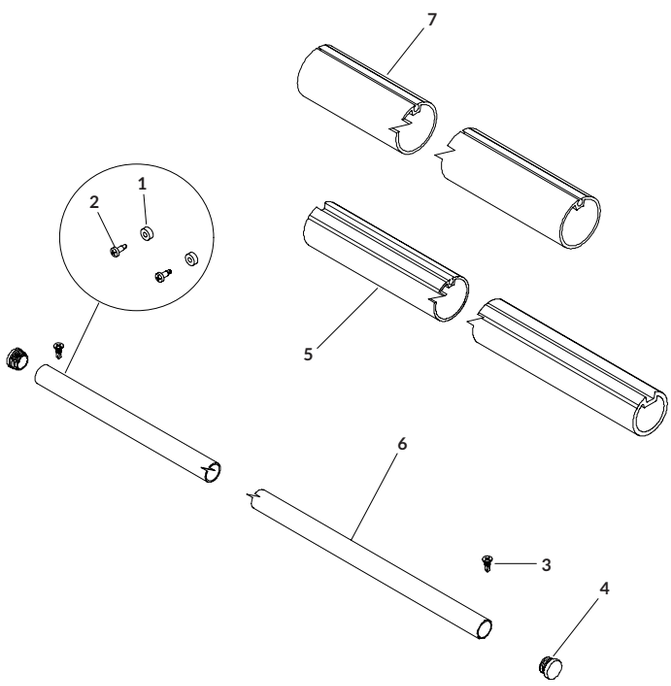

TARP TUBES

	DESCRIPTION	P/N
	HARDWARE	
	Fixed Tube Stop Hdw. [Includes: 2 of 1 & 2]	1118536
	Fixed Tube Hdw. [Includes 2 of 3 & 4]	1115112
	PARTS	
1	Plastic Washer - Black	1118037
2	Self-Drilling Screw - 1/4" x 3/4"	1700398
3	Flat-Headed Self-Drilling Screw - 1/4" x 3/4"	1704768
4	Plastic End Plug	1700523
5	Alum Splice Tube - 3"	1704863
6	Fixed Tube - 1-1/8" x 8'	
	Fixed Tube - 1-1/8" x 11'	
	Fixed Tube - 1-1/8" x 15'	
	Fixed Tube - 1-1/8" x 16'	
	Fixed Tube - 1-1/8" x 20'	
	Fixed Tube - 1-1/8" x 24'	
7	Alum Roll Tube - 3" x 12'	
	Alum Roll Tube - 3" x 16'	
	Alum Roll Tube - 3" x 20'	
	Alum Roll Tube - 3" x 24'	

*Box length is needed in inches; tarp tube is cut to length.

Table of Contents

Replacement Parts

CAB WIRING KITS

	DESCRIPTION	P/N
	ROCKER SWITCH KITS	
	+ CABLE-LOK™ | SHUR-TRAK II™ HD Motor	
	Cab Wiring for Rocker - 6 Ga. x 20' - SMART80 x 40 Amp [Includes: B; 1; 3; 4; 19; 15 of 18]	1128926
	Cab Wiring for Rocker - 6 Ga. x 30' - SMART80 x 40 Amp [Includes: B; 1; 3; 4; 19; 15 of 18]	1128928
6	40-Amp Modified-Reset Circuit Breaker	1704354
19	80-Amp Smart Circuit Breaker	1126784
	+ 4500 SERIES HD	
	Cab Wiring for Rocker - 6 Ga. x 20' - SMART50 x 40 Amp [Includes: B; 1; 3; 4; 19; 15 of 18]	1127844
	Cab Wiring for Rocker - 6 Ga. x 30' - SMART50 x 40 Amp [Includes: B; 1; 3; 4; 19; 15 of 18]	1127845
6	40-Amp Modified-Reset Circuit Breaker	1704354
19	50-Amp Smart Circuit Breaker	1126783
	+ APEX™ | IRONSIDE 2™	
	Cab Wiring for Rocker - 6 Ga. x 20' - SMART80 x 50 Amp [Includes: C; 1; 3; 4; 19; 15 of 18]	1132461
	Cab Wiring for Rocker - 6 Ga. x 30' - SMART80 x 50 Amp [Includes: C; 1; 3; 4; 19; 15 of 18]	1127141
6	50-Amp Auto-Reset Circuit Breaker	1703480
19	80-Amp Smart Circuit Breaker	1126784
	+ ARM-MATIC™ | SHUR-TRAK II™ Durabuilt™ Motor	
	Cab Wiring for Rocker - 6 Ga. x 20' - 50 Amp [Includes: C; 1; 2; 3; 15 of 18]	1121526
	Cab Wiring for Rocker - 6 Ga. x 30' - 50 Amp [Includes: C; 1; 2; 3; 15 of 18]	1122940
6	50-Amp Auto-Reset Circuit Breaker	1703480
	+TURNING POINT™	
	Cab Wiring for Rocker - 6 Ga. x 30' - 25-Amp	CALL
	WIRELESS KITS	
	+ IRONSIDE 2™ | SHUR-TRAK II™	
	Cab Wiring for Wireless - 6 Ga. x 30' - 50 Amp [Includes: E; 1; 4]	1123989
	50-Amp Auto-Reset Circuit Breaker	1703480
	+ 4500 SERIES HD / APEX™	
	Cab Wiring for Wireless - 6 Ga. x 20' - 40 Amp [Includes: D; 1; 4]	1116928
	Cab Wiring for Wireless - 6 Ga. x 30' - 40 Amp [Includes: D; 1; 4]	1119643
	Cab Wiring for Wireless - 6 Ga. x 40' - 40 Amp [Includes: D; 1; 4]	1119644
6	40-Amp Modified-Reset Circuit Breaker	1704354
	HARDWARE	
A	Elec Parts Kit w/Rocker - 25-Amp Auto-Reset [Includes: 5; 6; 7; 12; 13; 14; 15; 24; 26; 2 of 9, 10, 16, 17, 23 & 27; 3 of 22; 4 of 11 & 25; 5 of 8]	1117641
B	Elec Parts Kit w/Rocker - 40 Amp Modified [Includes: 5; 6; 7; 12; 13; 14; 15; 2 of 9, 16 & 17; 4 of 10; 5 of 8; 6 of 11]	1118368
C	Elec Parts Kit w/Rocker - 50 Amp Modified [Includes: 5; 6; 7; 12; 13; 14; 15; 2 of 9, 16 & 17; 4 of 10; 5 of 8; 6 of 11]	1116271
D	Breaker Hdw for Wireless - 6 Ga. x 40 Amp [Includes: 5; 6; 2 of 9 & 10; 15 of 18]	1120855
E	Breaker Hdw for Wireless - 6 Ga. x 50 Amp [Includes: 5; 6; 21; 2 of 9 & 10; 15 of 18]	1127640
F	Wire Retaining Hdw [Includes: 21; 4 of 20 & 21]	1120906
	PARTS	
1	Dual-Cond Wire - 6 Ga. - 20'	1119078
	Dual-Cond Wire - 6 Ga. - 25'	1119033
	Dual-Cond Wire - 6 Ga. - 30'	1118495
	Dual-Cond Wire - 6 Ga. - 40'	1119645
	Dual-Cond Wire - 6 Ga. - 50'	1110312
	Dual-Cond Wire - 6 Ga. - 60'	1127835
	Dual-Cond Wire - 6 Ga. - 75'	1108102
	Dual-Cond Wire - 6 Ga. - 80'	1118388
	Dual-Cond Wire - 6 Ga. - 100'	1108101

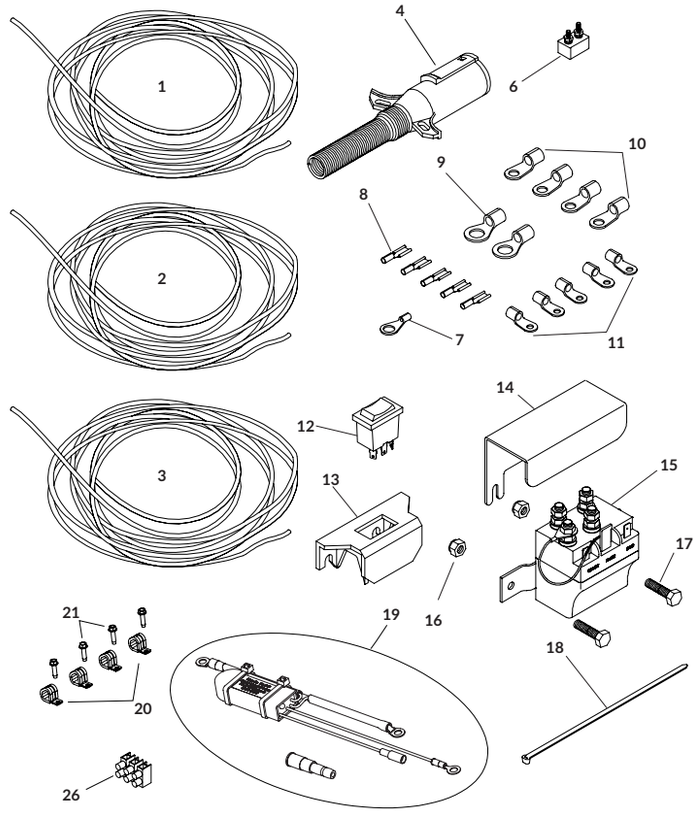

	DESCRIPTION	P/N
	Dual-Cond Wire - 6 Ga. - 125'	1128140
2	Dual-Cond Wire - 8 Ga. - 30'	1117654
	Dual-Cond Wire - 8 Ga. - 50'	1117653
	Dual-Cond Wire - 8 Ga. - 75'	1117652
	Dual-Cond Wire - 8 Ga. - 100'	1117651
3	Electrical Wire - 3 Strand 14 Ga. - 15'	1116482
4	HD Dual-Cond Plug - Vert Pin	1115385
	HD Dual-Cond Plug - Horiz Pin	1704715
5	Circuit Breaker Boot - Red	*1704411
6	40-Amp Modified-Reset Circuit Breaker	1704354
	50-Amp Auto-Reset Circuit Breaker	1703480
	25-Amp Auto-Reset Circuit Breaker	1704126
7	Ring Terminal - 14 Ga. x 1/4" Stud - Solenoid	1704153
8	Quck Disconnect - Female x 14 Ga. x 1/4" - Switch/Solenoid	1703659
9	Ring Terminal - 6 Ga. x 3/8" Stud - Battery	1703244
	Ring Terminal - 8 Ga. x 3/8" Stud - Battery	1704174
10	Ring Terminal - 6 Ga. x #10 Stud - Motor/ Breaker	1703245
	Ring Terminal - 8 Ga. x #10 Stud	1704175
11	Ring Terminal - 6 Ga. x 1/4" Stud - Motor/ Solenoid	1702707
	Ring Terminal - 8 Ga. x 1/4" Stud	1704177
12	Rocker Switch	1116020
13	Rocker Switch Mtg Bracket	1703661
14	Solenoid Cover	1703896
15	Motor-Rev Solenoid 12V - 2 Pt Mnt - Black Wire	1703845
16	Nylon Lock Hex Nut - #10-24	1808844
17	Hex Flange Cap Screw - #10-24 x 1"	1704905
18	Cable Tie - 8"	1703231
19	50-Amp Smart Circuit Breaker	1126783
	80-Amp Smart Circuit Breaker	1126784
20	Wire Clip - 3/4" ID	1702108
21	Self-Tapping Screw - 1/4" x 1"	1704338
22	Dielectric Connector Protector	*1704378
23	Nylon Lock Nut - #6-32	*1704184
24	Terminal Block Mtg Bracket	*1117647
25	Self-Drilling Screw - #12 x 1"	*1701471
26	3-Circuit Terminal Block	1704190
27	Machine Screw - 6-32 x 7/8"	*1704191

*These items are NOT shown in the drawing.

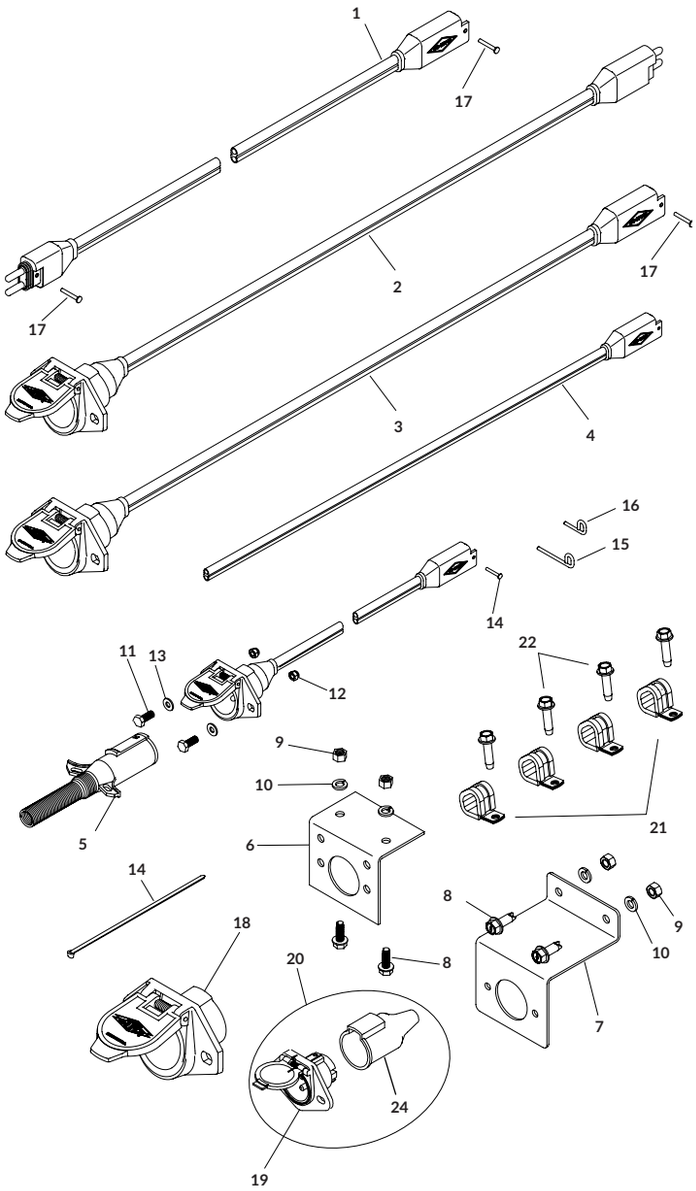

TRAILER WIRING KITS

	DESCRIPTION	P/N
	KITS & HARDWARE	
	Trailer Wiring Kit - SMARTwire™ 4 Ga. - 33' Trl. [Includes: 1; 2; 22; 12 of 21 & 22; 40 of 14]	*1122533
	Trailer Wiring Kit - SMARTwire™ 4 Ga. - 42' Trl. [Includes: 1; 2; 22; 12 of 21 & 22; 40 of 14]	*1122534
	Trailer Wiring Kit - SMARTwire™ 4 Ga. - 50' Trl. [Includes: 1; 2; 22; 12 of 21 & 22; 40 of 14]	*1122535
	SMARTwire™ Dual-Cond Kit - 6 Ga - L Brkt. [Includes: A; 3; 5; 6]	1132502
	SMARTwire™ Dual-Cond Kit - 6 Ga - Z Brkt. [Includes: A; 3; 5; 7]	1132504
	Dual-Connector Kit - Vert. Pin - L Brkt. [Includes: A; 5; 6; 19; 20]	1109016
	Dual-Connector Kit - Vert. Pin - Z Brkt. [Includes: A; 5; 7; 19; 20]	1132564
	Dual-Connector Kit - Horiz. Pin - L Brkt. [Includes: A; 5; 6; 19; 20]	1123050
A	Dual-Cond. Hdw. [Includes: 2 of 8, 9, 10, 11, 12 & 13]	1109017
B	Wire Retaining Hdw. [Includes: 23; 4 of 21 & 22]	1120906
	SMARTwire™ MALE x FEMALE	
1	SMARTwire™ Socket x Plug - 6 Ga. x 8'	1704874
	SMARTwire™ Socket x Plug - 6 Ga. x 16'	1704827
	SMARTwire™ Socket x Plug - 6 Ga. x 25'	1704704
	SMARTwire™ Socket x Plug - 6 Ga. x 30'	1125597
	SMARTwire™ Socket x Plug - 4 Ga. x 25'	1704888
	SMARTwire™ Socket x Plug - 4 Ga. x 30'	1705108
	SMARTwire™ SOCKET x MALE	
2	SMARTwire™ Dual-Cond Socket x Male - 4 Ga. x 22'	1122541
	SMARTwire™ Dual-Cond Socket x Male - 4 Ga. x 32'	1122542
	SMARTwire™ Dual-Cond Socket x Male - 4 Ga. x 40'	1122543
	SMARTwire™ SOCKET x FEMALE	
3	SMARTwire™ Dual-Cond Socket x Female - 6 Ga. x 3'6"	1120670
	SMARTwire™ FEMALE x BLUNT	
4	SMARTwire™ Socket x Blunt - 6 Ga. x 18'	1121631
	SMARTwire™ Socket x Blunt - 6 Ga. x 30'	1128856
	SMARTwire™ Socket x Blunt - 6 Ga. x 35'	1130541
	SMARTwire™ Socket x Blunt - 6 Ga. x 40'	1704994
	PARTS	
5	HD Dual-Cond Plug - Vert Pin	1115385
	HD Dual-Cond Plug - Horiz Pin	1704715
6	Conductor Plug Mtg. (L) Bracket	1109015
7	Conductor Plug Mtg. (Z) Bracket	1127798
8	Self-Tapping Screw - 3/8" x 1"	1700400
9	Hex Nut - 3/8"	1700407
10	Lock Washer - 3/8"	1700434
11	Hex Head Cap Screw - 5/16" x 3/4"	1701045
12	Top Lock Flange Nut - 5/16"	1704946
13	Flat Washer - 1/4"	1700427
14	Cable Tie - 8"	1703231
15	Harness Lock Pin - Long	1704696
16	Harness Lock Pin - Short	1704711
17	Harness Lock Pin - 1/4" x 7/8"	1704751
18	Dual-Cond Housing - Female	1704978
19	HD Dual-Cond Socket - Vert. Pin	1115386
	HD Dual-Cond Socket - Horiz. Pin	1704714
20	HD Dual-Cond Socket w/Boot - Vertical Pin	1119557
21	Wire Clip - 3/4" ID	1702108
22	Self-Tapping Screw - 1/4" x 1"	1704338
23	Dielectric Connector Protector	**1704378
24	Sealing Boot - Socket Half Dual-Cond	1704573

*Lead trailer wiring kit ties into 4500 Series HD kit on lead trailer, which routes power to rear of lead trailer. Junction block NOT included.

**These items are NOT shown in the drawing.

Table of Contents

Replacement Parts

RECEIVERS

	DESCRIPTION	P/N
	RECEIVER CONVERSION KITS	
	ShurLink™ Rec. Conv. Cover - Tarp - Express [Includes: 11; 12; 13]	*1132226
	ShurLink™ Rec. Conv. Cover - Tarp - Non-Express [Includes: 11; 12; 13]	1132227
	EXPRESS MODE	
	+ 4500 SERIES HD	
	ShurLink™ Rec. - Express - Rear Output [Includes: A; B; 1; 3; 4; 5; 7; 9; 15 of 10]	1131566
	ShurLink™ Rec. - Express - Bottom Output [Includes: A; B; 1; 3; 4; 5; 7; 9; 15 of 10]	1131572
1	ShurLink™ Rec. Cover - Express	1131673
	+ APEX™ | IRONSIDE 2™	
	ShurLink™ Rec. - Apex™/IronSide II™ - Express - Rear Output [Includes: A; B; 1; 3; 4; 5; 7; 9; 15 of 10]	1131622
	ShurLink™ Rec. - Apex™/IronSide II™ - Express - Bottom Output [Includes: A; B; 1; 3; 4; 5; 7; 9; 15 of 10]	1131614
1	ShurLink™ Rec Cover - Express	1132506
	NO EXPRESS MODE	
	+ SHUR-TRAK II™	
	ShurLink™ Rec - Non-Express - Rear Output [Includes: C; D; 2; 8; 11; Insulating Plate, Wiring & Hdw.]	1131582
2	ShurLink™ Rec. Cover w/Gasket - Non-Express	1132195
	+ 4500 SERIES HD	
	ShurLink™ Rec. - Non-Express - Rear Output [Includes: A; B; 1; 3; 4; 5; 7; 9; 15 of 10]	1131581
	ShurLink™ Rec - Non-Express - Bottom Output [Includes: A; B; 1; 3; 4; 5; 7; 9; 15 of 10]	1131586
1	ShurLink™ Rec. Cover - Non-Express	1131674
	HARDWARE	
A	ShurLink™ Rec. Mtg. Hdw.	1131571
B	ShurLink™ Rec Hdw. w/Gland	1132510
C	ShurLink™ Rec. Mtg. Hdw. - Non Pre-Wire	1131583
D	Breaker Hdw. for ShurLink Rec. - 6 Ga. x 40 Amp - Non Pre-Wire	1116492
E	Wire Retaining Hdw. [Includes: 16; 4 of 14 & 15]	1120906
	SMARTWIRE™ FEMALE X .25" RING	
3	SMARTwire™ Socket x 1/4" Terminal - 6 Ga. x 2'4"	1129607
	SMARTwire™ Socket x 1/4" Terminal - 6 Ga. x 6'3"	1120817
	SMARTwire™ Socket x 1/4" Terminal - 6 Ga. x 12'	1127241
	SMARTWIRE™ MALE x .25" RING	
4	SMARTwire™ Plug x 1/4" Terminal - 6 Ga. x 2'4"	1704705
	SMARTwire™ Plug x 1/4" Terminal - 6 Ga. x 7'	1121308
	SMARTwire™ Plug x 1/4" Terminal - 6 Ga. x 12'	1127089
	ENCODER WIRE ASSEMBLY	
5	Encoder Wire Assy - 18 Ga. - 2'6"	1132142
	Encoder Wire Assy - 18 Ga. - 6'4"	1706853
6	Encoder Wire Ext. - 18 Ga. - Male x Female - 8'	1128818
	Encoder Wire Ext. - 18 Ga. - Male x Female - 16'	1129903
	Encoder Wire Ext. - 18 Ga. - Male x Female - 24'6"	1123068
	Encoder Wire Ext. - 18 Ga. - Male x Female - 30'	1131256
	PARTS	
7	Motor-Rev. Solenoid 12V - 2 Pt. Mnt. - Black Wire	1703845
8	Motor-Rev. Solenoid 12V - 3 Pt. Mnt. - Black Wire	1705408
9	ShurLink™ Rec. Base	1706768
10	Cable Tie - 8"	1703231
11	ShurLink™ Rec. Cover w/Gasket - Express	1132194
	ShurLink™ Rec Cover w/Gasket - Non-Express	1132195
12	Solenoid Cover Gasket - 1/8"	1704309
13	Wire - 18 Ga. x .25" Ring - Black	1705428
14	Wire Clip - 3/4" ID	1702108
15	Self-Tapping Screw - 1/4" x 1"	1704338
16	Dielectric Connector Protector	1704378
17	Harness Lock Pin - 1/4" x 7/8"	1704751

*ShurLink™ Receiver Conversion Cover will not work on Apex™ or Shur-Trak II™, please CALL for details.

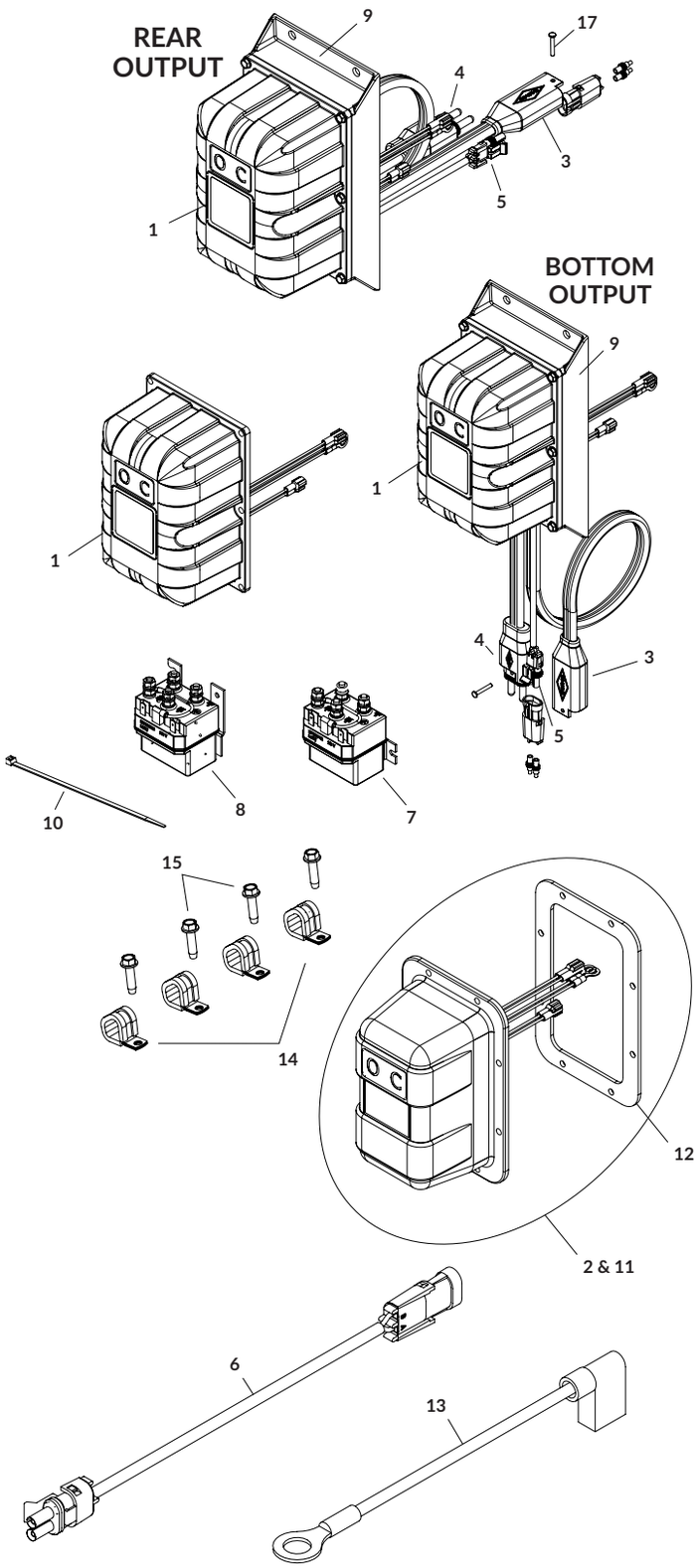

Table of Contents

Replacement Parts

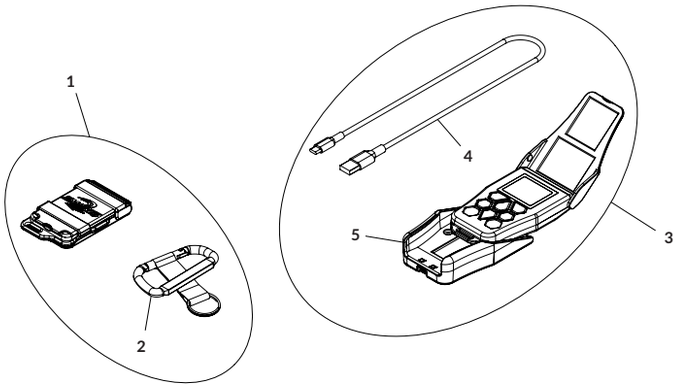

REMOTES

	DESCRIPTION	P/N
1	ShurLink EZR™ Remote	1131576
2	Carabiner Key Strap	1704569
3	ShurLink PRO™ Remote -Cradle/Charging Cbl.	1131575
4	ShurLink™ Charging Cable USB - A-Male to C-Male - 3'	1706836
5	ShurLink PRO™ Remote Cradle	1131764

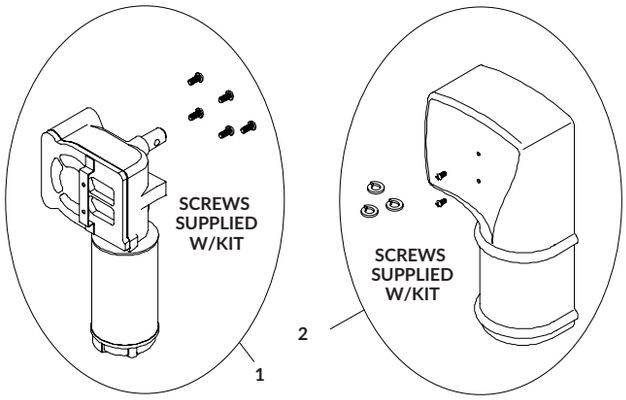

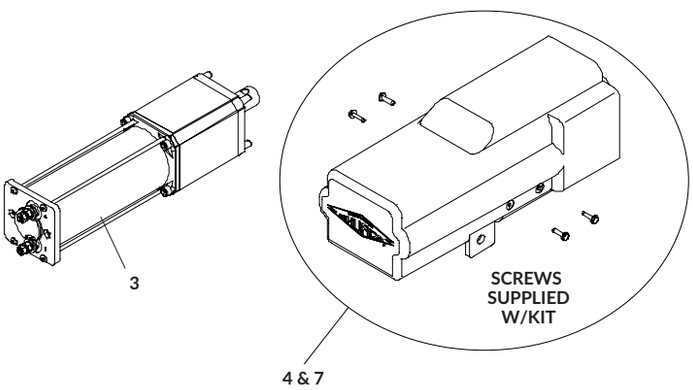

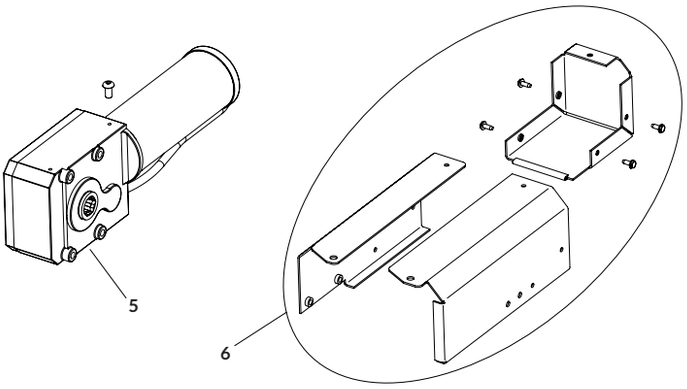

MOTORS

	DESCRIPTION	WARRANTY	P/N
	ARM-MATIC™ | FLASH™ | BULLET™		
	+ DURABUILT™		
1	Direct-Drive Motor - 900 Watt - 12V	3-Year	1704878
2	Motor Cover - Chrome - 1 Pc.		1811884
	Motor Cover - Black - 1 Pc.		1804950
	FLASH™ | BULLET™ | HAMMER™ II | 5000X		
	+ DURABUILT™		
1	Direct-Drive Motor - 600 Watt - 12V		1802061
2	Motor Cover - Chrome - 1 Pc.		1801585
	SHUR-TRAK II™		
	+ DURABUILT™		
1	Durabuilt™ Motor w/Cover - 2-3/8" Shaft - 3/16" Keyway w/Cover	3-Year	1125700
2	Motor Cover - Chrome - 1 Pc.		1811884
	Motor Cover - Black - 1 Pc.		1804950
	CABLE-LOK™		
	+ DURABUILT™		
1	Durabuilt™ Motor w/Cover - 2-1/8" Shaft	3-Year	1121307
2	Motor Cover - Chrome - 1 Pc.		1811884
	Motor Cover - Black - 1 Pc.		1804950
	SHUR-TRAK II™		
	+ HD ELECTRIC MOTOR		
	HD Electric Motor		1122442
	Motor Cover Kit - Shur-Trak II™		1132563
	4500 SERIES HD		
	+ 4500 MOTOR		
3	4500 HD Motor	3-Year	1120967
4	Motor Cover Kit - Black		1121659
	Motor Cover Kit - Chrome		1128340
	APEX™ | IRONSIDE 2™		
	+IRONSIDE MOTOR		
5	Ironside II™/Apex™ Motor	3-Year	1127091
6	Motor Cover Kit - Apex™		1811880
7	Motor Cover Kit - IronSide II™		1126811

Table of Contents

Replacement Parts

CABLE-LOK™ ELECTRIC - FRONT ARM

	DESCRIPTION	P/N
	HARDWARE	
	Swing Arm Hdw. - Durabuilt™ [Includes: 5, 7, 8, 10, 12, 14,16, 17; 2 of 11, 13 & 15; 3 of 2 & 4]	1130435
	PARTS	
1	Durabuilt™ Motor w/Cover - 2-1/8" Shaft	1121307
2	Lock Washer - 5/16"	1700433
3	Upper Pivot Arm - Short - Durabuilt™	1122952
4	Hex Head Cap Screw - 5/16" x 3/4"	1701045
5	End Plug - 1"	1701595
6	Lower Pivot Arm - 60"	1129986
7	Hex Head Cap Screw - 5/16" x 1-3/4"	1701468
	Hex Head Cap Screw - 5/16" x 2-1/2"	1703237
8	Nylon Lock Nut - 5/16"	1704297
9	Cartridge Spacer - 19-1/8"	1125469
10	Hex Head Cap Screw - 1/2" x 3-1/2"	1706597
11	Flat Washer - 1/2"	1702114
12	Retainer Bushing - 11/16"	1100306
13	Hex Nut - 1/2"	1700409
14	Stainless Spacer Tube - .84" OD x .55" ID x 1-1/4"	1127959
15	Fender Washer - 1/2"	1706097
16	Nylon Lock Hex Nut - 1/2"	1702115
17	Rubber Insulating Boot	*1704330

*These items are NOT shown in the drawing.

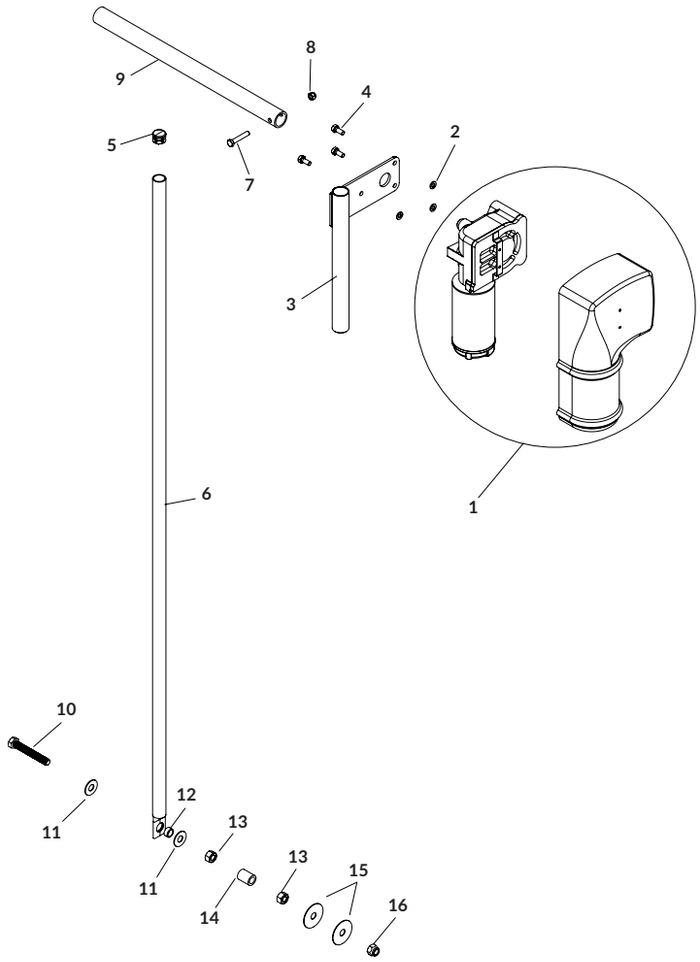

Table of Contents

Replacement Parts

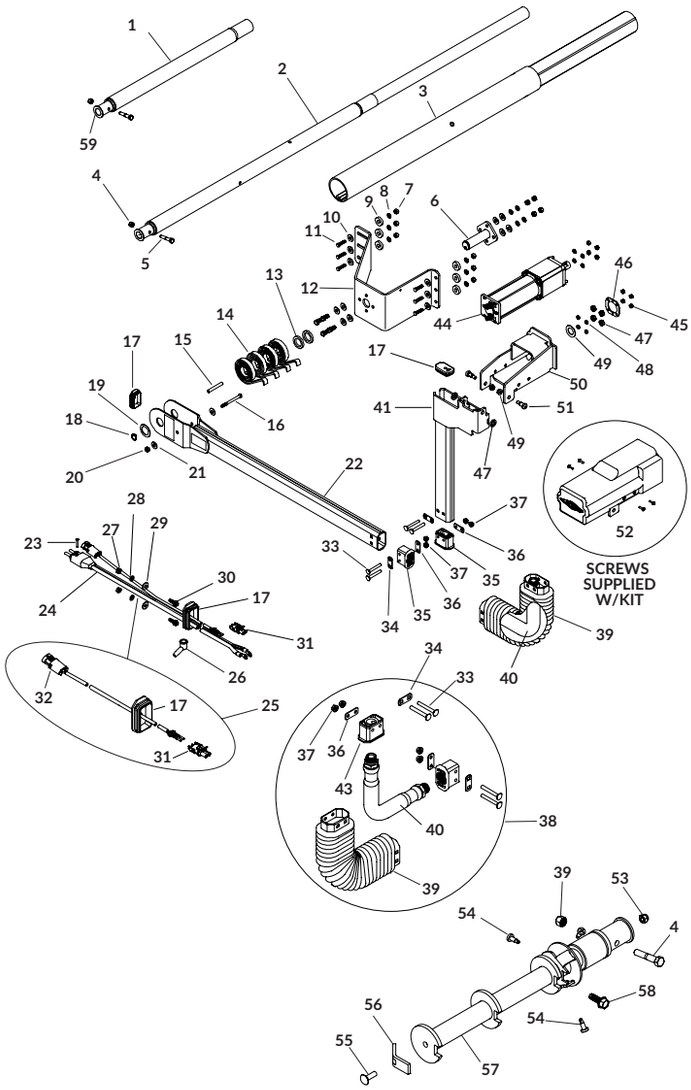

FRONT ARM ASSEMBLIES

	DESCRIPTION	P/N
	KITS & HARDWARE	
	Front Flex Arm Kit w/Motor - 9-1/4" [Includes: B; 18; 19; 41; 44; 2 of 13, 42, 43 & 51; 4 of 14; w/wiring plate]	1124094
	Front Flex Arm Kit w/Motor - 7-1/4" [Includes: B; 18; 19; 41; 44; 2 of 13, 42, 43 & 51; 4 of 14; w/wiring plate]	1124095
	Pivot Mount Bracket Kit - 6" x 7-1/4" [Includes: F; 6; 12]	1132515
	Pivot Mount Bracket Kit - 6" x 9-1/4" [Includes: F; 6; 12]	1132516
	Electric Drive Shaft Kit - 3" [Includes: H; 57]	1122880
A	Flex Arm Joint Kit - 4500 HD [Includes: 39; 40; 2 of 34, 35 & 36; 4 of 33 & 37]	1125154
B	Front Flex Arm Kit w/o Motor - w/o Wiring Plate [Includes: A; J; 15; 16; 17; 20; 22; 32; 34; 36; 41; 2 of 21 & 26]	1125610
C	Flex Arm Joint Hdw [Includes: 34; 36; 2 of 33 & 37]	1121702
D	Spring Support Hdw [Includes: 15; 16; 18; 19; 20; 2 of 13 & 21]	1116926
E	Motor Mount Hdw [Includes: 4; 5; 46; 49; 4 of 45, 47 & 48]	1120977
F	Pivot Bracket Hdw - 6" Vertical [Includes: 6 of 9; 10 of 11, 7 & 8; 14 of 10]	1121579
G	Pivot Bracket Hdw - End Dump [Includes: 4 of 11 & 58; 8 of 7 & 8; 12 of 10]	1117007
H	Drive Shaft Hdw - 3" [Includes: 4; 5; 53; 55; 56; 58; 3 of 54]	1131569
	PARTS	
J	SMARTwire™ Assy - 6 Ga. - Plug x 1/4" Terminal x 10'9"	1125612
1	Roll Tube Extension w/Drive Shaft - 34.43"	1120697
	Roll Tube Extension w/Drive Shaft - 45.37"	1120698
2	Roll Tube Extension w/Drive Shaft - End Dump	1120699
3	Roll Tube Extension - 3" x 45"	1124901
4	Nylon Lock Nut - 3/8"	1701580
5	Hex Head Cap Screw - 3/8" x 2"	1704264
6	Pivot Pin - 4 Spring	1116920
7	Hex Nut - 3/8"	1700407
8	Lock Washer - 3/8"	1700434
9	Spacer Washer - 1/4" x 1" OD x .406"	1120291
10	Flat Washer - 3/8"	1700429
11	Hex Head Cap Screw - 3/8" x 1-1/4"	1702891
12	Pivot Mnt Bracket - 6" x 7-1/4"	1121582
	Pivot Mnt Bracket - 6" x 9-1/4"	1121578
	Pivot Mnt Bracket - 6" x 10-1/4"	1124678
13	Spacer Washer - 1/4" x 1.81 OD x 1.28"	1118318
14	Spiral Torsion Spring	1111027
15	Spacer Tube - .35" x 2-5/8"	1117033
16	Hex Head Cap Screw - 5/16" x 3-1/2"	1201022
17	Cap Plug w/Hole	1704893
18	Flat Washer - 1-1/4" x 1-7/8"	1702890
19	Retaining Ring - 1-1/4"	1702888
20	Nylon Lock Hex Nut - 5/16"	1700419
21	Flat Washer - 5/16"	1700428
22	Lower Flex Arm w/Warning Decals - Front	1121617
23	Harness Lock Pin - 1/4" x 7/8"	1704751
24	SMARTwire™ - 6 Ga. - Plug x 1/4" Terminal x 10'9"	1704987
25	Encoder Wire - 18 Ga. - 10'6"	1121998
26	Rubber Insulating Boot	1704330
27	Hex Nut - 1/4"	1700408
28	Lock Washer - 1/4"	1700436
29	Flat Washer - 1/4"	1700427
30	Self-Tapping Screw - 1/4" x 3/4"	1700403
31	WeatherPack™ - Cavity Plug	1704799
32	WeatherPack™ - Tower	1704798
33	Carriage Bolt - 5/16" x 2-1/2" - GR5	1701455
34	Bellow Plate - Square Holes	1121414
35	End Fitting	1704891
36	Bellow Plate - Round Holes	1121413
37	Flanged Nylon Lock Nut - 5/16"	1704931

	DESCRIPTION	P/N
38	Flex Arm Joint Kit - 4500 HD	1125154
39	Arm Bellow	1704775
	PARTS	
40	Flex Arm Joint	1706825
41	Upper Flex Arm - Front	1121289
42	Upper Arm Spacer	1120677
43	Top Lock Flange Nut - 3/8"	1701283
44	4500 HD Motor	1120967
45	Nylon Lock Hex Nut - 1/4"	1701543
46	Motor Mount Bearing Retainer	1128243
47	Radial Ball Bearing - 1/4" x 3/4"	1704736
48	Motor Mount Bearing Spacer	1120680
49	Motor Spacer	1120679
50	4500 HD Motor Mount - 7-1/4"	1120776
	4500 HD Motor Mount - 9-1/4"	1120662
51	Shoulder Bolt - 3/8" x 1/2"	1704778
52	Motor Cover Kit - Black	1121659
	Motor Cover Kit - Chrome	1128340
53	Nylon Lock Nut - 5/16"	1704297
54	Self-Drilling Screw - 1/4" x 1"	1705198
55	Carriage Bolt - 5/16" x 1" - GR5	1704237
56	Cartridge Clamp	1118194
57	4500 HD Drive Shaft - 3"	1122264
58	Self-Tapping Screw - 3/8" x 1"	1700400
59	Roll Tube Drive Shaft - 4500HD	1120645

REAR ARM ASSEMBLIES

	DESCRIPTION	P/N
	KITS & HARDWARE	
	Rear Flex Arm Kit [Includes: B; C; D; 13; 17; 23; 24; 2 of A, 4 of 9]	1123929
	Rear Flex Arm Kit - 3" [Includes: B; C; E; 13; 17; 23; 24; 2 of A, 4 of 9]	*1129457
	Pivot Mount Bracket Kit - 6" x 7-1/4" [Includes: F; 4; 7]	1132515
	Pivot Mount Bracket Kit - 6" x 9-1/4" [Includes: F; 4; 7]	1132516
	Flex Arm Joint Kit - 4500 HD [Includes: 23; 24; 2 of 19, 20, 21, 4 of 18 & 22]	1125154
A	Flex Arm Joint Hdw [Includes: 19; 21; 2 of 18 & 22]	1121702
B	Spring Support Hdw [Includes: 10; 11; 14; 15; 19; 2 of 8 & 12]	1116926
C	Exposed Spline/Bearing Hdw [Includes: 27; 28; 2 of 16, 20 & 29; 4 of 22 & 26]	1121723
D	Rear Arm Collar Hdw [Includes 28; 2 of 29]	1127149
E	Rear Arm Collar Hdw - 3" [Includes 28; 2 of 29]	*1127150
F	Pivot Bracket Hdw - 6" Vertical [Includes: 6 of 5; 10 of 1, 2 & 6; 14 of 3]	1121579
	PARTS	
1	Hex Nut - 3/8"	1700407
2	Lock Washer - 3/8"	1700434
3	Flat Washer - 3/8"	1700429
4	Pivot Pin - 4 Spring	1116920
5	Spacer Washer - 1/4" x 1" OD x .406"	1120291
6	Hex Head Cap Screw - 3/8" x 1-1/4"	1702891
7	Pivot Mnt Bracket - 6" x 7-1/4"	1121582
	Pivot Mnt Bracket - 6" x 9-1/4"	1121578
	Pivot Mnt Bracket - 6" x 10-1/4"	1124678
8	Spacer Washer - 1/4" x 1.81 OD x 1.28"	1118318
9	Spiral Torsion Spring	1111027
10	Spacer Tube - .35" x 2-5/8"	1117033
11	Hex Head Cap Screw - 5/16" x 3-1/2"	1201022
12	Flat Washer - 5/16"	1700428
13	Nylon Lock Hex Nut - 5/16"	1700419
14	Flat Washer - 1-1/4" x 1-7/8"	1702890
15	Retaining Ring - 1-1/4"	1702888
16	Cap Plug	1704892
17	Lower Flex Arm w/Warning Decals - Rear	1121294
18	Carriage Bolt - 5/16" x 2-1/2" - GR5	1701455
19	Bellow Plate - Square Holes	1121414
20	End Fitting	1704891
21	Bellow Plate - Round Holes	1121413
22	Flanged Nylon Lock Nut - 5/16"	1704931
23	Flex Arm Joint	1706825
24	Arm Bellow	1704775
25	Upper Flex Arm - Bearing	1121293
	Upper Flex Arm - Bearing - 3"	*1124796
26	Shoulder Bolt - 3/8" x 2" Thread x 5/16" x 1/2"	1704943
27	Bearing Mount Box	1121430
	Bearing Mount Box - 3"	*1123248
28	Rear Arm Bearing Ring	1704942
	Rear Arm Bearing Ring - 3"	*1705160
29	Blind Rivet - 3/16"	**1706103

*Used with 3" roll tubes.

**Used with both 2" and 3" roll tubes.

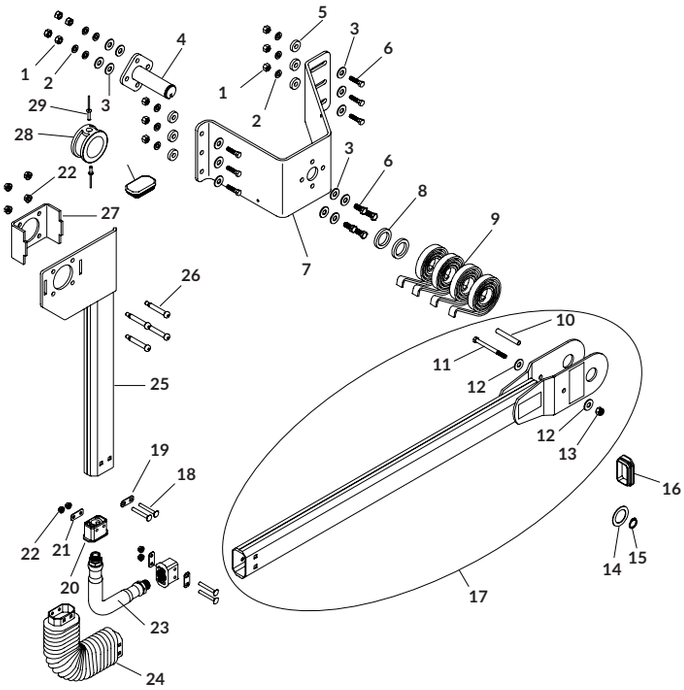

Table of Contents

Replacement Parts

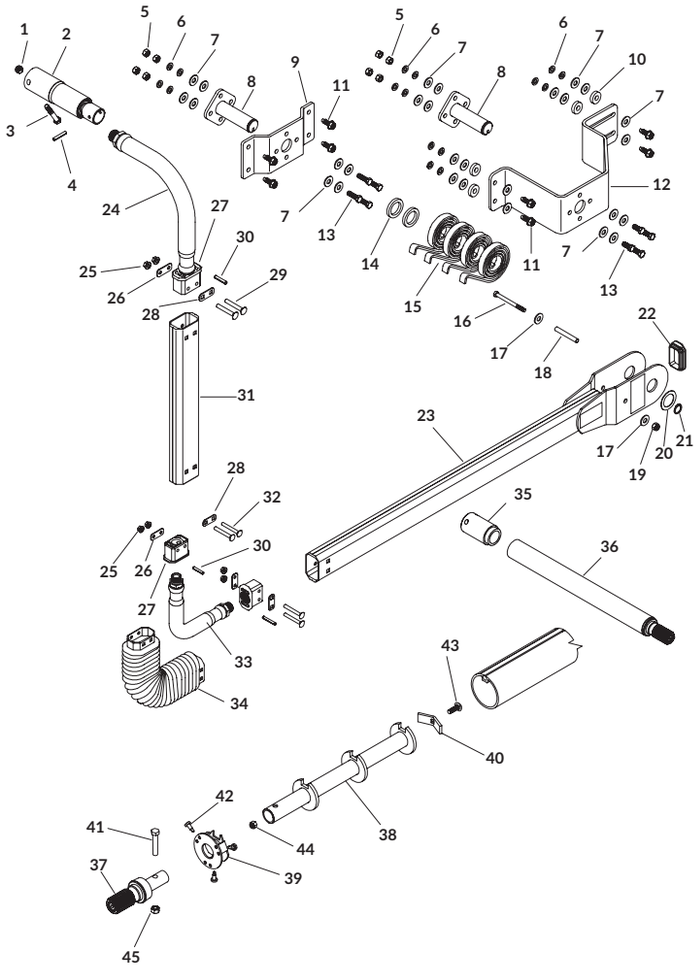

REAR SIDE HINGE ASSEMBLIES

	DESCRIPTION	P/N
	KITS & HARDWARE	
	Rear Flex Arm Kit - Side Hinge - No Manual Override [Includes: B; C; 2; 22; 23; 24; 31; 33; 34; 2 of A, 27 & 30; 4 of 15]	1130902
	Pivot Mount Bracket Kit - 4" x 7-1/4" [Includes: D; 8; 12]	1132517
	Pivot Mount Bracket Kit - 4" x 9-1/4" [Includes: D; 8; 12]	1132518
	Flex Arm Joint Kit w/Alum. Fittings - 4500 HD [Includes: 33; 34; 2 of 26, 27, 28, 30; 4 of 25 & 32]	1128831
	Manual Override Extension Kit [Includes: 35; 36]	1117022
	Manual Crank Kit - 3" [Includes: F; 29; 37; 38]	1122879
A	Flex Arm Joint Hdw [Includes: 26; 28; 2 of 25 & 32]	1121702
B	Spring Support Hdw [Includes: 16; 18; 19; 20; 21; 2 of 14 & 17]	1116926
C	Rear Flex Arm Hdw - Side Hinge [Includes: 1; 3; 4; 26 & 28; 2 of 25 & 29]	1121737
D	Pivot Bracket Hdw - 4" Vertical [Includes: 4 of 10; 8 of 5, 6 & 13; 12 of 7]	1116946
E	Pivot Bracket Hdw - Side Hinge [Includes: 4 of 11; 8 of 5, 6 & 13]	1117911
F	Drive Shaft Hdw - 3" [Includes: 11; 40; 41; 43; 44; 45; 3 of 42]	1131569
	PARTS	
1	Centerlock Hex Nut - 3/8"	1700418
2	Roll Tube Bearing Pack	1117777
3	Hex Head Cap Screw - 3/8" x 2-1/2"	1702573
4	Spring Pin - 1/4" x 1-1/2"	1700445
5	Hex Nut - 3/8"	1700407
6	Lock Washer - 3/8"	1700434
7	Flat Washer - 3/8"	1700429
8	Pivot Pin - 4 Spring	1116920
9	Pivot Mnt Bracket - 4" x 1-1/4"	1117767
10	Spacer Washer - 1/4" x 1" OD x .406"	1120291
11	Self-Tapping Screw - 3/8" x 1"	1700400
12	Pivot Mnt Bracket - 4" x 7-1/4"	1116919
	Pivot Mnt Bracket - 4" x 9-1/4" Standoff	1117031
	Pivot Mnt Bracket - 4" x 10-1/4" Standoff	1129155
13	Hex Head Cap Screw - 3/8" x 1-1/4"	1702891
	Hex Head Cap Screw - 3/8" x 3"	1700371
14	Spacer Washer - 1/4" x 1.81 OD x 1.28"	1118318
15	Spiral Torsion Spring	1111027
16	Hex Head Cap Screw - 5/16" x 3-1/2"	1201022
17	Flat Washer - 5/16"	1700428
18	Spacer Tube - .35" x 2-5/8"	1117033
19	Nylon Lock Hex Nut - 5/16"	1700419
20	Flat Washer - 1-1/4" x 1-7/8"	1702890
21	Retaining Ring - 1-1/4"	1702888
22	Cap Plug	1704892
23	Lower Flex Arm w/Warning Decals - Rear	1121294
24	Upper Flex Arm Joint - Side Hinge	1121680
25	Flanged Nylon Lock Nut - 5/16"	1704931
26	Bellow Plate - Round Holes	1121413
27	End Fitting	1704891
	End Fitting - Aluminum	1706260
28	Bellow Plate - Square Holes	1121414
29	Carriage Bolt - 5/16" x 2-1/4" - GR5	1704971
30	Spring Pin - 1/4" x 1-3/8"	1704966
31	Upper Flex Arm - Side Hinge	1121738
32	Carriage Bolt - 5/16" x 2-1/2" - GR5	1701455
33	Flex Arm Joint	1706825
34	Arm Bellow	1704775
35	Manual Override Spline Connector	1117020
36	Manual Override Spline Assy	1117023
37	Manual Crank Spline - 3"	1121111
38	Rear Cartridge	1121039
39	Roll Tube End Cap - Rear	1121040
40	Cartridge Clamp	1118194
41	Hex Head Cap Screw - 3/8" x 2"	1704264
42	Self-Drilling Screw - 1/4" x 1"	1705198
43	Carriage Bolt - 5/16" x 1" - GR5	1704237
44	Nylon Lock Nut - 5/16"	1704297
45	Nylon Lock Nut - 3/8"	1701580

Table of Contents

Replacement Parts

REAR TOP HINGE ASSEMBLIES

	DESCRIPTION	P/N
	KITS & HARDWARE	
	Rear Flex Arm Kit - Top Hinge No Manual Override [Includes: B; C; 17; 20; 25; 28; 31; 33; 34; 2 of A; 4 of 9]	1126477
	Pivot Mount Bracket Kit - 4" x 7-1/4" [Includes: D; 4; 5]	1132517
	Pivot Mount Bracket Kit - 4" x 9-1/4" [Includes: D; 4; 5]	1132518
	Flex Arm Joint Kit w/Alum. Fittings - 4500 HD [Includes: 34; 35; 2 of 27, 28, 29 & 31]	1128831
	Manual Override Extension Kit [Includes: 35; 36]	1117022
	Manual Crank Kit - 3" [Includes: F; 37; 38; 39]	1122879
A	Flex Arm Joint Hdw [Includes: 27; 29; 2 of 26 & 30]	1121702
B	Spring Support Hdw [Includes: 10; 12; 13; 14; 15; 2 of 8 & 11]	1116926
C	Extension Hdw - Gate Flex™ [Includes: 13; 18; 19; 22; 28; 32; 2 of 16, 21, 23 & 24]	1121736
D	Pivot Bracket Hdw - 4" Vertical [Includes: 8 of 1, 2 & 7; 12 of 3]	1116946
E	Pivot Bracket Hdw - End Dump [Includes: 4 of 6 & 7; 8 of 1 & 2; 12 of 3]	1117007
F	Drive Shaft Hdw - 3" [Includes: 6; 21; 24; 40; 43; 44]	1131569
	PARTS	
1	Hex Nut - 3/8"	1700407
2	Lock Washer - 3/8"	1700434
3	Flat Washer - 3/8"	1700429
4	Pivot Pin - 4 Spring	1116920
5	Pivot Mnt Bracket - 4" x 7-1/4"	1116919
	Pivot Mnt Bracket - 4" x 9-1/4"	1117031
	Pivot Mnt Bracket - 4" x 10-1/4"	1129155
	Pivot Bracket - Sloped - Gate Flex™	1116994
6	Self-Tapping Screw - 3/8" x 1"	1700400
7	Hex Head Cap Screw - 3/8" x 1-1/4"	1702891
8	Spacer Washer - 1/4" x 1.81 OD x 1.28"	1118318
9	Spiral Torsion Spring	1111027
10	Hex Head Cap Screw - 5/16" x 3-1/2"	1201022
11	Flat Washer - 5/16"	1700428
12	Spacer Tube - .35" x 2-5/8"	1117033
13	Nylon Lock Hex Nut - 5/16"	1700419
14	Retaining Ring - 1-1/4"	1702888
15	Flat Washer - 1-1/4" x 1-7/8"	1702890
16	Cap Plug	1704892
17	Lower Flex Arm w/Warning Decals - Rear	1121294
18	Centerlock Hex Nut - 3/8"	1700418
19	Hex Head Cap Screw - 3/8" x 2-1/2"	1702573
20	Gate Flex™	1116990
	Gate Flex™ - Long	1118534
21	Nylon Lock Nut - 3/8"	1701580
22	Hex Head Cap Screw - 5/16" x 1 1/2"	1703487
23	Flange Bearing - 20mm - 2 Bolt	1704703
24	Hex Head Cap Screw - 3/8" x 2"	1704264
25	Upper Flex Arm - Gate Flex™	1121649
26	Flanged Nylon Lock Nut - 5/16"	1704931
27	Bellow Plate - Round Holes	1121413
28	End Fitting	1704891
	End Fitting - Aluminum	1706260
29	Bellow Plate - Square Holes	1121414
30	Carriage Bolt - 5/16" x 2-1/2" - GR5	1701455
31	Spring Pin - 1/4" x 1-3/8"	1704966
32	Spring Pin - 1/4" x 1-3/4"	1701360
33	Flex Arm Joint	1706825
34	Arm Bellow	1704775
35	Manual Override Spline Connector	1117020
36	Manual Override Spline Assy	1117023
37	Manual Crank Spline - 3"	1121111
38	Rear Cartridge	1121039
39	Roll Tube End Cap - Rear	1121040
40	Cartridge Clamp	1118194
41	Hex Head Cap Screw - 3/8" x 2"	1704264
42	Self-Drilling Screw - 1/4" x 1"	1705198
43	Carriage Bolt - 5/16" x 1" - GR5	1704237
44	Nylon Lock Nut - 5/16"	1704297

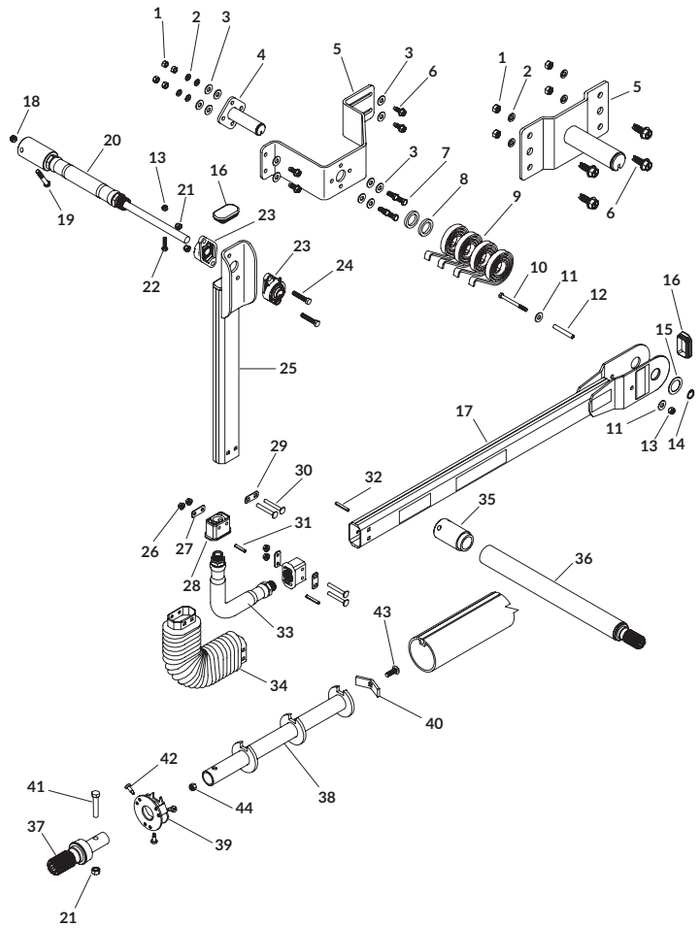

Table of Contents

Replacement Parts

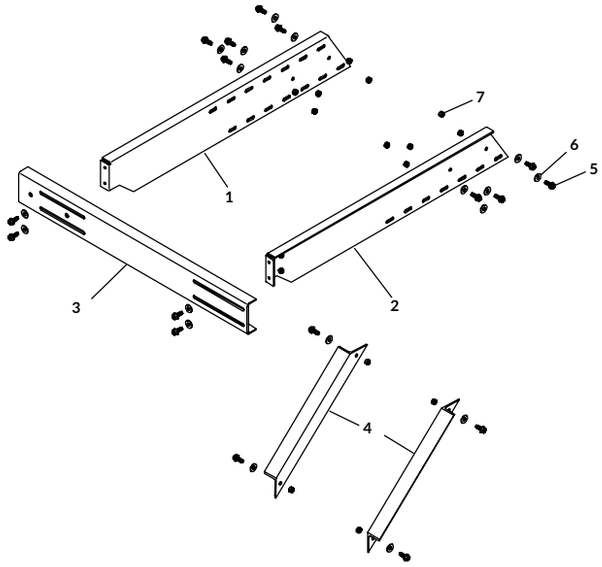

FRONT MOUNT BRACKETS

	DESCRIPTION	P/N
	KITS & HARDWARE	
	Front Mount Kit - Sloped [Includes: A, 1, 2, 3; 2 of 4]	1113002
A	Extension Bracket Hdw [Includes: 16 of 6 & 7; 20 of 5]	1112992
	PARTS	
1	Universal Extension Bracket - R	1113306
2	Universal Extension Bracket - L	1113307
3	Front Mtg Bracket - Sloped	1112178
4	Extended Extension Support Bracket	1112310
5	Self-Taping Screw - 3/8" x 1"	1700400
6	Flat Washer - 3/8"	1700429
7	Centerlock Hex Nut - 3/8"	1700418

*For sloped trailers in conjunction with vertical pivot mount bracket to help mount on vertical surface. Typically used on end dumps.

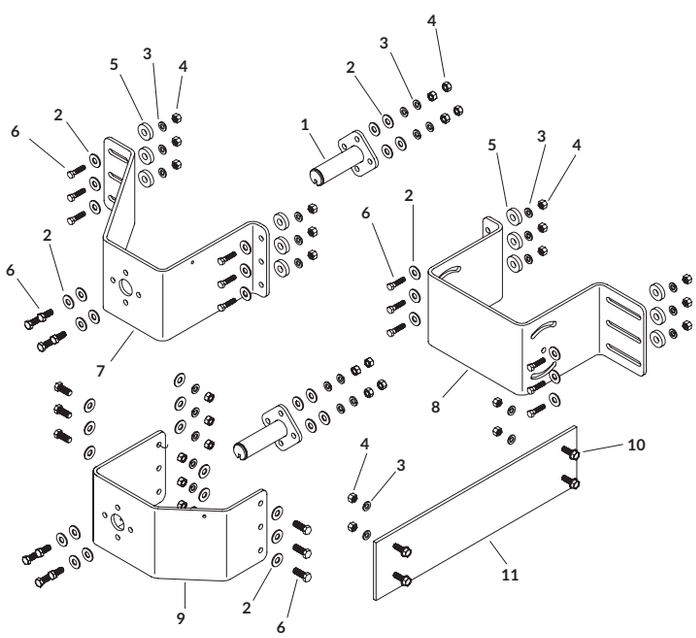

PIVOT MOUNT BRACKETS

	DESCRIPTION	P/N
	KITS & HARDWARE	
	Pivot Mnt Bracket Kit - 6" x 7-1/4" [Includes: A; 1; 7]	1132515
	Pivot Mnt Bracket Kit - 6" x 9-1/4" [Includes: A; 1; 7]	1132516
	Pivot Mnt Bracket Kit - 6" x 6" Standoff [Includes: B; 1; 8; 9]	1132519
	Pivot Mnt Bracket Kit - 6" x 8" Standoff [Includes: B; 1; 8; 9]	1132520
A	Pivot Bracket Hdw - 6" Vertical [Includes: 6 of 5; 10 of 6, 3 & 4; 14 of 2]	1121579
B	Pivot Bracket Hdw - 6" Sloped [Includes: 6 of 5; 16 of 6, 3 & 4; 26 of 2]	1121580
	PARTS	
1	Pivot Pin - 4 Spring	1116920
2	Flat Washer - 3/8"	1700429
3	Lock Washer - 3/8"	1700434
4	Hex Nut - 3/8"	1700407
5	Spacer Washer - 1/4" x 1" OD x .406"	1120291
6	Hex Head Cap Screw - 3/8" x 1-1/4"	1702891
7	Pivot Mnt Bracket - 6" x 7-1/4"	1121582
	Pivot Mnt Bracket - 6" x 9-1/4"	1121578
	Pivot Mnt Bracket - 6" x 10-1/4"	1124678
	Pivot Mnt Bracket - 6" x 12-1/4"	1121517
8	Pivot Mnt Bracket - 6" x 6" - Sloped	1121993
	Pivot Mnt Bracket - 6" x 8" - Sloped	1121994
	Pivot Mnt Bracket - 6" x 10" - Sloped	*1121995
9	Pivot Bracket - Sloped 6"	1121992
10	Self-Tapping Screw - 3/8" x 1"	1700400
11	Pivot Backer Plate - 7" x 16"	1121583
	Pivot Backer Plate - 7" x 20"	1121584
	Pivot Backer Plate - 7" x 24"	1122040

*Used on trailers with long, flat sloped front or rear.

Table of Contents

Replacement Parts

RETURNS - HEAVY-DUTY REAR CABLE

	DESCRIPTION	P/N
	KITS & HARDWARE	
	HD Rear Cable Return Kit [Includes: A; 1; 8; 9; 10; 11; 12; 18; 19; 2 of 7, 13 & 17; 3 of 20; 4 of 2 & 15; 5 of 14; 7 of 16]	1113025
	HD Rear Cable Return Kit - 3" [Includes: A; 1; 8; 9; 10; 11; 12; 18; 19; 2 of 7, 13 & 17; 3 of 20; 4 of 2 & 15; 5 of 14; 7 of 16]	*1124868
A	Cable Return Mounting Hdw [Includes: 3 of 4, 5 & 6]	1111469
	PARTS	
1	Hex Head Cap Screw - 1/4" x 2-1/4"	1702672
2	Machine Screw - #10-24 x 1"	1702654
3	Nylon Lock Hex Nut - 1/4"	1701543
4	Self-Tapping Screw - 3/8" x 1"	1700400
5	Lock Washer - 3/8"	1700434
6	Hex Nut - 3/8"	1700407
7	Machine Screw - #10-24 x 1-1/2"	1702656
8	Universal Cable Return Housing	1114728
9	Spacer Washer - 1-9/16"	1131010
10	Heavy-Duty Extension Spring	1702896
11	Velcro® Hook - 1" x 4"	1115206
12	Cable w/Return Strap	1114582
	Cable w/Return Strap - 3"	*1124870
13	Front Retainer Plate	1114691
14	Pulley - 1/16" Cable Groove	1703006
15	Plastic Spacer - 3/8"	1111056
16	Machine Screw w/Washer - #10-24	1702653
17	Rope Block Retainer Plate	1112997
18	Flat Washer - #10	1111054
19	Machine Screw - #10-24 x 1-1/4"	1702655
20	Rear Retainer Plate	1110913

*Used with 3" roll tubes.

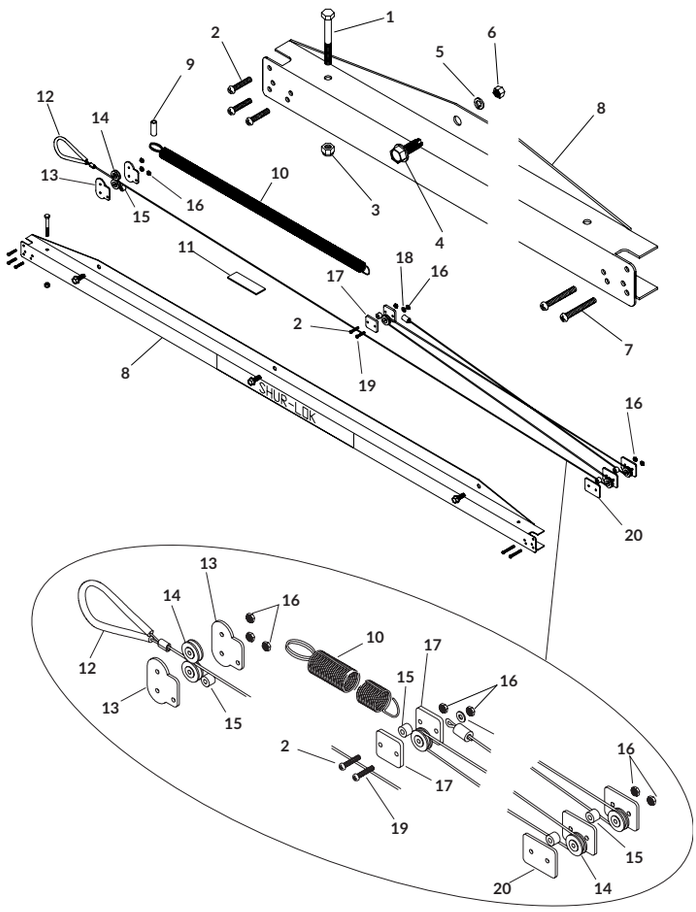

Table of Contents

Replacement Parts

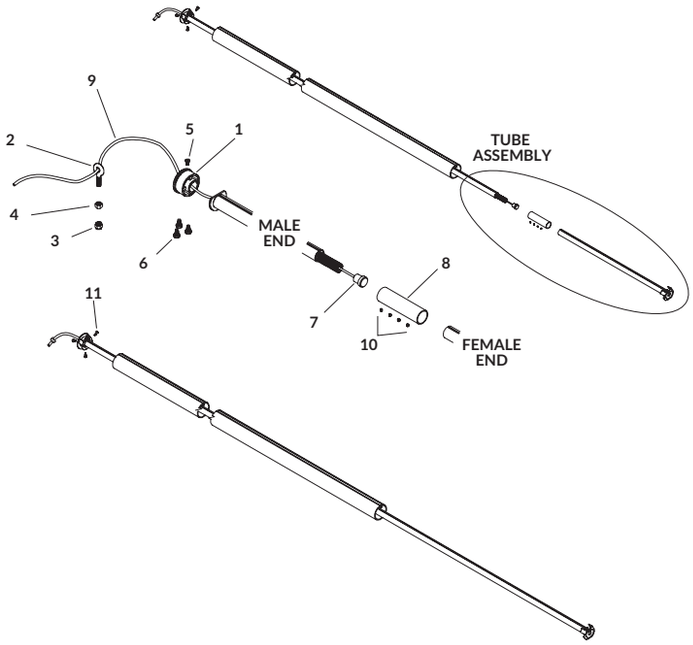

RETURNS - HEAVY-DUTY REAR SHUR-RETURN™

	DESCRIPTION	P/N
	KITS & HARDWARE	
	HD Shur-Return™ Kit [Includes: A & Tube Assy]	*1125119
	HD 2-Piece Shur-Return™ Kit [Includes: A; 7; 8; 9; 4 of 11 & Tube Assy]	*1125121
	HD Shur-Return™ Kit - 3" [Includes: B & Tube Assembly]	* **1125123
	HD 2-Piece Shur-Return™ Kit - 3" [Includes: B; 7; 8; 9; 4 of 11 & Tube Assy]	* **1125125
A	Shur-Return™ Hdw [Includes: 1; 2; 3; 4; 5; 5 of 6]	1107128
B	Shur-Return™ Hdw - 3" [Includes: 1; 2; 3; 4; 5; 3 of 11; 5 of 6]	**1124881
	PARTS	
1	Nylon End Plug	1100138
2	Eyebolt Anchor - 5/16"	1700717
3	Nylon Lock Hex Nut - 5/16"	1700419
4	Hex Nut - 5/16"	1700411
5	Self-Drilling Screw - #10-16 x 1/2"	1704743
6	Self-Tapping Screw - 1/4" x 1/2"	1700736
7	Spring Retainer Plug	1100827
8	Connector Sleeve	1107879
9	Shur-Return™ Rope - 12'	1100826
10	Hex Socket Set Screw - #10-32 x 3/16"	1701423
11	Self-Drilling Screw - 1/4" x 1"	**1705198

*Additional over length shipping charges apply.
**Used with 3" roll tubes.

Table of Contents

Replacement Parts

RETURNS - SHUR-STRAP™

	DESCRIPTION	P/N
	KITS & HARDWARE	
	Shur-Strap™ Return Kit [Includes: A; 1]	*1127295
	Shur-Strap™ Return Kit - 3" [Includes: B; 1]	* **1127491
A	Shur-Strap™ Return Hdw	1127296
B	Shur-Strap™ Return Hdw - 3"	**1127297
	PARTS	
1	Shur-Strap™ Return Assy - 12'-7"	*1127286
2	Replacement Webbing w/Connector Link	1128566

*Additional over length shipping charges apply.
**Used with 3" roll tubes.

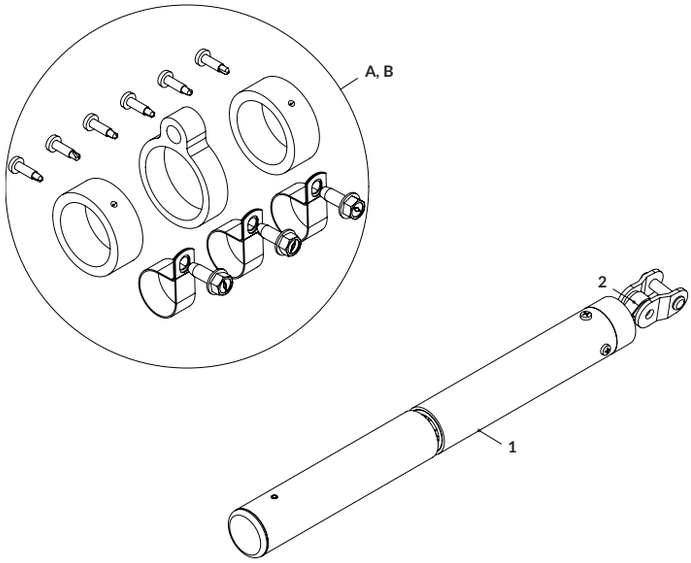

RETURNS - SHOCK CORD ROLL RETURN

	DESCRIPTION	P/N
	KITS	
	Shock Cord Roll Return Kit - 2" [Includes: 1; 2; 4; 5; 2 of 3 & 7; 6 of 6]	1114951
	Shock Cord Roll Return Kit - 3" [Includes: 1; 2; 4; 5; 2 of 3 & 7; 6 of 6]	1125583
	PARTS	
1	Shock Cord Eye Bracket	1703445
2	Shock Cord Tie-Down Strap	1114948
3	Self-Tapping Screw - 3/8" x 1"	1700400
4	Shock Cord - 11-1/2"	1122332
5	Roll Tube Eye	1114947
	Roll Tube Eye - 3"	1705552
6	Self-Drilling Screw - 1/4" x 1"	1705198
7	Rear Arm Retaining Collar	1704352
	Rear Arm Retaining Collar - 3"	1122256

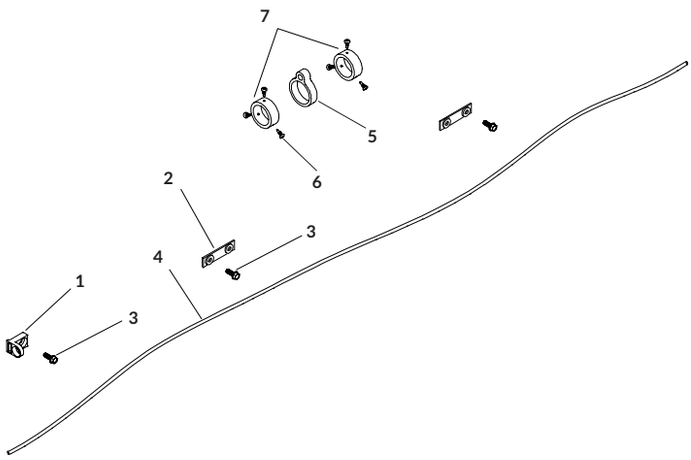

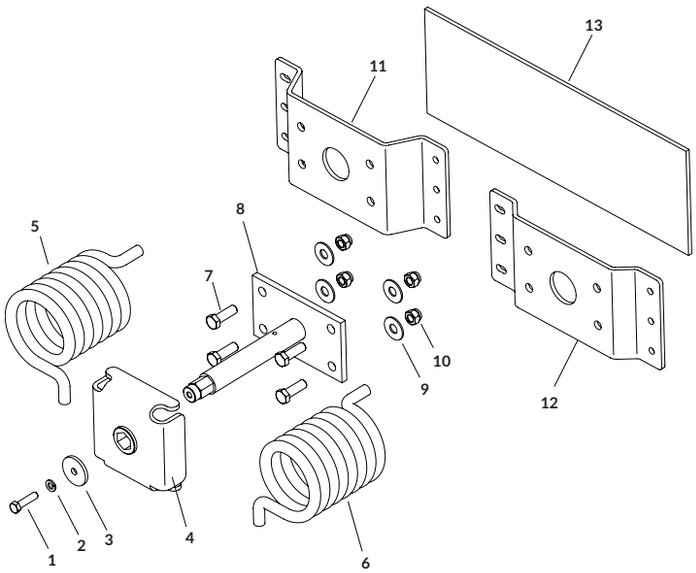

PIVOT ASSEMBLY

	DESCRIPTION	P/N
	PARTS	
1	Cap Screw - 3/8" x 1-1/2"	1705910
2	Lock Washer - 3/8"	1705909
3	Spring Catch Retaining Washer - Black	1126983
4	Spring Catch	1126799
5	Torsion Spring - Red - R	1705829
6	Torsion Spring - Black - L	1705828
7	Cap Screw - 1/2" x 1-1/2"	1705920
8	Spring Pivot Shaft	1126819
9	Flat Washer - 1/2"	1705911
10	Nylon Lock Nut - 1/2"	1705913
11	Pivot Mnt Bracket - 6" x 2-1/4"	1810205
12	Pivot Mnt Bracket - 6" x 1-1/4"	1810204
13	Pivot Backer Plate - 7" x 20"	1121584

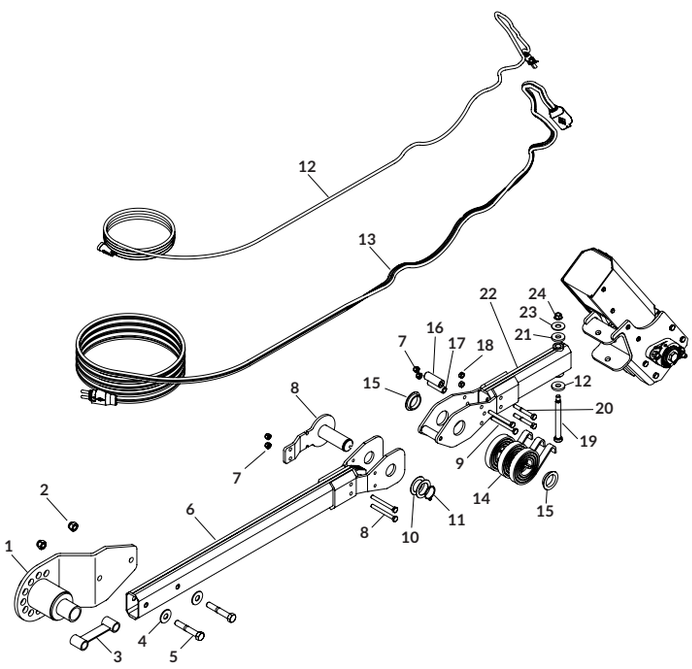

FRONT ARM ASSEMBLIES

	DESCRIPTION	P/N
	KITS	
	Front Arm Kit w/Motor [Includes: 1; 3; 6; 8; 11; 12; 13; 16; 17; 19; 22; 23; 24; 25; 2 of 2, 4, 5, 10, 15, 18, 20 & 21; 3 of 14; 4 of 7 & 9]	1810160
	Front Arm Kit w/Motor - Reverse Roll [Includes: 1; 3; 6; 8; 11; 12; 13; 16; 17; 19; 22; 23; 24; 25; 2 of 2, 4, 5, 10, 15, 18, 20 & 21; 3 of 14; 4 of 7 & 9]	1810211
	PARTS	
1	Spring Pivot	1126794
2	Nylon Lock Hex Nut - 1/2"	1702115
3	Dog Bone Spacer	1810181
4	Flat Washer - 1/2"	1702114
5	Hex Head Cap Screw - 1/2" x 3"	1702701
6	Lower Arm - Front	1810158
7	Nylon Lock Hex Nut - 5/16"	1700419
8	Pivot Pin - R	1810179
9	Hex Head Cap Screw - 5/16" x 3"	1702629
10	Flat Washer - 1-1/4" x 1-7/8"	1702890
11	Retaining Ring - 1-1/4"	1702888
12	Encoder Wire - 13'-6"	1705807
13	SMARTwire™ - 6 Ga. - Plug/Socket - 16'	1704827
14	Spiral Torsion Spring	1111027
15	Flange Bushing - 1.281" ID x 1.522" OD	1704468
16	Elbow Stop Tube	1810201
17	Spacer Tube - .35" ID x 2"	1810144
18	Nylon Lock Nut - 5/16"	1704454
19	Shoulder Bolt - 1/2" x 4-1/4" Thread - 3/8" x 5/8"	1706616
20	Cap Screw - 5/16" x 2-1/2" - Grade 5	1706615
21	Plastic Washer - .1875" x 1.25" Round	1810184
22	Upper Arm - Front	1810162
23	Flat Washer - 7/16"	1700430
24	Top Lock Flange Nut - 3/8"	1701283

Table of Contents

Replacement Parts

MOTOR MOUNT ASSEMBLY

	DESCRIPTION	P/N
	KITS	
	Motor Cover Kit - Apex™ [Includes: 17; 18; 19; 4 of 20]	1811880
	PARTS	
1	Drive Shaft	1127572
2	Cap Screw - 3/8” x 1-3/4”	1705680
3	Nylon Lock Nut - 3/8"	1701580
4	Nylon Lock Nut - 3/8"	1705918
5	Flange Bearing - 7/8" Hex	1704456
6	Nylon Lock Nut - 5/16"	1705919
7	Carriage Bolt - 3/8" x 1-1/2" - GR2	1705917
8	Button Head Cap Screw - 1/4" x 5/8"	1703327
9	Motor Shim Plate - Outer	1810175
10	Motor Shim Plate - Inner	1810174
11	Motor Mount	1810164
12	Cap Screw - 5/16" x 4-1/2"	1705895
13	Locking Collar w/Ring - 7/8”	1810207
14	Motor Cover Support Bracket	1810173
15	Ironside II™/Apex™ Motor	1127091
16	Button Head Cap Screw - 5/16" x 5/8"	1706617
17	Motor Cover - Front Panel	1810168
8	Motor Cover - Back Panel	1810169
19	Motor Cover - End Cap	1810172
20	Flange Cap Screw - #10-24 x 1/2"	1704308

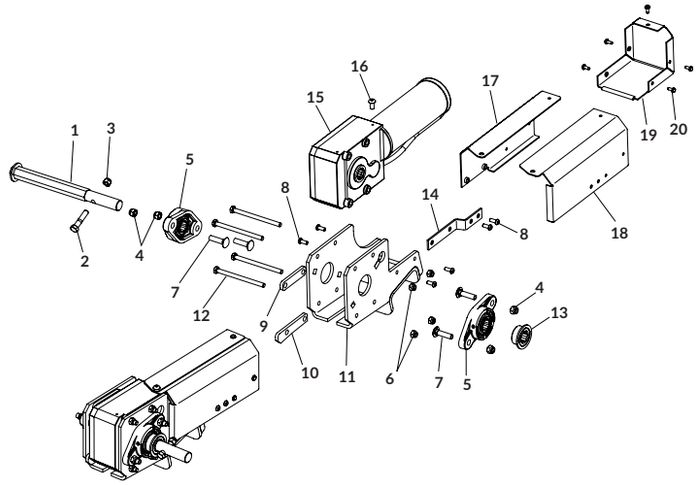

REAR ARM ASSEMBLIES

	DESCRIPTION	P/N
	KITS	
	Rear Arm Assy [Includes 1; 4; 8; 11; 13; 14; 15; 17; 18; 19; 23; 24; 2 of 5, 7, 9, 16, 20, 21 & 22; 3 of 10; 4 of 6 & 12; 12 of 2 & 3]	1810161
	Rear Arm Assy - Reverse Roll [Includes 1; 4; 8; 11; 13; 14; 15; 17; 18; 19; 23; 24; 2 of 5, 7, 9, 16, 20, 21 & 22; 3 of 10; 4 of 6 & 12; 12 of 2 & 3]	1810212
	PARTS	
1	Upper Arm Swivel Connector	1810200
2	Hex Head Cap Screw - 5/16" x 3/4"	1701045
3	Lock Washer - 5/16"	1700433
4	Rear Upper Arm	1810195
5	Nylon Lock Nut - 5/16"	1704454
6	Nylon Lock Hex Nut - 5/16"	1700419
7	Cap Screw - 5/16" x 2-1/2" - Grade 5	1706615
8	Spacer Tube - .35" ID x 2"	1810144
9	Flange Bushing - 1.281" ID x 1.522" OD	1704468
10	Spiral Torsion Spring	1111027
11	Elbow Stop Tube	1810201
12	Hex Head Cap Screw - 5/16" x 3"	1702629
13	Elbow Stop	1810178
14	Pivot Pin - L	1810193
15	Rear Lower Arm - Elbow	1810186
16	Flat Washer - 1-1/4" x 1-7/8"	1702890
17	Retaining Ring - 1-1/4"	1702888
18	Lower Arm Rotator	1810190
19	Lower Arm Tube - Rear - Pivot	1810185
20	Nylon Lock Hex Nut - 1/2"	1702115
21	Flat Washer - 1/2"	1702114
22	Hex Head Cap Screw - 1/2" x 3"	1702701
23	Dog Bone Spacer	1810181
24	Spring Pivot	1126794

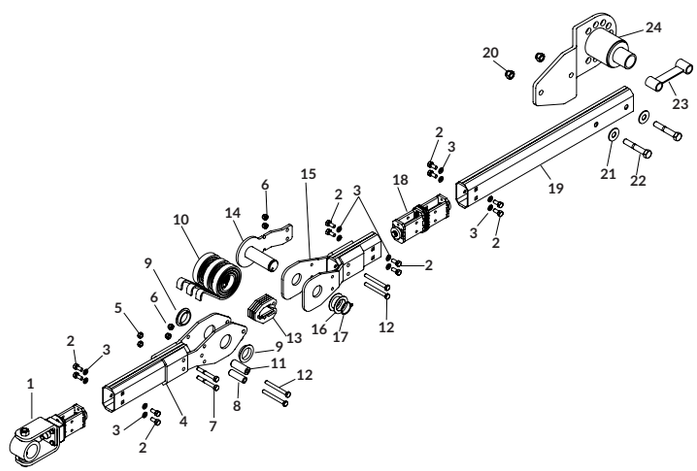

Table of Contents

Replacement Parts

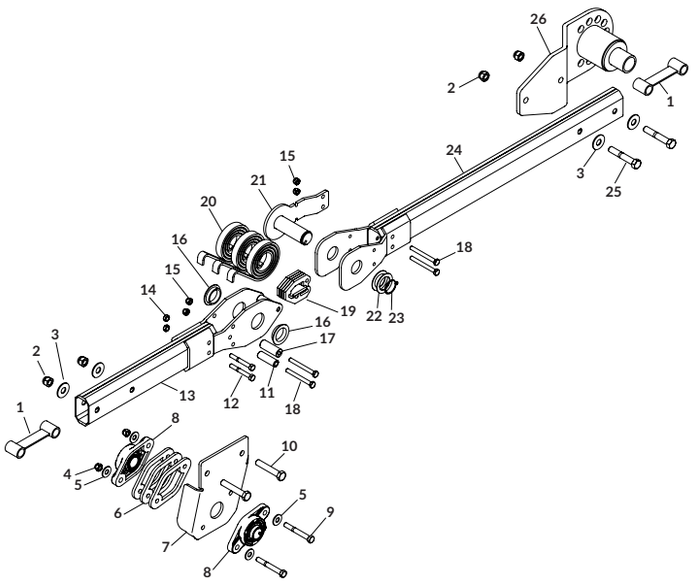

REAR LIFT HINGE ASSEMBLIES

	DESCRIPTION	P/N
	KITS	
	Rear Arm Assy Lift Gate [Includes 7; 11; 13; 17; 19; 21; 23; 24; 26; 2 of 1, 4, 8, 9, 10, 12, 14, 16, 22 & 25; 3 of 6 & 20; 4 of 2, 3, 5 & 18]	1810215
	Rear Arm Assy Lift Gate - Reverse Roll [Includes 7; 11; 13; 17; 19; 21; 23; 24; 26; 2 of 1, 4, 8, 9, 10, 12, 14, 16, 22 & 25; 3 of 6 & 20; 4 of 2, 3, 5 & 18]	1810216
	PARTS	
1	Dog Bone Spacer	1810181
2	Nylon Lock Hex Nut - 1/2"	1702115
3	Flat Washer - 1/2"	1702114
4	Nylon Lock Nut - 3/8"	1701580
5	Flat Washer - 3/8"	1700429
6	Upper Arm Bearing Spacer Plate	1810338
7	Upper Arm Bearing Bracket	1810214
8	Flange Bearing - 1" OD - 2 Bolt	1119560
9	Hex Head Cap Screw - 3/8" x 3"	1700371
10	Hex Head Cap Screw - 1/2" x 2-3/4"	1704809
11	Spacer Tube - .35" ID x 2"	1810144
12	Cap Screw - 5/16" x 2-1/2" - Grade 5	1706615
13	Upper Arm - Rear - Lift Hinge	1810213
14	Nylon Lock Nut - 5/16"	1704454
15	Nylon Lock Hex Nut - 5/16"	1700419
16	Flange Bushing - 1.281" ID x 1.522" OD	1704468
17	Elbow Stop Tube	1810201
18	Hex Head Cap Screw - 5/16" x 3"	1702629
19	Elbow Stop	1810178
20	Spiral Torsion Spring	1111027
21	Pivot Pin - L	1810193
22	Flat Washer - 1-1/4" x 1-7/8"	1702890
23	Retaining Ring - 1-1/4"	1702888
24	Lower Arm - Front	1810158
25	Hex Head Cap Screw - 1/2" x 3"	1702701
26	Spring Pivot	1126794

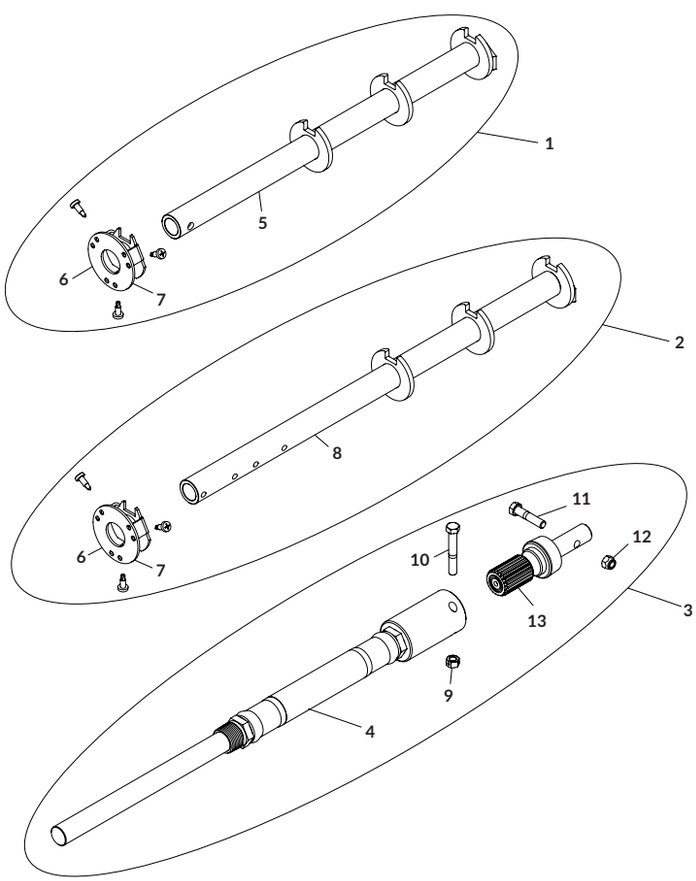

ROLL TUBE ADAPTERS

	DESCRIPTION	P/N
	KITS	
1	Cartridge Kit - 3" Alum - 20" Drive	1131389
2	Cartridge Kit - 3" Alum - 24.25" Drive	1131390
3	Flex Adapter Shaft Kit - Lift Gate	1131391
	PARTS	
4	Flex Adapter Shaft - Lift Gate	1810339
5	Front Cartridge Assy - 20" Drive	1125921
6	Roll Tube End Cap - Rear	1121040
7	Self-Drilling Screw - 1/4" x 3/4"	1700398
8	Rear Cartridge Assy - 24-1/4"	1125923
9	Centerlock Hex Nut - 3/8"	1700418
10	Hex Head Cap Screw - 3/8" x 2-1/2"	1702573
11	Cap Screw - 3/8" x 1-3/4"	1705680
12	Nylon Lock Nut - 3/8"	1701580
13	Manual Crank Spline - 7/8" Shaft - 3"	1810341

Table of Contents

Replacement Parts

FRONT ARM ASSEMBLIES

	DESCRIPTION	P/N
	KITS	
	Front Arm Assy [Includes: 1; 2; 3; 4; 5; 6; 8; 15; 16; 17; 20; 21; 2 of 9, 10, 12, 13, 18 & 19; 3 of 22; 4 of 14; 8 of 7]	1126838
	PARTS	
1	Upper Arm Universal	1126803
2	Flanged Nylon Lock Nut - 3/8"	1705916
3	Shoulder Bolt - 1/2" - 3/8" x 1/2" Thread	1705896
4	Upper Arm Tube	1126801
5	Self-Drilling Screw - 1/4" x 3/4"	1700398
6	Wire Clip - 3/4" ID	1702108
7	Nylon Lock Nut - 1/2"	1705913
8	Upper Hinge	1127008
9	Hex Head Cap Screw - 1/2" x 2-3/4"	1705915
10	Lower Arm Hinge Spacer	1127007
11	Edge Guard - 5/16" x 1-5/8"	1704396
12	Flat Washer - Bronze - 1/8" x 1-1/2"	1704810
13	Lower Arm Hinge Plate	1127006
14	Hex Head Cap Screw - 1/2" x 3-1/4"	1705914
15	Lower Arm Tube	1126977
16	Spring Pivot	1126794
17	Dog-Bone Spacer	1126813
18	Flat Washer - 1/2"	1705911
19	Hex Head Cap Screw - 1/2" x 3-1/2"	1705912
20	Encoder Wire Assy - 18 Ga. Coiled	1705876
21	SMARTwire™ Socket x Plug - 6 Ga. x Coiled	1126840
22	Cable Tie - 8"	1703231

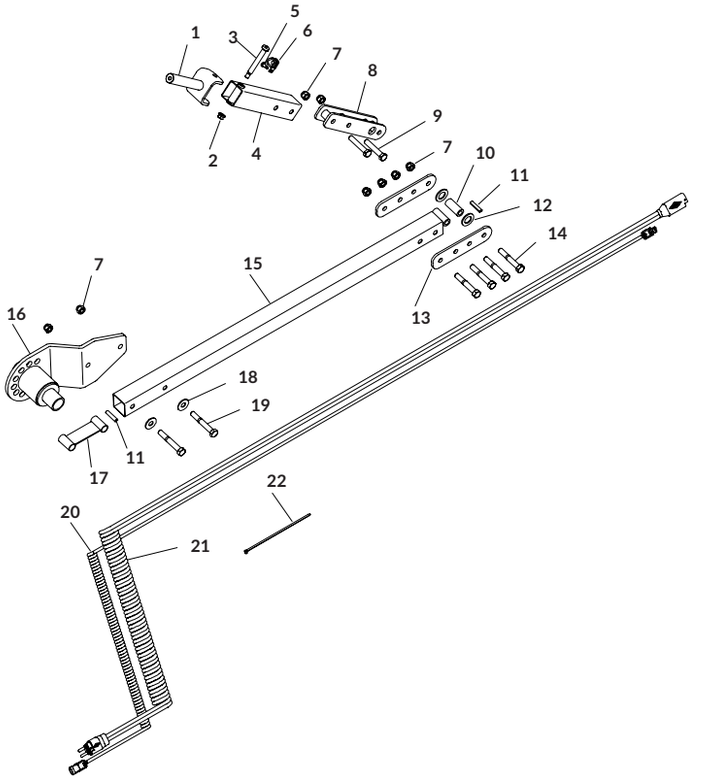

FRONT ARM ASSEMBLIES W/MOTORS

	DESCRIPTION	P/N
	KITS	
	Motor/Front Arm Assy [Includes: 1; 2; 3; 4; 5; 6; 8; 9; 2 of 10; 4 of 7]	1126841
	Motor/Front Arm Assy - Rev Roll [Includes: 1; 2; 3; 4; 5; 6; 8; 9; 2 of 10; 4 of 7]	1126842
	PARTS	
1	Motor Mount Assy	1126836
	Motor Mount Assy - Rev Roll	1126837
2	Cap Screw - 3/8" x 1-1/2"	1705910
3	Lock Washer - 3/8"	1705909
4	Spring Catch Retaining Washer - Black	1126983
5	Motor Bracket Decal	1705878
6	Motor Cover Kit - IronSide II™	1126811
7	Flange Cap Screw - #10-24 x 1/2"	1704308
8	Front Arm Assy	1126838
	Front Arm Assy - Rev Roll	1126839
9	Arm Decal	1705877
10	Cable Tie - 15"	1701058

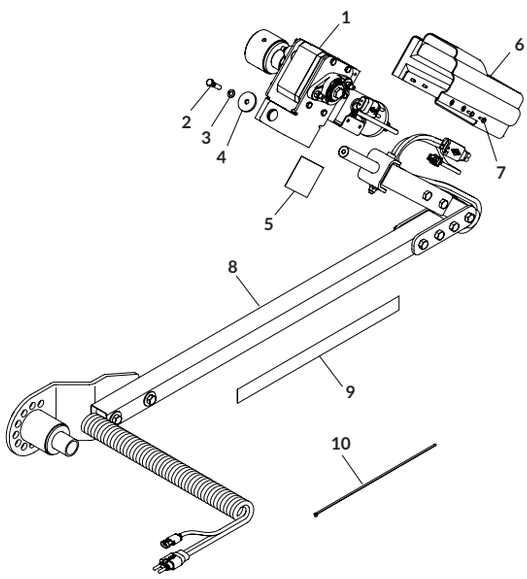

MOTOR MOUNT ASSEMBLIES

	DESCRIPTION	P/N
	KITS	
	Motor Mount Assy [Includes: 1; 8; 9;10; 11; 13; 15; 16; 17; 18; 19; 2 of 4, 5 & 12; 4 of 2, 3, 6, 7 & 14]	1126836
	PARTS	
1	Drive Shaft Weldment	1127063
2	Cap Screw - 5/16" x 4-1/2"	1705895
3	Nylon Lock Nut - 3/8"	1705918
4	Flange Bearing - 7/8" Hex	1704456
5	Motor Mount Plate	1126805
6	Spacer Washer - 1/4" x .75" OD x .406"	1126812
7	Carriage Bolt - 3/8" x 1-1/2" - GR2	1705917
8	Hex Head Cap Screw - 1/4" x 3/4"	1703959
9	Lock Washer - 1/4"	1700436
10	Ironside II™/Apex™ Motor	1127091
11	Motor Mount Cover Assy	1126809
12	Lock Washer - 5/16"	1700433
13	Hex Head Cap Screw - 5/16" x 1/2"	1703171
14	Nylon Lock Nut - 5/16"	1705919
15	Hex Head Cap Screw - 5/16" x 3/4"	1701045
16	Front Roll Tube Connector	1120738
17	Spring Catch Retaining Washer - Black	1126983
18	Lock Washer - 3/8"	1705909
19	Cap Screw - 3/8" x 1-1/2"	1705910

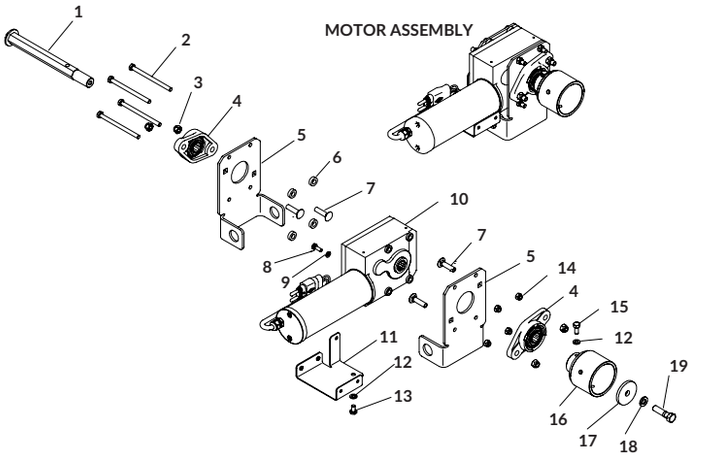

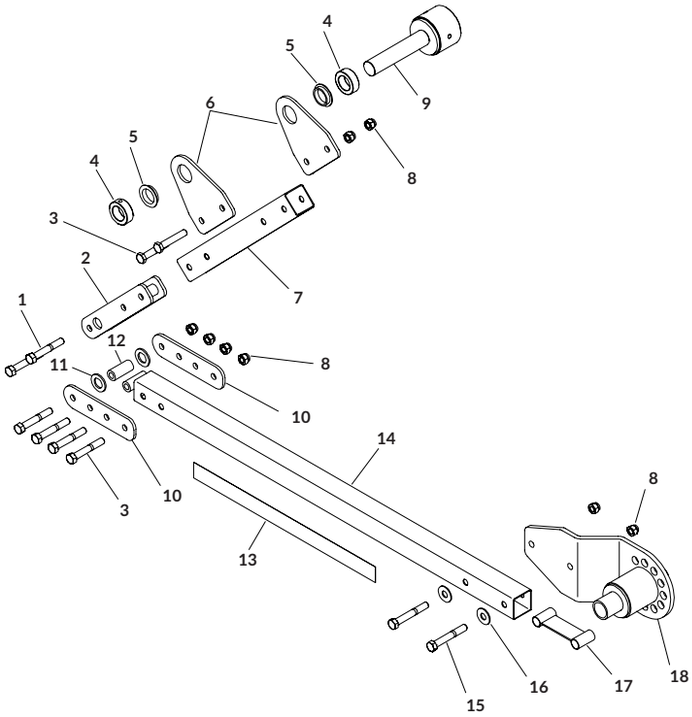

REAR ARM ASSEMBLIES

	DESCRIPTION	P/N
	KITS	
	Rear Arm Assy [Includes: 2; 7; 9; 13; 14; 17; 18; 2 of 1, 4, 5, 6, 10, 11, 12, 15 & 16; 6 of 3; 10 of 8]	1126843
	PARTS	
1	Hex Head Cap Screw - 1/2" x 2-3/4"	1705915
2	Upper Hinge	1127008
3	Hex Head Cap Screw - 1/2" x 3-1/4"	1705914
4	Locking Collar	1704807
5	Flange Bushing - 1.281" ID x 1.522" OD	1704468
6	Idler Shaft Bearing Plate - Black	1127009
7	Rear Upper Arm Tube - Black	1126976
8	Nylon Lock Nut - 1/2"	1705913
9	Rear Roll Tube Connector	1120736
10	Lower Arm Hinge Plate	1127006
11	Flat Washer - Bronze - 1/8" x 1-1/2"	1704810
12	Lower Arm Hinge Spacer	1127007
13	Arm Decal	1705877
14	Lower Arm Tube	1126977
15	Hex Head Cap Screw - 1/2" x 3-1/2"	1705912
16	Flat Washer - 1/2"	1705911
17	Dog-Bone Spacer	1126813
18	Spring Pivot	1126794

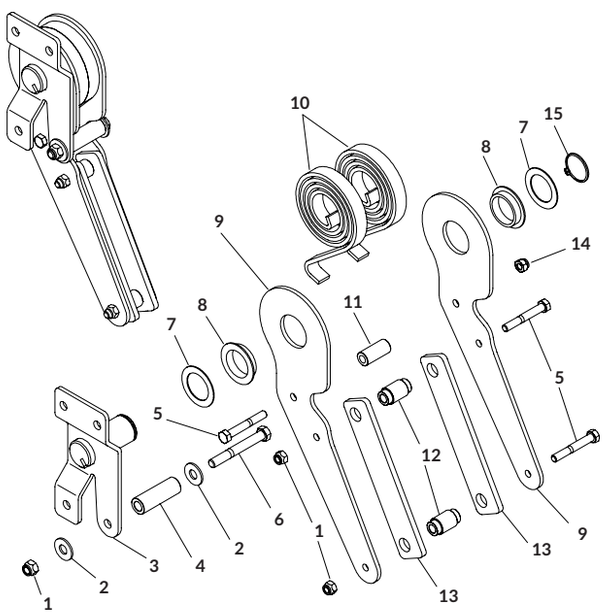

PUSH-OUT ASSEMBLIES - FRONT

	DESCRIPTION	P/N
	KITS	
	Push-Out Assy - Front [Includes: 1; 3; 4; 6; 9; 11; 12; 15; 2 of 2, 7, 8, 10 & 13; 3 of 5 & 14]	1127015
	PARTS	
1	Nylon Lock Nut - 3/8"	1705918
2	Flat Washer - 3/8" - USS	1705921
3	Push-Out Pivot - Front	1127014
4	Push-Out Spring Catch	1120753
5	Cap Screw - 5/16" x 2-1/4"	1705923
6	Cap Screw - 3/8" x 3"	1705922
7	Flat Washer - 1-1/4" x 1-7/8"	1705925
8	Flange Bushing - 1.281" ID x 1.522" OD	1704468
9	Push-Out Plate - Black	1127010
10	Spiral Torsion Spring	1111027
11	Push-Out Stop Tube	1127011
12	Push-Plate Spacer - Black	1127012
13	Push-Out Wear Band	1120754
14	Nylon Lock Nut - 5/16"	1705919
15	Retaining Ring - 1-1/4"	1702888

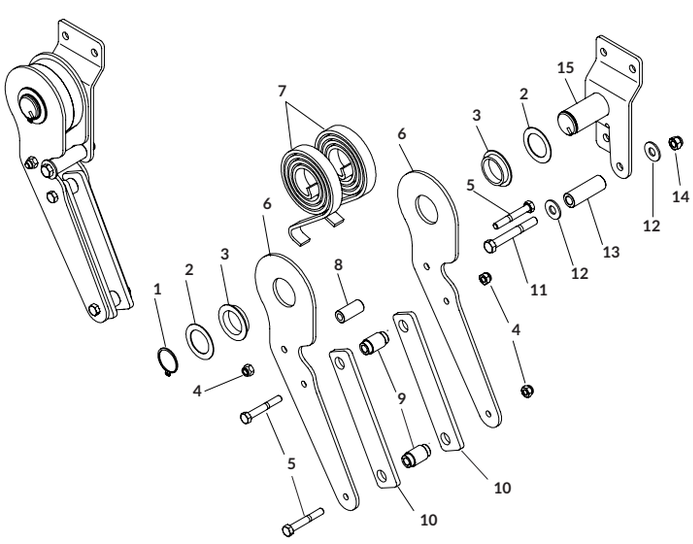

PUSH-OUT ASSEMBLIES - REAR

	DESCRIPTION	P/N
	KITS	
	Push-Out Assy - Rear [Includes: 1; 8; 11; 12; 13; 14; 15; 2 of 2, 3, 6, 7, 9 & 10; 3 of 4 & 5]	1127016
	PARTS	
1	Retaining Ring - 1-1/4"	1702888
2	Flat Washer - 1-1/4" x 1-7/8"	1705925
3	Flange Bushing - 1.281" ID x 1.522" OD	1704468
4	Nylon Lock Nut - 5/16"	1705919
5	Cap Screw - 5/16" x 2-1/4"	1705923
6	Push-Out Plate - Black	1127010
7	Spiral Torsion Spring	1111027
8	Push-Out Stop Tube	1127011
9	Push-Plate Spacer - Black	1127012
10	Push-Out Wear Band	1120754
11	Cap Screw - 3/8" x 3"	1705922
12	Flat Washer - 3/8" - USS	1705921
13	Push-Out Spring Catch	1120753
14	Nylon Lock Nut - 3/8"	1705918
15	Push-Out Pivot - Rear	1127013

SPRING ASSEMBLIES

	DESCRIPTION	P/N
	PARTS	
1	Cap Screw - 3/8" x 1-1/2"	1705910
2	Lock Washer - 3/8"	1705909
3	Spring Catch Retaining Washer - Black	1126983
4	Spring Catch	1126799
5	Torsion Spring - Red - R	1705829
6	Torsion Spring - Black - L	1705828
7	Cap Screw - 1/2" x 1-1/2"	1705920
8	Spring Pivot Shaft	1126819
9	Flat Washer - 1/2"	1705911
10	Nylon Lock Nut - 1/2"	1705913

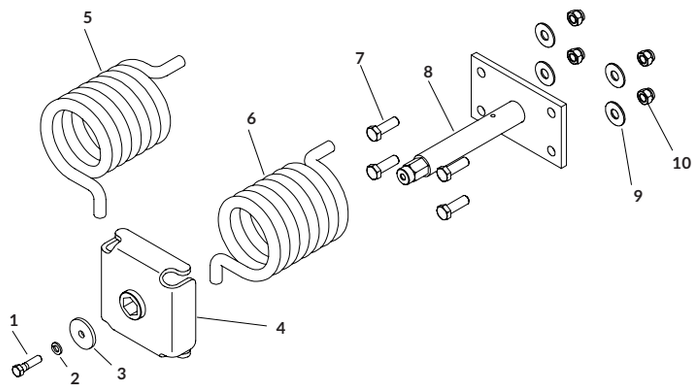

SUPPORT BRACKETS

	DESCRIPTION	P/N
	PARTS	
1	Support Tube	1126824
2	Support Bracket	1126810

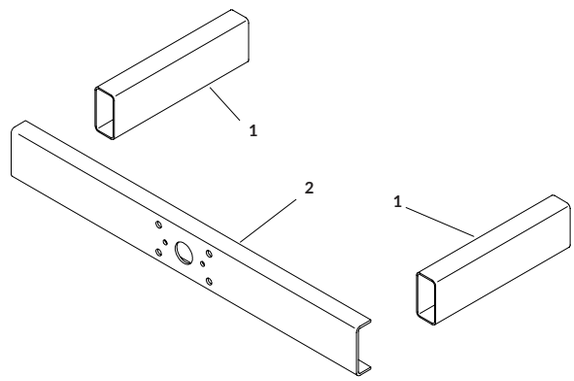

TARP CRADLE

	DESCRIPTION	P/N
	PARTS	
1	Tarp Cradle Extension	1121980
2	Tarp Cradle	1120748
3	Tarp Cradle Gusset	1121979
4	Tarp Retainer Hook	1120740
5	Nylon Lock Nut - 3/8"	1705918
6	Fixed Tube Clamp	1126978
7	Fixed Tube Anchor	1120733

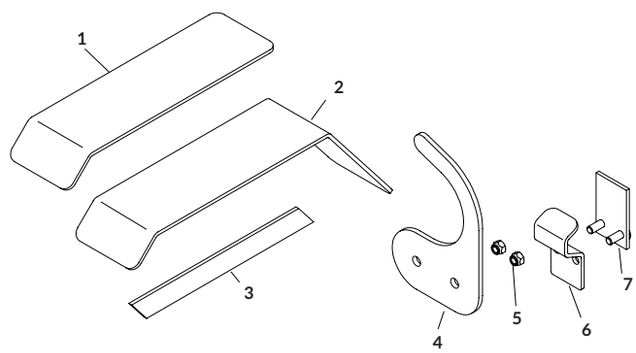

TARP TUBES

	DESCRIPTION	P/N
	PARTS	
1	Plastic End Plug	1700523
2	Self-Drilling Screw - 1/4" x 3/4"	1700398
3	Fixed Tube - 1-1/8" x 8'	1706156
	Fixed Tube - 1-1/8" x 11'	1706155
	Fixed Tube - 1-1/8" x 16'	1700051
	Fixed Tube - 1-1/8" x 20'	1700049
4	Alum Roll Tube - 3.55" x 20'	1120913
	Alum Roll Tube - 3.55" x 10'	1121609
5	Traction Wheel	1705706
6	Alum Splice Tube - 3.55"	1120911
7	Plastic U-Clamp	1701354
8	Hex Head Cap Screw - 3/8" x 1"	1701061
9	Lock Washer - 3/8"	1700434
10	Flat Washer - 3/8"	1700429
11	Self-Drilling Screw - #12 x 1-3/4"	1705415
12	Flat Washer - #10	1111054
13	Blind Rivet - 1/4"	1700472
14	Thread Lock	*1809211

*These items are NOT shown in the drawing.

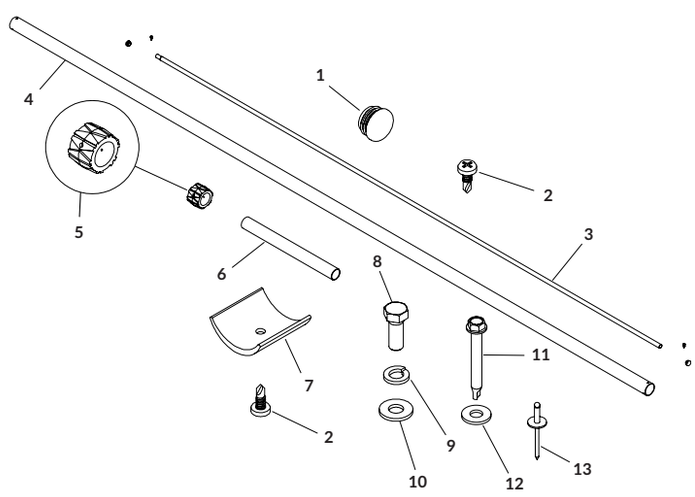

Table of Contents

Replacement Parts

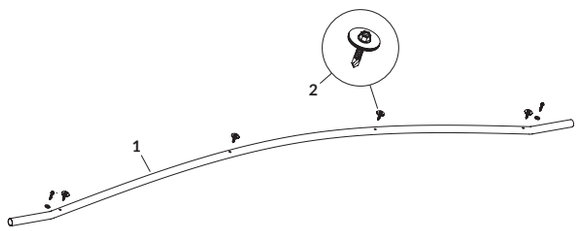

SHUR-TRAK™ II BOW ASSEMBLIES

	DESCRIPTION	P/N
	KITS	
1	Bow w/Screws - 12" Rise - 72" to 77"	1117527
	Bow w/Screws - 12" Rise - 78" to 83"	1117528
	Bow w/Screws - 12" Rise - 84" to 89"	1117542
	Bow w/Screws - 12" Rise - 90" to 95"	1110959
	Bow w/Screws - 12" Rise - 96" to 101"	1110960
	Bow w/Screws - 12" Rise - 102" to 104"	1111382
	Bow w/Screws - 16" Rise - 90" to 95"	1110961
	Bow w/Screws - 16" Rise - 96" to 101"	1110962
	Bow w/Screws - 16" Rise - 102" to 104"	1111381
	PARTS	
2	Screw/Rubber Washer Set - 3/4"	1701520

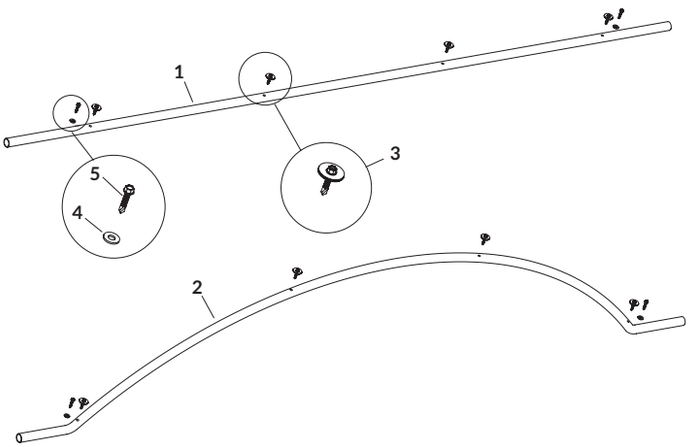

SHORTSTOP™ BOW ASSEMBLIES

	DESCRIPTION	P/N
	KITS	
1	Bow Kit - Flat - 72" to 78"	1117540
	Bow Kit - Flat - 79" to 85"	1117534
	Bow Kit - Flat - 92"	1116089
	Bow Kit - Flat - 96"	1116093
	Bow Kit - Flat - 102"	1116097
2	Bow Kit - 6" Rise - 72" to 78"	1117536
	Bow Kit - 6" Rise - 79" to 85"	1117530
	Bow Kit - 6" Rise - 92"	1116086
	Bow Kit - 6" Rise - 96"	1116090
	Bow Kit - 6" Rise - 102"	1116094
	Bow Kit - 12" Rise - 72" to 78"	1117538
	Bow Kit - 12" Rise - 79" to 85"	1117532
	Bow Kit - 12" Rise - 92"	1116087
	Bow Kit - 12" Rise - 96"	1116091
	Bow Kit - 12" Rise - 102"	1116095
	Bow Kit - 18" Rise - 92"	1116088
	Bow Kit - 18" Rise - 96"	1116092
	Bow Kit - 18" Rise - 102"	1116096
	PARTS	
3	Screw/Rubber Washer Set - 3/4"	1701520
4	Flat Washer - 1/4"	1700427
5	Self-Drilling Screw - #12 x 1"	1701471

Table of Contents

Replacement Parts

SHUR-TRAK™ II BOW SHANKS

	DESCRIPTION	P/N
	KITS & HARDWARE	
	Rear Bow Stabilizer Shank Kit [Includes: D; 2; 2 of 10 & 11]	1116898
	Twist-Lok™ Windguard & Shank Kit [Includes: B; 9; 10; 11; 21]	1115563
	Twist-Lok™ Windguard Shank Kit [Includes: E; 11]	1113879
	Twist-Lok™ Ext. Windguard & Shank Kit [Includes: B; 8; 10; 11; 21]	1115564
	Twist-Lok™ Ext. Windguard Shank Kit [Includes: E; 8]	1114707
	Twist-Lok™ Intermediate Shank Kit [Includes: 6; 7; 9]	1114027
	Twist-Lok™ Ext Intermediate Shank Kit [Includes: 8; 7; 9]	1114710
	Windguard Kit [Includes: B; 1; 3; 4; 5]	1115562
	Continuous Windguard Kit [Includes: C; 1; 3; 4; 5]	1117556
	Fixed Rear High-Lift Kit [Includes: 2 of 26; 4 of 27; 6 of 7]	1111599
	Intermediate High-Lift Kit [Includes: 2 of 27; 6 of 7]	1111598
	Front Bow Stop Kit [Includes: 24; 2 of 1]	1110387
	Bridge Plate Kit [Includes: 22; 2 of 23]	1110395
A	Windguard Wheel Assy [Includes: 15; 18; 19; 2 of 17]	1115097
B	Windguard Arm Assy [Includes: A; 12; 2 of 13 & 16; 4 of 14]	1115227
C	Offset Windguard Arm Assy [Includes: A; 12; 2 of 13 & 16; 4 of 14]	1117526
D	Double Rear Bow Hdw. [Includes: 2 of 1, 3, 4, 5, 9 & 27]	1116882
E	Windguard Shank Hdw. [Includes: 3; 4; 5; 3 of 1]	1110398
	PARTS	
1	Self-Tapping Screw - 3/8" x 1"	1700400
2	Rear Bow Stabilizer Bracket	1116881
3	Flat Washer - 5/16"	1700428
4	Lock Washer - 5/16"	1700433
5	Hex Head Cap Screw - 5/16" x 2"	1701420
6	Twist-Lok™ Intermediate Bow Shank	1113324
7	Screw/Rubber Washer Set - 3/4"	1701520
8	Twist-Lok™ Ext. Intermediate Bow Shank	1113325
	Twist-Lok™ Ext. Windguard Bow Shank	1114712
9	Self-Drilling Screw - 1/4" x 3/4"	1700398
10	Bow Reinforcement Tube - 8-5/8"	1107973
11	Twist-Lok™ Windguard Bow Shank	1113876
12	Windguard Arm	1115094
	Windguard Arm - Offset	1117202
13	Nylon Lock Nut - 3/8"	1701580
14	Flat Washer - 3/8" - SAE	1701176
15	Windguard Adjustment Plate	1115095
16	Hex Head Cap Screw - 3/8" x 1-1/4"	1702891
17	Flange Bearing - 1-1/8" OD x 1/2" Bore	1702627
18	Windguard Wheel	1703279
19	Button Head Cap Screw - 1/2 x 1-1/2"	1703444
20	Alum. Side Mount Latchplate - 4'	1100749
	Alum. Side Mount Latchplate - 6'	1700802
21	Windguard Anchor	1115367
22	Bridge Plate	1108080
23	Self-Drilling Screw - #12 x 1"	1701471
24	Bow Stop	1109151
25	Fixed Rear High-Lift Weldment	1111576
26	Fixed Rear High-Lift Weldment	1111575
27	Cable Clamp	1701441

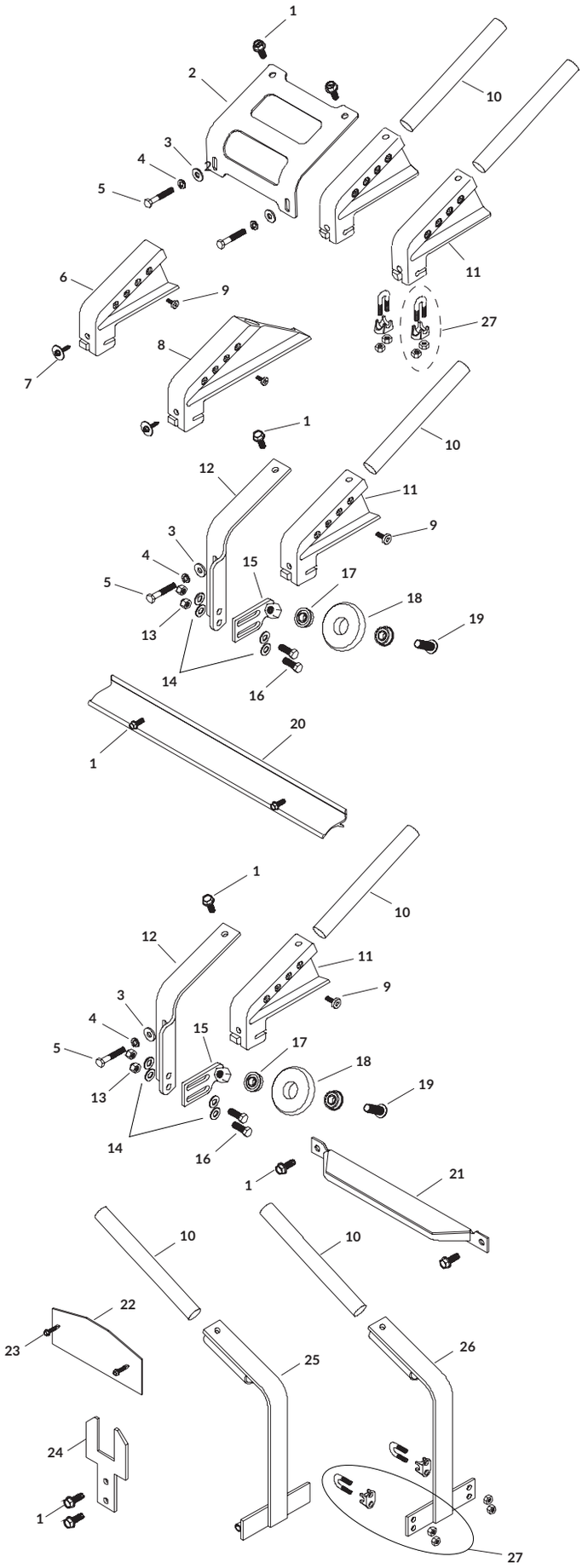

Table of Contents

Replacement Parts

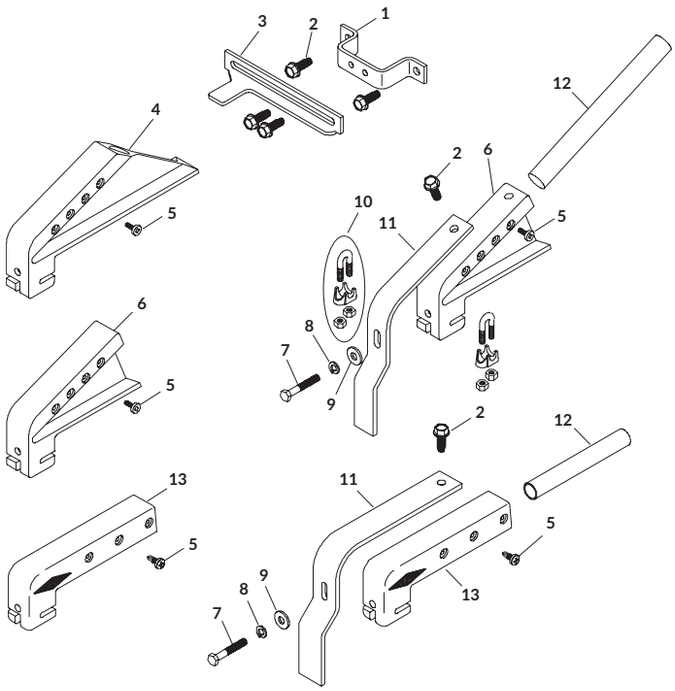

SHUR-TRAK™ II BOW SHANKS - ADJUSTABLE STOP

	DESCRIPTION	P/N
	KITS & HARDWARE	
	Twist-Lok™ Fixed Rear Shank Kit - L [Includes: A; 3; 6; 12]	1116517
	Twist-Lok™ Fixed Rear Shank Kit - R [Includes: A; 3; 6; 12]	1116518
	Twist-Lok™ Ext Fixed Rear Shank Kit - L [Includes: A; 3; 4; 12]	1116519
	Twist-Lok™ Ext Fixed Rear Shank Kit - R [Includes: A; 3; 4; 12]	1116520
	ShortStop™ Twist-Lok™ Fixed Rear Shank Kit - L [Includes: B; 3; 12; 13]	1116150
	ShortStop™ Twist-Lok™ Fixed Rear Shank Kit - R [Includes: B; 3; 12; 13]	1115933
A	Fixed Shank Hdw. [Includes: 1; 5; 7; 8; 9; 11; 2 of 10; 5 of 2]	1116516
B	ShortStop™ Fixed Shank Hdw. [Includes: 1; 5; 7; 8; 9; 11; 2 of 10; 5 of 2]	1116149
	PARTS	
1	ShortStop™ Adjustable Bracket Mount	1115929
2	Self-Tapping Screw - 3/8" x 1"	1700400
3	Adjustable Bow Stop - R	1115934
	Adjustable Bow Stop - L	1115919
4	Twist-Lok™ Ext Windguard Bow Shank	1114712
5	Self-Drilling Screw - 1/4" x 3/4"	1700398
6	Twist-Lok™ Windguard Bow Shank	1113876
7	Hex Head Cap Screw - 5/16" x 2"	1701420
8	Lock Washer - 5/16"	1700433
9	Flat Washer - 5/16"	1700428
10	Cable Clamp	1701441
11	Fixed Shank Support Bracket	1116377
	ShortStop™ Fixed Shank Support Bracket	1115927
12	Bow Reinforcement Tube - 8-5/8"	1107973
	Bow Reinforcement Tube - 6-1/2"	1115490
13	Twist-Lok™ ShortStop™ Bow Shank	1703486

NOTE: Adjustable Stop Kits are NOT compatible with rear bow stabilizer.

Table of Contents

Replacement Parts

SHUR-TRAK™ II SHORTSTOP™ BOW SHANKS

	DESCRIPTION	P/N
	KITS & HARDWARE	
	ShortStop™ Rear Bow Stabilizer Shank Kit [Includes: D; 2; 2 of 6 & 7]	1116897
	Twist-Lok™ ShortStop™ Windguard & Shank Kit [Includes: B; E; 6; 7; 21]	1116152
	Twist-Lok™ ShortStop™ Windguard Shank Kit [Includes: E; 6; 7]	1115932
	Twist-Lok™ ShortStop™ Intermediate Shank Kit [Includes: E; 6]	1116151
	High-Lift Fixed Rear Shank Kit [Includes: 1; 7; 8; 11; 2 of 9]	1115532
	High-Lift Intermediate Shank Kit [Includes: 1; 7; 8; 10]	1115533
	Front Bow Stop Kit [Includes: 22; 2 of 1]	1110387
	Bridge Plate Kit [Includes: 23; 2 of 24]	1110395
	ShortStop™ Windguard Kit [Includes: B; 1; 3; 4; 5]	1116156
	ShortStop™ Continuous Windguard Kit [Includes: C; 1; 3; 4; 5]	1117557
A	Windguard Wheel Assy [Includes: 15; 18; 19; 2 of 17]	1115097
B	ShortStop™ Windguard Arm Assy [Includes; A; 12; 2 of 13, 14 & 16]	1115931
C	ShortStop™ Offset Windguard Arm Assy [Includes; A; 12; 2 of 13, 14 & 16]	1117517
D	Double Rear Bow Hdw [Includes: 2 of 1, 3, 4, 5, 8 & 9]	1116882
E	Windguard Shank Hdw [Includes: 3; 4; 5; 3 of 1]	1110398
	PARTS	
1	Self-Tapping Screw - 3/8" x 1"	1700400
2	ShortStop™ Rear Bow Stabilizer Bracket	1116880
3	Flat Washer - 5/16"	1700428
4	Lock Washer - 5/16"	1700433
5	Hex Head Cap Screw - 5/16" x 2"	1701420
6	Twist-Lok™ ShortStop™ Bow Shank	1703486
7	Bow Reinforcement Tube - 6-1/2"	1115490
8	Self-Drilling Screw - 1/4" x 3/4"	1700398
9	Cable Clamp	1701441
10	High-Lift Windguard - Sliding	1115475
11	High-Lift Windguard - Fixed	1115476
12	ShortStop™ Windguard Arm	1115928
	ShortStop™ Windguard Arm - Offset	1117515
13	Nylon Lock Nut - 3/8"	1701580
14	Flat Washer - 3/8" - SAE	1701176
15	Windguard Adjustment Plate	1115095
16	Hex Head Cap Screw - 3/8" x 1-1/4"	1702891
17	Flange Bearing - 1-1/8" OD x 1/2" Bore	1702627
18	Windguard Wheel	1703279
19	Button Head Cap Screw - 1/2 x 1-1/2"	1703444
20	Alum Side Mount Latchplate - 4'	1100749
	Alum Side Mount Latchplate - 6'	1700802
21	Windguard Anchor	1115367
22	Bow Stop	1109151
23	Bridge Plate	1108080
24	Self-Drilling Screw - #12 x 1"	1701471

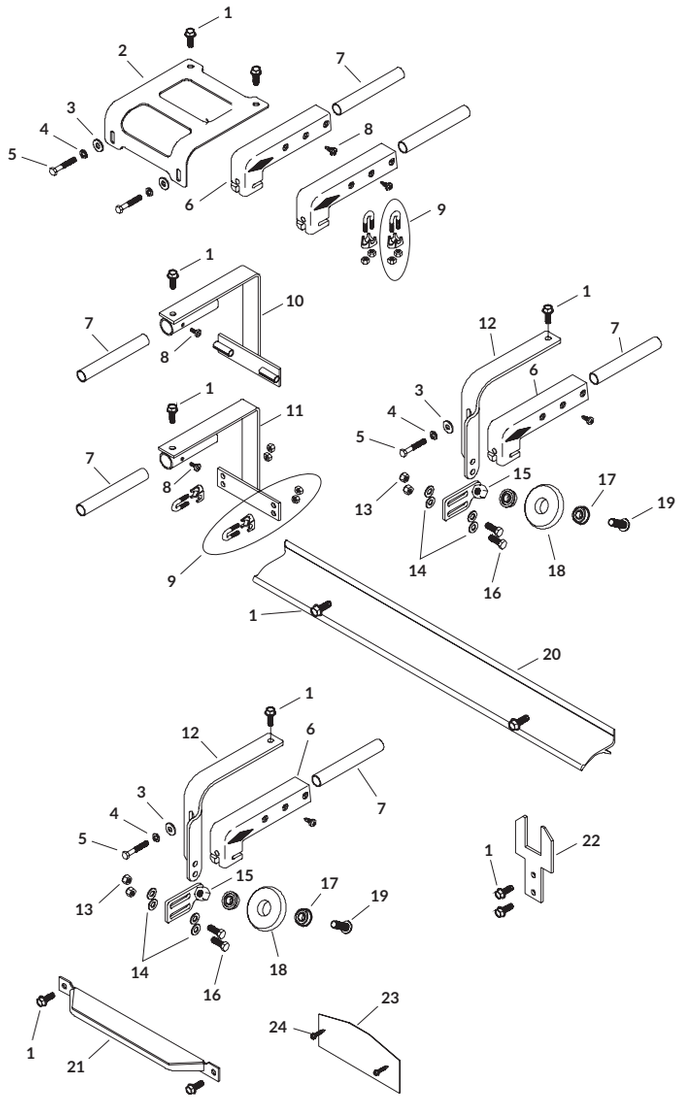

Table of Contents

Replacement Parts

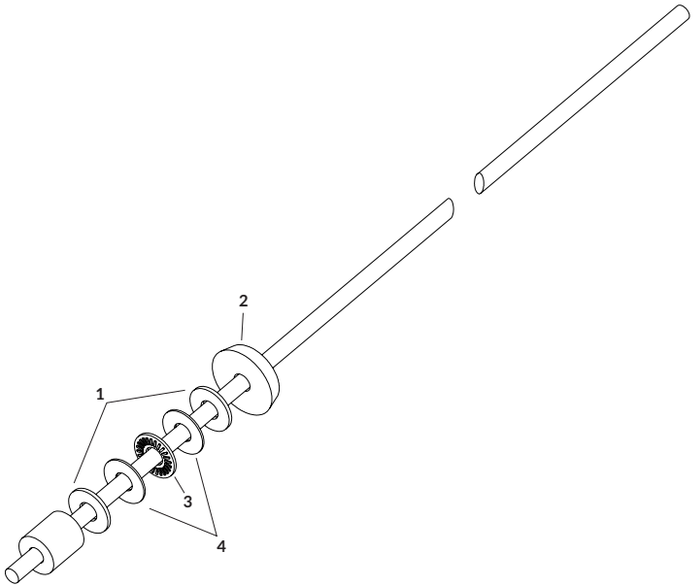

CABLE ASSEMBLIES

	DESCRIPTION	P/N
	KITS & HARDWARE	
	Galvanized Cable - 4 Bows - 29'4"	1108022
	Galvanized Cable - 5 Bows - 35'2"	1108023
	Galvanized Cable - 6 Bows - 41'	1108024
	Galvanized Cable - 7 Bows - 46'10"	1108025
	Galvanized Cable - 8 Bows - 52'8"	1108026
	Galvanized Cable - 9 Bows - 58'6"	1108027
	Galvanized Cable - 10 Bows - 64'4"	1108028
	Galvanized Cable - 11 Bows - 70'2"	1108029
	Galvanized Cable - 12 Bows - 76'	1108030
	Galvanized Cable - 13 Bows - 81'10"	1108031
	Galvanized Cable - 14 Bows - 87'8"	1108032
	Galvanized Cable - 15 Bows - 93'6"	1108033
	Galvanized Cable - 16 Bows - 99'4"	1108034
	Galvanized Cable - 17 Bows - 105'2"	1108035
	Stainless Cable - 4 Bows - 29'4"	1110442
	Stainless Cable - 5 Bows - 35'2"	1110443
	Stainless Cable - 6 Bows - 41'	1110444
	Stainless Cable - 7 Bows - 46'10"	1110445
	Stainless Cable - 8 Bows - 52'8"	1110446
	Stainless Cable - 9 Bows - 58'6"	1110447
	Stainless Cable - 10 Bows - 64'4"	1110448
	Stainless Cable - 11 Bows - 70'2"	1110449
	Stainless Cable - 12 Bows - 76'	1110450
	Stainless Cable - 13 Bows - 81'10"	1110451
	Stainless Cable - 14 Bows - 87'8"	1110452
	Stainless Cable - 15 Bows - 93'6"	1110453
	Stainless Cable - 16 Bows - 99'4"	1110454
	Stainless Cable - 17 Bows - 105'2"	1110455
A	Tension Scale Replacement Hdw [Includes: 2; 3; 2 of 1 & 4]	1114636
	PARTS	
1	Flat Washer - 1/4"	1700427
2	Outer Housing Washer	1107952
3	Thrust Bearing	1703277
4	Thrust Washer	1703278

NOTE: Cables include hardware; two (2) bows in rear bow stabilizer are counted as one (1).

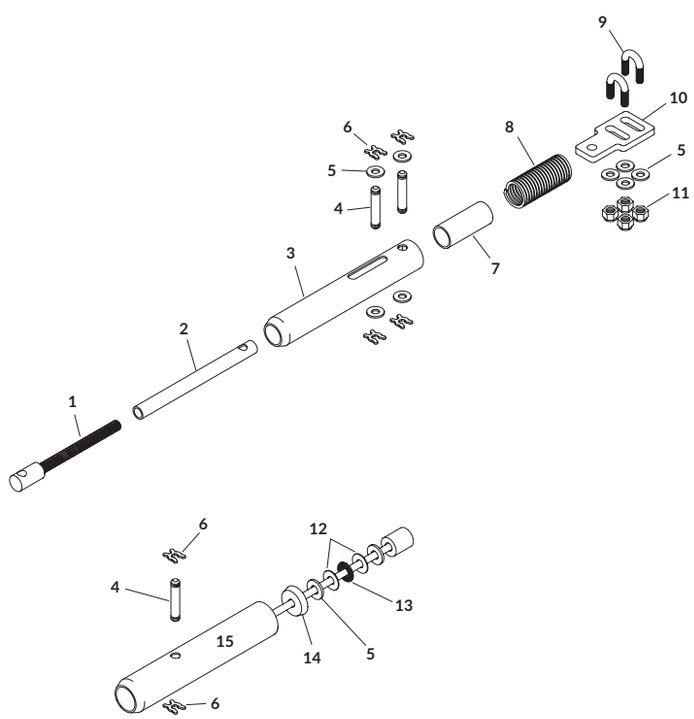

CABLE TENSION SCALES

	DESCRIPTION	P/N
	KITS & HARDWARE	
	Cable Tension Scale Kit [Includes: B; 1; 2; 3; 7; 8; 10; 15; 2 of 4; 4 of 5 & 6]	*1107990
A	Tension Scale Replacement Hdw [Includes: 12; 13; 14; 2 of 5]	1114636
B	Cable Tension Scale Hdw [Includes: 4; 2 of 6 & 9; 4 of 5 & 11]	1108001
	PARTS	
1	Scale Adjustment Rod	1107953
2	Scale Spring Guide	1107949
3	Scale Spring Housing	1107947
4	Headless Pin - 1.325"	1701442
5	Flat Washer - 1/4"	1700427
6	Crimp Ring Retainer - 5/16"	1701440
7	Spring Housing Stop	1107948
8	Die Spring - 3"	1701444
9	U-Bolt - 5/16"	1701470
10	Cable Scale End	1107956
11	Nylon Lock Hex Nut - 5/16"	1700419
12	Thrust Washer	1703278
13	Thrust Bearing	1703277
14	Outer Housing Washer	1107952
15	Tension Scale Outer Housing	1107951

*Hardware NOT included; cable purchased separately.

Table of Contents

Replacement Parts

CRANK ARMS

	DESCRIPTION	P/N
	KITS & HARDWARE	
	Crank Arm Kit - 83" [Includes: A; 6]	1107994
	Crank Arm Kit - 114" [Includes: A; 6]	1108063
A	Crank Arm Hdw [Includes: 1; 3; 5; 2 of 2]	1113341
	PARTS	
1	Econo U-Joint	1700527
2	Spring Pin - 1/4" x 1-1/2"	1700445
3	Slide Handle	1107984
4	Square Crank Extension - 33"	1107838
5	Spring Pin - 1/4" x 1-3/16"	1701118
6	Crank Arm w/o U-Joint - 83"	1107993
	Crank Arm w/o U-Joint - 114"	1111383
7	Operating Decal	1100362

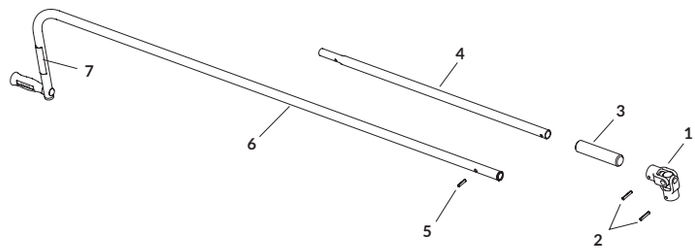

CRANK DRIVES

	DESCRIPTION	P/N
	KITS & HARDWARE	
	Manual Chain Drive Crank Kit [Includes: A; 1; 2; 6; 7; 8; 10; 12; 13; 15; 16; 17; 18; 20; 23; 24; 25; 26; 27; 28; 2 of 4, 5, 9 & 11]	1108960
	Sprocket Kit w/Bearing [Includes: 10; 12; 14; 15; 24; 2 of 11]	1110654
	Pulley Kit w/Bearings [Includes: 10; pulley; 14; 15; 24; 2 of 11]	1110646
A	Manual Crank Hdw [Includes: 3; 3 of 19, 21 & 22]	1108973
	PARTS	
1	Roller Chain Assy - 14'	1109179
2	Sprocket w/Hub - 36 Tooth	1701515
3	Soc Head Cap Screw - 5/16" x 1-1/2"	1701493
4	Hex Head Cap Screw - 5/16" x 3"	1702629
5	Lock Washer - 5/16"	1700433
6	Handle Stiffener	1108909
7	Crank Handle	1108929
8	Crank Guard	1110159
9	Guard Spacer	1108917
10	Hex Head Cap Screw - 1/2" x 2"	1701042
11	Flange Bearing - 1-1/8" OD x 1/2" Bore	1702627
12	Sprocket Spacer	1110648
13	Sprocket	1110640
14	Pulley Spacer	1110649
15	Flat Washer - 1/2"	1701269
16	Centerlock Hex Nut - 3/8"	1700418
17	Flat Washer - 3/8"	1700429
18	Crank Mtg Bracket	1108924
19	Self-Tapping Screw - 3/8" x 1"	1700400
20	Carriage Bolt - 3/8" x 4" - GR5	1702080
21	Hex Nut - 3/8"	1700407
22	Lock Washer - 3/8"	1700434
23	Crank Adjustable Bracket	1108925
24	Nylon Lock Hex Nut - 1/2"	1701145
25	Manual Locking Pin	1108918
26	Crank Cam Lobe	1108921
27	Locking Pin - 3/8 x 2-13/16"	1108919
28	Compression Spring - 1-1/4"	1702084

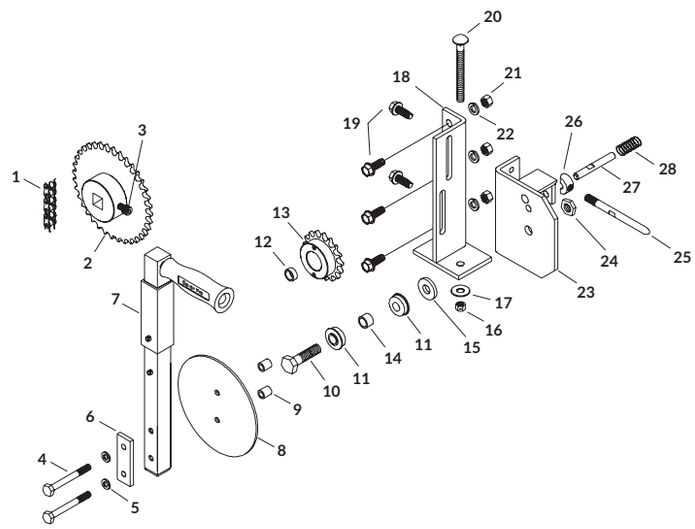

Table of Contents

Replacement Parts

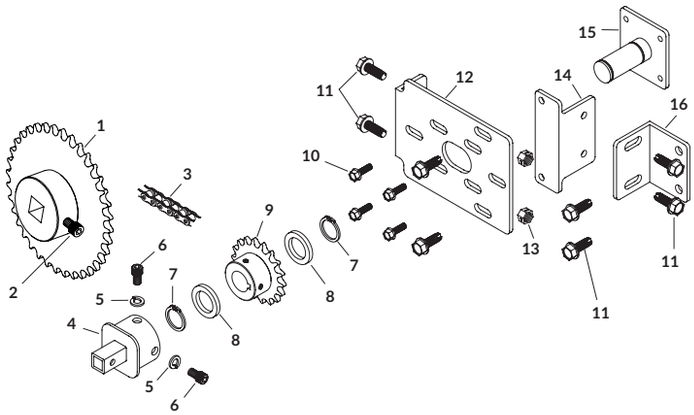

CRANK REDUCER

	DESCRIPTION	P/N
	KITS & HARDWARE	
	Crank Reducer Kit [Includes: A; 1; 4; 9; 12; 14; 15; 16; 2 of 5, 6, 7 & 8; 4 of 10 & 11]	1108119
A	Crank Reducer Hdw [Includes: 2; 3; 2 of 13; 4 of 11]	1108131
	PARTS	
1	Sprocket w/Hub - 36 Tooth	1701515
2	Soc Head Cap Screw - 5/16" x 1-1/2"	1701493
3	Roller Chain - 32"	1108132
4	Crank Reducer Collar	1108128
5	Lock Washer - 5/16"	1700433
6	Soc Head Cap Screw - 5/16" x 1/2"	1701407
7	External Retaining Ring - 1" Dia. x .042"	1701060
8	Spacer Washer	1106453
9	Sprocket w/Collar - 18 Tooth	1108130
10	Self-Tapping Screw - 5/16" x 1"	1701059
11	Self-Tapping Screw - 3/8" x 1"	1700400
12	Universal Motor Mount Plate	1108089
13	Centerlock Hex Nut - 3/8"	1700418
14	Crank Reducer Adjustment Plate	1108122
15	Crank Reducer Shaft Weldment	1108125
16	Crank Reducer Base Plate	1108121

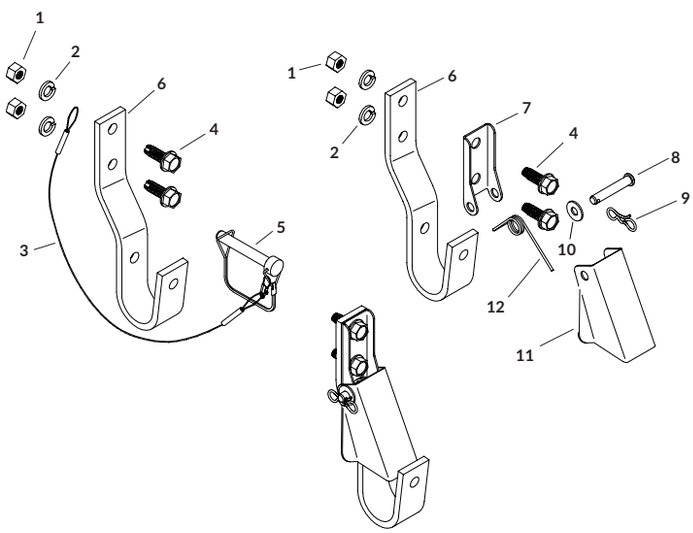

CRANK RETAINER

	DESCRIPTION	P/N
	KITS & HARDWARE	
	Offset Crank Retainer Kit [Includes: A; 6]	1101929
	Offset Pinless Crank Retainer Kit [Includes: B; 6]	1114603
A	Offset Crank Retainer Hdw [Includes: 3; 5; 2 of 1, 2 & 4]	1107062
B	Offset Pinless Retainer Conversion Kit [Includes: 7; 8; 9; 10; 11; 12; 2 of 1, 2 & 4]	1114602
	PARTS	
1	Hex Nut - 3/8"	1700407
2	Lock Washer - 3/8"	1700434
3	Cable w/#5 Interlock Snap	1100574
4	Self-Tapping Screw - 3/8" x 1"	1700400
5	Wire Lock Pin - 3/8" x 2-1/2"	1700526
6	Offset J-Hook Crank Retainer	1101930
7	Offset Pinless Crank Retainer Base Plate	1114599
8	Clevis Pin - 5/16" x 1-3/4"	1703133
9	Bowtie Cotter Pin - 1-3/8"	1704380
10	Flat Washer - 1/4"	1700427
11	Offset Pinless Crank Retainer Lock	1114600
12	Tension Spring	1703134

Table of Contents

Replacement Parts

FRONT COVERS - ADJUSTABLE DRIVE

	DESCRIPTION	P/N
	KITS & HARDWARE	
	Adjustable Drive Kit [Includes: A; C; 19]	1115144
	Adjustable Drive Kit - Narrow [Includes: B; C; 19]	1117551
	Front Cover Kit - 12" Rise [Includes: D; 1]	1115148
	Front Cover Kit - Flat [Includes: E; 2 of 16]	1115147
	Front Cover Kit - Flat - Narrow [Includes: E; 2 of 16]	1117555
	Front Cover Brace Kit - 12" Rise [Includes: 2 of 11 & 12; 4 of 14]	1115141
	Front Cover Brace Kit - Flat [Includes: 4 of 11 & 14]	1115142
A	Adjustable Drive Assy - 4 Bearing [Includes: 2; 3; 4; 5; 6; 2 of 7, 8 & 10; 4 of 9, 13 & 21]	1115222
B	Adjustable Drive Assy - 4 Bearing - Narrow [Includes: 2; 3; 4; 5; 6; 2 of 7, 8 & 10; 4 of 9, 13 & 21]	1117552
C	Cable Guard & Hdw [Includes: 2 of 1; 8 of 14; 10 of 20]	1115146
D	Front Cover Hdw - 12" Rise [Includes: 3 of 17 & 18; 13 of 14]	1115139
E	Front Cover Hdw - Flat [Inlcudes: 10 of 14, 17 & 18]	1115138
	PARTS	
1	Adjustable Drive Cable Guard	1107991
2	Drive Pulley	1705323
3	Drive Head Shaft w/o Keyway	1107974
	Drive Head Shaft w/o Keyway - Narrow	1117520
4	Head Shaft Coupling	1124941
5	Drive Head Shaft w/Keyway	1703348
6	Pulley	1701446
7	Spring Pin - 1/4" x 1-3/4"	1701360
8	Hex Head Cap Screw - 5/16" x 1-3/4"	1701468
9	Flat Washer - 5/16"	1700428
10	Nylon Lock Hex Nut - 5/16"	1700419
11	Adjustable Drive Bracket - Short	1115128
12	Adjustable Drive Bracket - Tall	1115129
13	Pillow Block Housing - 1"	1702595
14	Self-Tapping Screw - 3/8" x 1"	1700400
15	Front Cover Set - 12" Rise	1117679
16	Flat Front Cover - R	1115064
	Flat Front Cover - L	1115124
	Flat & Narrow Front Cover - R	1117549
17	Flat Washer - 3/8"	1700429
18	Hex Nut - 3/8"	1700407
19	Alum Flat Bar - 103"	1700581
20	Self-Drilling Screw - #12 x 1"	1701471
21	Radial Ball Bearing - 1.003" ID x 2-3/64" OD	1705450

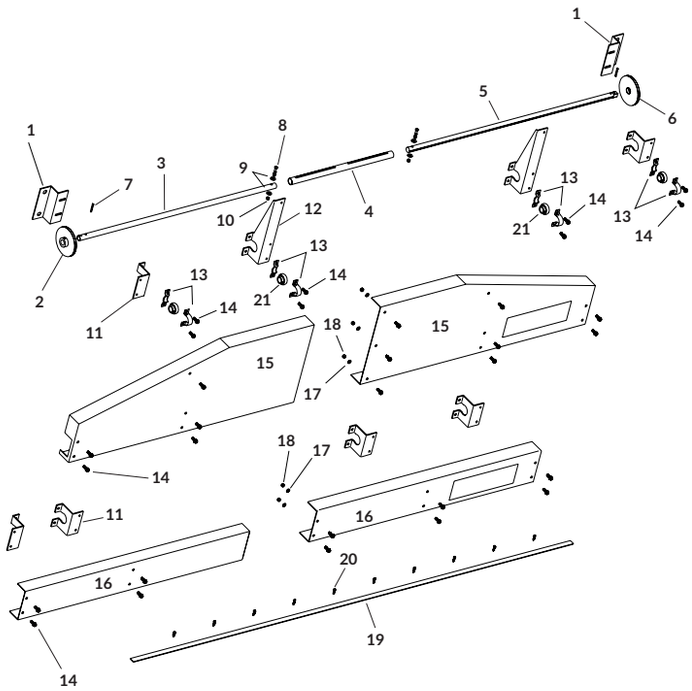

Table of Contents

Replacement Parts

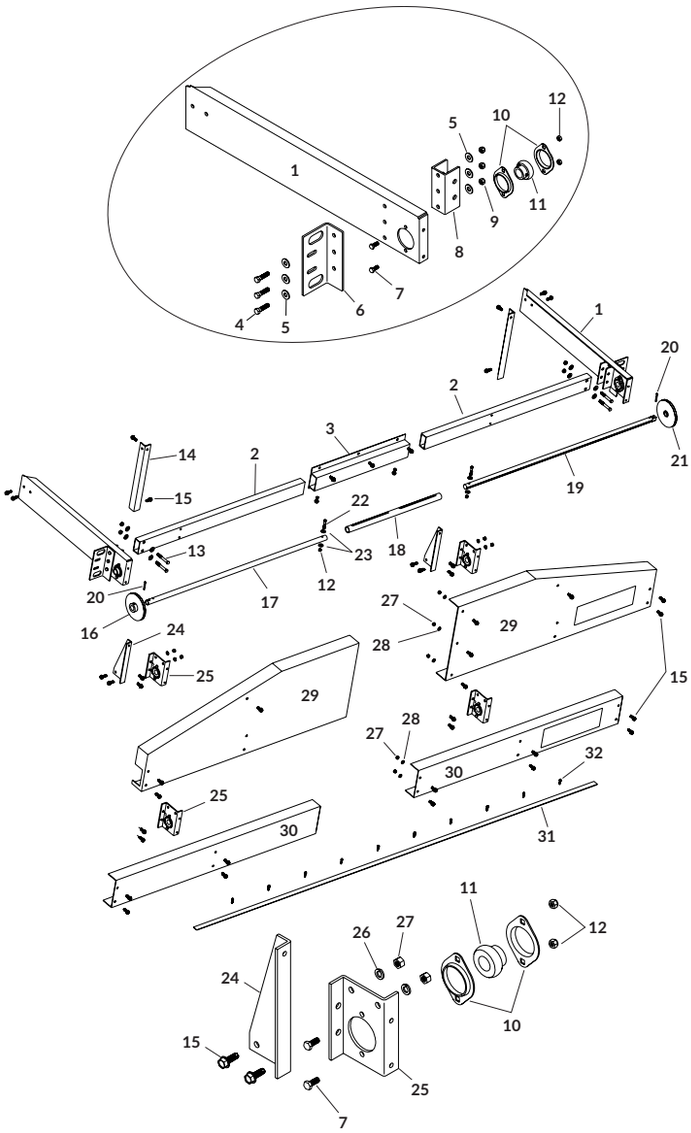

FRONT COVERS - UNIVERSAL LANDINGS

	DESCRIPTION	P/N
	KITS & HARDWARE	
	Universal Landing Kit [Includes: B; G; 3; 16; 17; 18; 19; 21; 24; 31; 2 of 1, 2, 6, 8, 11, 20 & 22; 4 of 7, 10, 13, 15 & 23; 6 of 4 & 12; 10 of 9; 20 of 5]	1115143
	Universal Landing Kit - Narrow [Includes: B; G; 3; 16; 17; 18; 19; 21; 24; 31; 2 of 1, 2, 6, 8, 11, 20 & 22; 4 of 7, 10, 13, 15 & 23; 6 of 4 & 12; 10 of 9; 20 of 5]	1117522
	Front Cover Kit - 12" Rise [Includes: E; 29]	1115148
	Front Cover Kit - Flat [Includes: F; 2 of 30]	1115147
	Front Cover Kit - Flat - Narrow [Includes: F; 2 of 30]	1117555
	Brace Kit - Belly Dump - Qty 2 [Includes: 2 of 14; 4 of 15]	1108055
A	Universal Landing - High Brace Assy [Includes: H; 2 of 24]	1115140
B	Universal Landing - Short Brace Assy [Includes: 11; 25; 2 of 7, 10 & 12]	1115132
C	Landing Arm Assy - L [Includes: 1; 6; 8; 11; 2 of 7, 10 & 12; 3 of 4 & 9; 6 of 5]	1115055
D	Landing Arm Assy - R [Includes: 1; 6; 8; 11; 2 of 7, 10 & 12; 3 of 4 & 9; 6 of 5]	1115056
E	Front Cover Hdw - 12" Rise [Includes: 3 of 27 & 28; 13 of 15]	1115139
F	Front Cover Hdw - Flat [Includes: 2 of 27 & 28; 10 of 15]	1115138
G	Universal Landing Hdw [Includes: 6 of 5 & 9; 10 of 32; 11 of 15]	1108037
H	Mounting Fasteners (4) [Includes: 4 of 15, 26 & 27]	1107711
	PARTS	
1	Landing Arm - R	1115049
	Landing Arm - L	1115048
2	Landing Cross Tube	1115050
	Landing Cross Tube - Narrow	1117519
3	Center Landing	1115065
4	Hex Head Cap Screw - 3/8" x 1-1/2"	1701434
5	Flat Washer - 3/8" - SAE	1701176
6	Front Cable Guard - L	1115053
	Front Cable Guard - R	1115054
7	Hex Head Cap Screw - 5/16" x 3/4"	1701045
8	Landing Cross Tube Channel	1115051
9	Nylon Lock Nut - 3/8"	1701580
10	Bearing Flange - 52MM - 2 Bolt	1701054
11	Radial Ball Bearing - 1.003" ID x 2-3/64" OD	1705450
12	Nylon Lock Hex Nut - 5/16"	1700419
13	Hex Head Cap Screw - 3/8" x 3"	1700371
14	Landing Brace	1108047
15	Self-Tapping Screw - 3/8" x 1"	1700400
16	Drive Pulley	1705323
17	Drive Head Shaft w/o Keyway	1107974
	Drive Head Shaft w/o Keyway - Narrow	1117520
18	Head Shaft Coupling	1124941
19	Drive Head Shaft w/Keyway	1703348
20	Spring Pin - 1/4" x 1-3/4"	1701360
21	Pulley	1701446
22	Hex Head Cap Screw - 5/16" x 1-3/4"	1701468
23	Flat Washer - 5/16"	1700428
24	Universal Landing - 12" Rise Brace	1115059
25	Universal Landing - Short Brace	1115057
26	Lock Washer - 3/8"	1700434
27	Hex Nut - 3/8"	1700407
28	Flat Washer - 3/8"	1700429
29	Front Cover Set - 12" Rise	1117679
30	Flat Front Cover - L	1115124
	Flat Front Cover - R	1115064
	Flat & Narrow Front Cover - R	1117549
31	Alum Flat Bar - 103"	1700581
32	Self-Drilling Screw - #12 x 1"	1701471

Table of Contents

Replacement Parts

GLIDE STRIPS

	DESCRIPTION	P/N
	KITS	
	UHMW Glide Strip Kit - 18'	1110967
	UHMW Glide Strip Kit - 24'	1110968
	UHMW Glide Strip Kit - 30'	1110969
	UHMW Glide Strip Kit - 40'	1110970
	UHMW Glide Strip Kit - 48'	1110981
	PARTS	
1	Wood Screw - 1"	1702111
2	Self-Tapping Screw - 1/4" x 3/4"	1702461

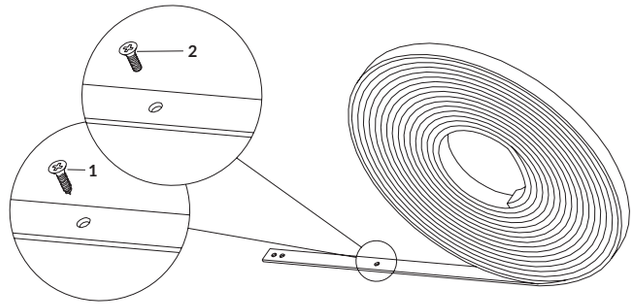

JACK SHAFTS

	DESCRIPTION	P/N
	KITS	
	Jack Shaft Kit [Includes: A; 4; 7; 14; 15; 16; 2 of 5, 8 & 11; 4 of 6, 9, 10, 12 & 13]	1110733
A	Jack Shaft Sprocket Hdw [Includes: 1; 2 of 2 & 3]	1110732
	PARTS	
1	Chain Connector Link	1701057
2	Self-Tapping Screw - 3/8" x 1"	1700400
3	Lock Washer - 3/8"	1700434
4	Jack Shaft Bracket	1110719
5	Hex Head Cap Screw - 3/8" x 1-1/2"	1701434
6	Flat Washer - 3/8"	1700429
7	Shaft Base Plate Bracket	1110720
8	Centerlock Hex Nut - 3/8"	1700418
9	Carriage Bolt - 5/16" x 1" - GR2	1701522
10	Bearing Flange - 52MM - 2 Bolt	1701054
11	Radial Ball Bearing - 1.003" ID x 2-3/64" OD	1705450
12	**Lock Washer - 5/16"**	1700433
13	Hex Nut - 5/16"	1700411
14	Sprocket w/Hub - 27 Tooth	1110724
15	Sprocket w/Shaft	1110721
16	Square Key - 1/4" x 1/4" x 2-1/4"	1701588

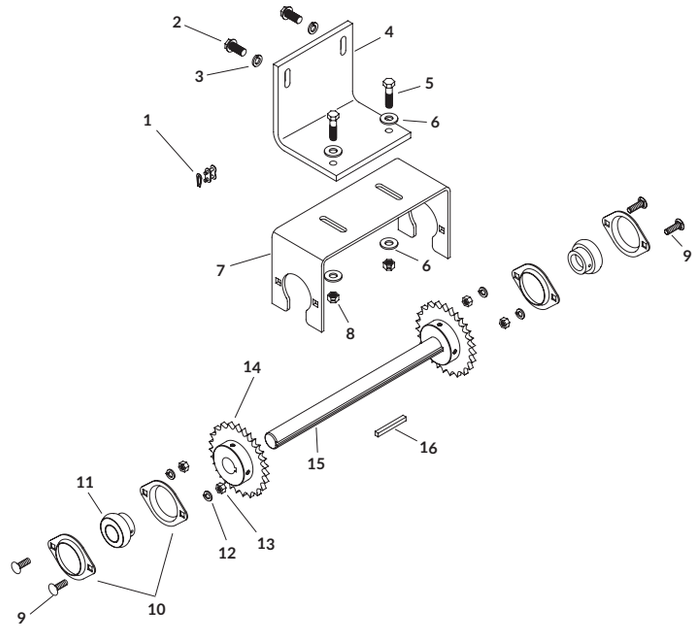

REAR PULLEYS

	DESCRIPTION	P/N
	KITS & HARDWARE	
	Rear Pulley Kit (1) [Includes: A; 2; 3; 4; 5; 6; 7]	1110384
	Extended Rear Pulley Kit (1) [Includes: A; 2; 3; 4; 5; 6; 9]	1110709
A	Rear Pulley Hdw [Includes: 5; 5 of 8]	1110385
B	Mounting Fasteners (4)	1107711
	PARTS	
1	Nylon Lock Hex Nut - 1/2"	1701145
2	Rear Pulley Guard	1107971
3	Hex Jam Nut - 1/2"	1700413
4	Flat Washer - 7/16"	1700430
5	Pulley - 5-5/8"	1701445
6	Hex Head Cap Screw - 1/2" x 2"	1701042
7	Rear Pulley Mtg Bracket	1107957
8	Self-Tapping Screw - 3/8" x 1"	1700400
9	Extended Rear Pulley Bracket	1109000
10	Rear Pulley Spacer - 3/16"	1109500
	Rear Pulley Spacer - 1/2"	1129407

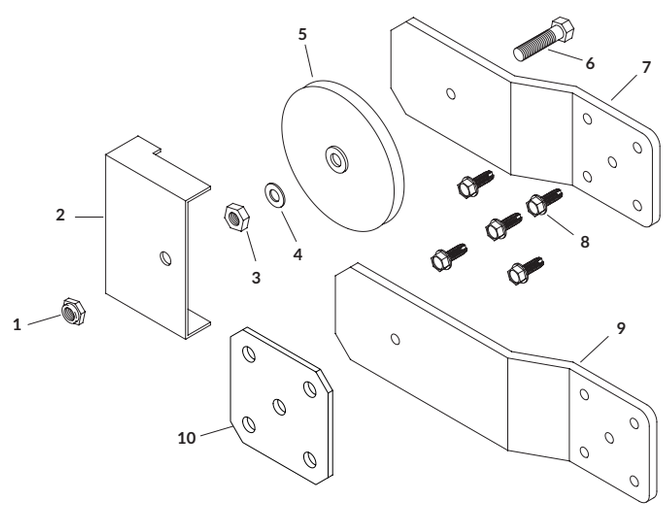

REAR PULLEYS - ADJUSTABLE

	DESCRIPTION	P/N
	KITS & HARDWARE	
	Adjustable Rear Pulley Kit (1) [Includes: A; 1; 2; 3; 4; 5; 6; 7; 8; 9; 10; 2 of 5]	1126377
A	Mounting Fasteners (4)	1107711
	PARTS	
1	Nylon Lock Hex Nut - 1/2"	1701145
2	Adjustable Rear Pulley Guard	1117242
3	Hex Jam Nut - 1/2"	1700413
4	Pulley - 5-5/8"	1701445
5	Flat Washer - 7/16"	1700430
6	Rear Pulley Take-Up	1117245
7	Hex Nut - 5/8"	1700410
8	Flat Washer - 5/8"	1201342
9	Adjustable Rear Pulley Bracket - Side Mount	1125911
10	Hex Head Cap Screw - 1/2" x 2-1/2"	1704041

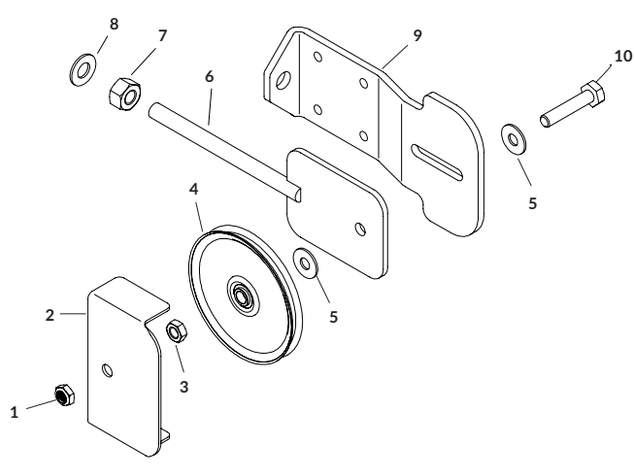

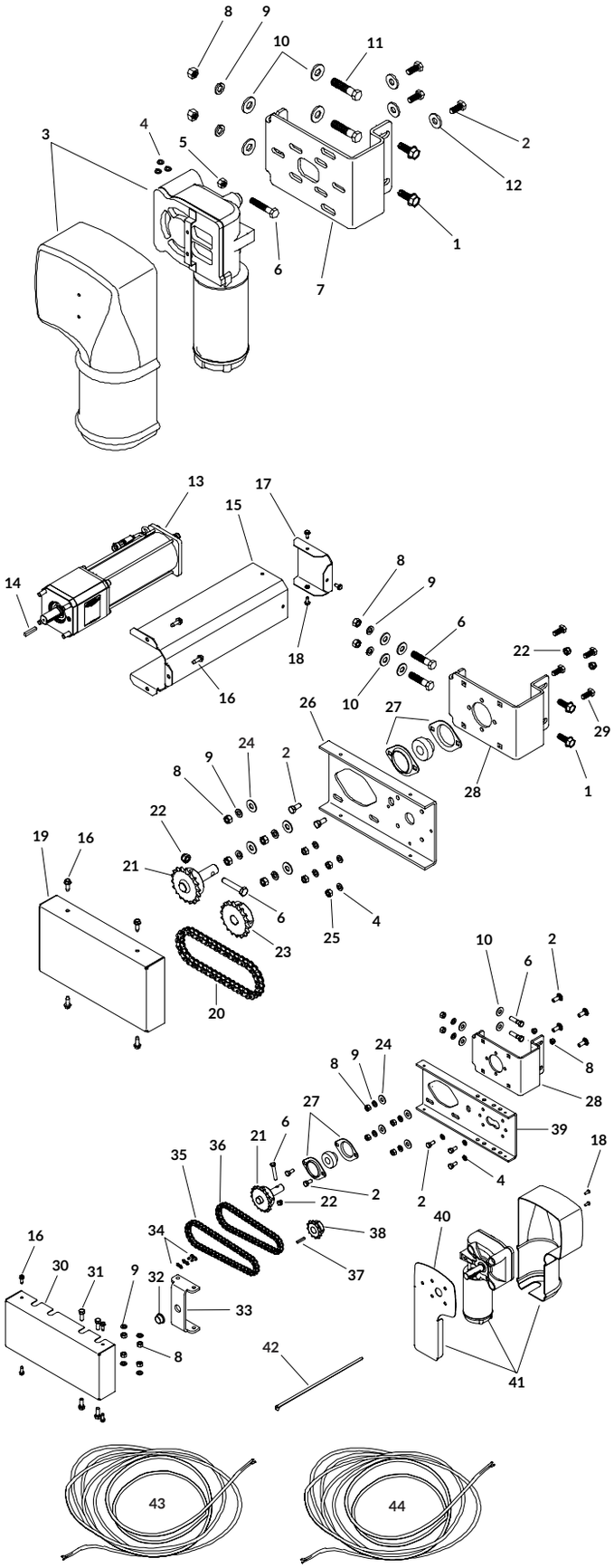

	DESCRIPTION	P/N
37	Square Key - 3/16" x 3/16" x 1-1/8"	1125699
38	Sprocket - T12-40 - 3/4" Bore	1125684
39	Adjustable Mtg Bracket	1125686
40	Motor Cover Plate - Backside	1125689
41	Durabuilt™ Motor w/Cover - 2-3/8" Shaft - 3/16" Keyway w/Cover	1125700
42	Cable Tie - 8"	1703231
43	Dual-Cond Wire - 6 Ga. - 50'	1110312
	Dual-Cond Wire - 6 Ga. - 75'	1108102
	Dual-Cond Wire - 6 Ga. - 100'	1108101
44	Electrical Wire - 3 Strand 14 Ga. - 15'	1116482

ELECTRIC DRIVE OPTIONS

	DESCRIPTION	P/N
	KITS & HARDWARE	
	Durabuilt™ Electric Drive Kit - Side Mt - 50' [Includes: D; E; F; H; 3; 7; 43; 44; 30 of 42]	1111526
	Durabuilt™ Electric Drive Kit - Side Mt - 75' [Includes: D; E; F; H; 3; 7; 43; 44; 30 of 42]	1110340
	Durabuilt™ Electric Chain Drive Kit - Side Mt - 50' [Includes: B; D; F; 21; 27; 28; 30; 33; 35; 36; 38; 39; 40; 41; 43; 44; 15 of 42]	1125691
	Durabuilt™ Electric Chain Drive Kit - Side Mt - 75' [Includes: B; D; F; 21; 27; 28; 30; 33; 35; 36; 38; 39; 40; 41; 43; 44; 15 of 42]	1125692
	Durabuilt™ Electric Chain Drive Kit - Side Mt - 100' [Includes: B; D; F; 21; 27; 28; 30; 33; 35; 36; 38; 39; 40; 41; 43; 44; 15 of 42]	1125693
	HD Electric Chain Drive Kit - Side Mt - 50' [Includes: A; G; H; 13; 43; 44]	1122856
	HD Electric Chain Drive Kit - Side Mt - 75' [Includes: A; G; H; 13; 43; 44]	1122857
	HD Electric Chain Drive Kit - Side Mt - 100' [Includes: A; G; H; 13; 43; 44]	1122858
	HD Electric Motor Conversion Kit [Includes: A; 13]	1122948
A	HD Side Mount Hdw Kit [Includes: C; 17; 19; 20; 21; 23; 26; 27; 28; 35; 15 of 42]	1122387
B	Side Mount Assy Hdw - Durabuilt™ [Includes: 6; 32; 37; 2 of 11; 3 of 4 & 22; 4 of 16, 29 & 31; 5 of 2; 8 of 24; 10 of 8 & 12]	1125711
C	Side Mount Assy Hdw - HD [Includes: 6; 14; 2 of 2 & 11; 3 of 18 & 22; 4 of 4, 25 & 29; 6 of 8 & 9; 7 of 16; 8 of 24]	1122386
D	Electric Motor Hdw [Includes: 3 of 2, 4 & 12]	1118549
E	Electric Motor Mtg Hdw [Includes: 5; 6; 2 of 8, 9 & 11; 4 of 10; 6 of 12]	1108098
F	Elec Parts Kit w/Rocker - 50 Amp Modified	1116271
G	Electrical Parts Kit w/Rocker Switch - 80 Amp SMART Circuit Breaker	1128925
H	Dual-Connector Kit - Vert Pin - L Brkt	1109016
	PARTS	
1	Self-Tapping Screw - 3/8" x 1"	1700400
2	Hex Head Cap Screw - 5/16" x 3/4"	1701045
3	Durabuilt™ Motor w/Cover - 2-1/8" Shaft	1121307
4	Lock Washer - 5/16"	1700433
5	Top Lock Hex Nut - 5/16"	1702492
6	Hex Head Cap Screw - 5/16" x 2"	1701420
7	Side Mount Motor Mount Plate	1117518
8	Hex Nut - 3/8"	1700407
9	Lock Washer - 3/8"	1700434
10	Flat Washer - 3/8" - SAE	1701176
11	Hex Head Cap Screw - 3/8" x 1-1/2"	1701434
12	Flat Washer - 5/16"	1700428
13	HD Electric Motor	1122442
14	Square Key - 3/16" x 3/16" x 1-1/4"	1120762
15	HD Motor Cover	1122383
16	Self-Tapping Screw - 1/4" x 3/4"	1700403
17	HD Motor Cover Cap	1122384
18	Flange Cap Screw - #10-24 x 1/2"	1704308
19	Chain Drive Cover	1122382
20	Roller Chain Assy - 20-1/2"	1122385
21	Chain Drive Adapter Shaft	1122379
22	Nylon Lock Hex Nut - 5/16"	1700419
23	Sprocket - T18-40 - 3/4" Bore	1122377
24	Flat Washer - 3/8"	1700429
25	Hex Nut - 5/16"	1700411
26	Adjustable Mtg Bracket	1122381
27	Radial Ball Bearing w/Flanges	1703374
28	Chain Drive Bracket	1122380
29	Carriage Bolt - 3/8" x 1" - GR5	1705051
30	Chain Drive Cover	1125688
31	Hex Head Cap Screw - 3/8" x 1"	1701061
32	Flange Bearing - 3/4"	1704811
33	Motor Shaft Support Bracket	1125687
34	Chain Connector Link	1701057
35	Roller Chain Assy - 21-1/2"	1115383
36	Roller Chain Assy - 23-3/4"	1122562

ARM ASSEMBLIES - ALUMINUM

	DESCRIPTION	P/N
	KITS & HARDWARE	
	Alum Return Arm Kit - 10' w/2' Bend [Includes: A; 1; 3; 2 of 2 & 4]	1120258
	Alum Return Arm Kit - 12' w/2' Bend [Includes: A; 1; 3; 2 of 2 & 4]	1120259
	Alum Return Arm Kit - 14' w/2' Bend [Includes: A; 1; 3; 2 of 2 & 4]	1120260
	Alum Return Arm Kit - 20' w/7' Bend [Includes: A; 1; 3; 2 of 2 & 4]	1123007
	Alum Return Arm Kit - 16' [Includes: A; 1; 3; 2 of 2 & 4]	1120261
	Alum Return Arm Kit - 18' [Includes: A; 1; 3; 2 of 2 & 4]	1120262
	Alum Return Arm Kit - 20' [Includes: A; 1; 3; 2 of 2 & 4]	1120263
	Arm-Matic™ Arm/4-Spring Kit - 10' Arms w/2' Bend [Includes: A; 1; 3; 2 of 2 & 4]	1125316
	Arm-Matic™ Arm/4-Spring Kit - 12' Arms w/2' Bend [Includes: A; 1; 3; 2 of 2 & 4]	*1125317
	Arm-Matic™ Arm/UB Spring Kit - 12' Arms w/2' Bend [Includes: A; 1; 3; 2 of 2 & 4]	**1125318
	Tarp Tube Crossover Kit [Includes: 1; 3; & Hdw]	1125416
A	Tarp Tube & Arm Hdw	1119332
	PARTS	
1	Tarp Tube Crossover	1118951
2	Alum Return Arm - 10' w/2' Bend	1704465
	Alum Return Arm - 12' w/2' Bend	1704466
	Alum Return Arm - 14' w/2' Bend	1704467
	Alum Return Arm - 20' w/7' Bend	1808550
	Alum Return Arm - 10'	1121531
	Alum Return Arm - 16'	1704486
	Alum Return Arm - 18'	1704487
	Alum Return Arm - 20'	1704488
3	Tarp Tube Elbow	1118952
4	Rubber Bumper - 3-1/4" x 4-1/2"	1704458

*Includes 4-spring pivot kit P/N 1119441.
**Includes under body spring kit P/N 1118956

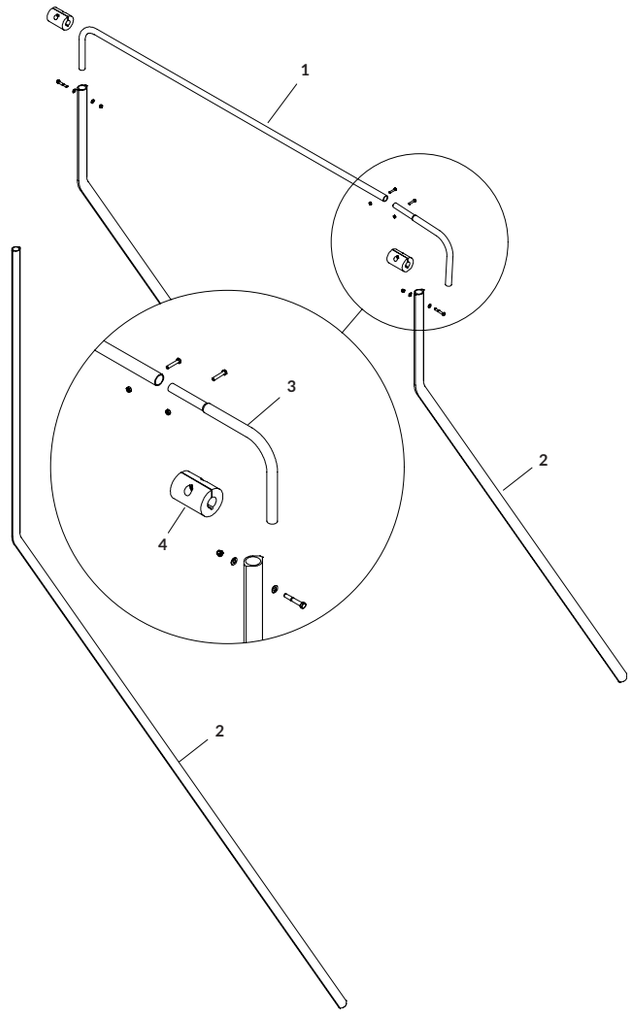

FRONT DRIVES - ALUMINUM HOUSING

	DESCRIPTION	P/N
	KITS & HARDWARE	
	Alum Electric Tarp Housing - 98" [Includes: A; 1; 3; 5]	1119082
	Alum Electric Tarp Housing - 104" [Includes: A; 1; 3; 5]	1119088
	Alum Manual Tarp Housing - 98" [Includes: A; 1; 3; 7]	1120371
	Alum Manual Tarp Housing - 104" [Includes: A; 1; 3; 7]	1120372
A	Tarp Spool Hdw [Includes: 3; 4; & Hdw]	1119079
	PARTS	
1	Alum Tarp Housing - 98"	1119083
	Alum Tarp Housing - 104"	1119089
2	Tarp Axle Stub Shaft	1114940
3	Threaded Tarp Axle - 97"	1115614
	Threaded Tarp Axle - 103"	1119086
4	Radial Ball Bearing w/Flanges	1703374
5	Direct-Drive Motor - 900 Watt - 12V	1704878
6	Tarp Housing Support Bracket	*1119092
7	Sprocket - L	**1117093

*Tarp housing support bracket is optional; must be ordered separately.
**Sprocket is used with housing/support brackets option only.

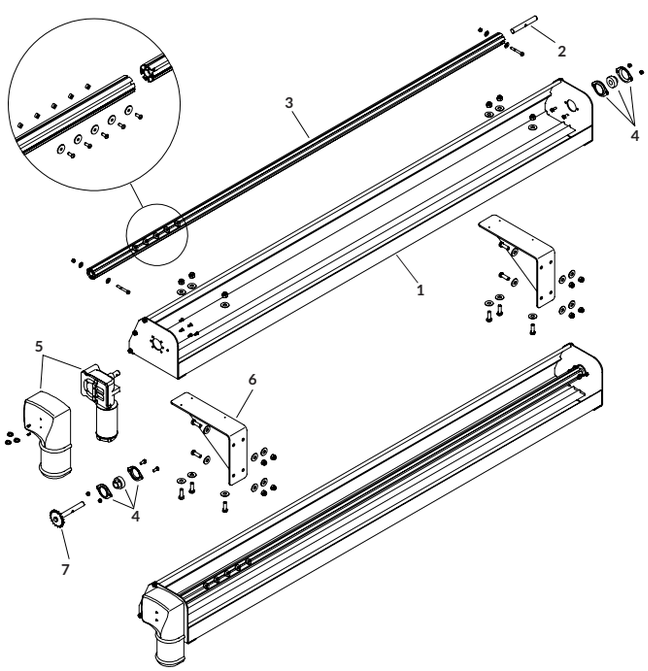

Table of Contents

Replacement Parts

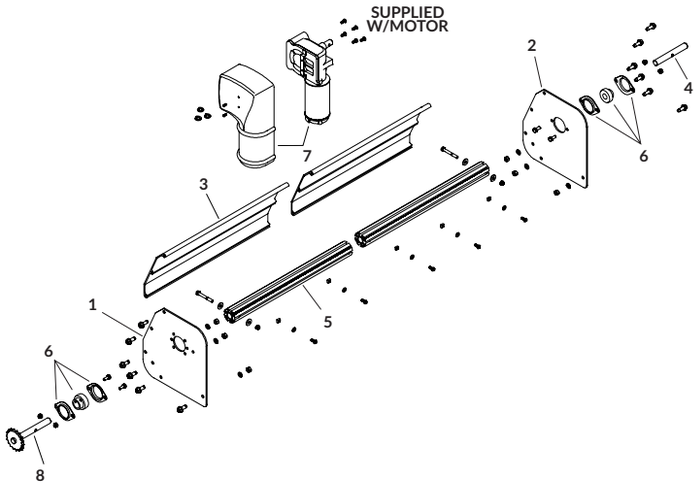

FRONT DRIVES - ALUM SIDE PLATES | WINDSHIELD

	DESCRIPTION	P/N
	KITS & HARDWARE	
	Front Drive w/Side Plates/Windshield Kit - 98" [Includes: A; 1; 2; 3; 5; 7]	1120265
	Front Drive w/Side Plates/Windshield Kit - 104" [Includes: A; 1; 2; 3; 5; 7]	1120266
	Windshield w/Side Plates Kit - 98" [Includes: 1; 2; 3; & Hdw]	1120267
	Windshield w/Side Plates Kit - 104" [Includes: 1; 2; 3; & Hdw]	1120268
A	Tarp Spool Hdw [Includes: 4; 6; & Hdw]	1119079
	PARTS	
1	Tarp Axle Side Plate - L	1119080
2	Tarp Axle Side Plate - R	1119081
3	Alum Windshield - 98"	1704484
	Alum Windshield - 104"	1704485
4	Tarp Axle Stub Shaft	1114940
5	Threaded Tarp Axle w/Hole	1114961
6	Radial Ball Bearing w/Flanges	1703374
7	Direct-Drive Motor - 900 Watt - 12V	1704878
8	Sprocket - L	*1120376

*Sprocket is used with the side plates & windshield.

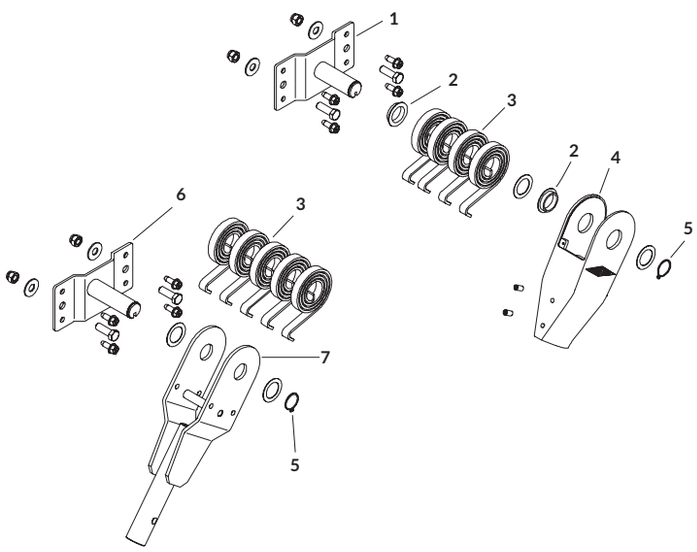

SPRING ASSEMBLIES - EXTERNAL PIVOT

	DESCRIPTION	P/N
	KITS & HARDWARE	
	4-Spring Pivot Kit [Includes: A; B; E]	1119441
	5-Spring Pivot Kit [Includes: C; D; E]	1119442
A	4-Spring Pivot Assy - L [Includes: 1; 4; 4 of 3; & Hdw]	1119096
B	4-Spring Pivot Assy - R [Includes: 1; 4; 4 of 3; & Hdw]	1119097
C	5-Spring Pivot Assy - L [Includes: 6; 7; 5 of 4; & Hdw]	1119105
D	5-Spring Pivot Assy - R [Includes: 6; 7; 5 of 4; & Hdw]	1119106
E	Spring Pivot Hdw	1118948
	PARTS	
1	4-Spring Pivot Bracket	1119098
2	Flange Bushing - 1.281" ID x 1.522" OD	1704468
3	Spiral Torsion Spring	1111027
4	4-Spring Pivot Connector	1704474
5	Retaining Ring - 1-1/4"	1702888
6	Pivot Bracket - Sloped - Gate Flex™	1116994
7	5-Spring Pivot Connector	1118950

NOTE: (4) Springs are used for systems up to 18', (5) Springs are used for systems up to 24'.

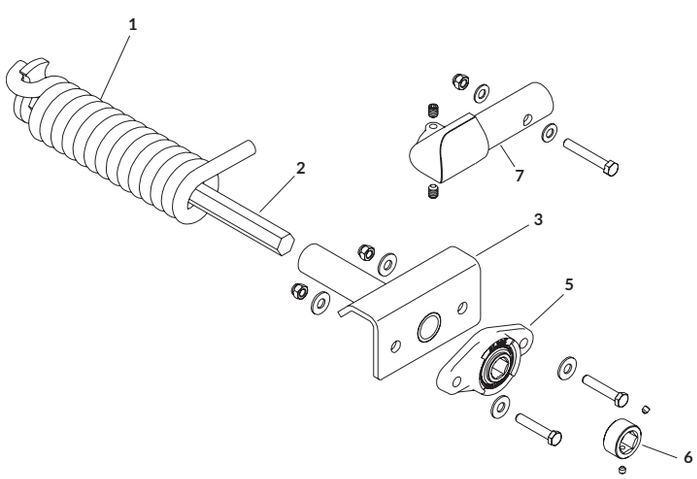

SPRING ASSEMBLIES - UNDER BODY HEX SHAFT

	DESCRIPTION	P/N
	KITS	
	Under body Hex Shaft Spring Kit [Includes: A; B; 2 of 7]	1118956
A	Under body Hex Shaft Spring Kit - L [Includes: 1; 2; 3; 5; 6; & Hdw]	1119566
B	Under body Hex Shaft Spring Kit - R [Includes: 1; 2; 3; 5; 6; & Hdw]	1119567
C	UB Hex Shaft Spring Kit w/Drop Plate - L [Includes: 1; 2; 3; 4; 5; 6; & Hdw]	1120227
D	UB Hex Shaft Spring Kit w/Drop Plate - R [Includes: 1; 2; 3; 4; 5; 6; & Hdw]	1120228
	PARTS	
1	Torsion Spring 15-Coil - L	1704476
	Torsion Spring 15-Coil - R	1704477
2	Spring Shaft - 14.88"	1704480
3	Spring Retainer Weldment	1118955
4	Drop Plate	*1119107
5	Flange Bearing - 7/8" Hex	1704456
6	Locking Collar - 7/8"	1704489
7	Spring Pivot Connector w/Set Screw	1119112

*These items are NOT shown in the drawing.
NOTE: Use for systems up to 29'.

SPRING ASSEMBLIES - UNDER RAIL HEX ROUND SHAFT

	DESCRIPTION	P/N
	KITS	
	Under rail Spring Kit - Hex/Round Shaft - L [Includes: 2; 3; 4; 5; 6; 7; & Hdw]	1120231
	Under rail Spring Kit - Hex/Round Shaft - R [Includes: 2; 3; 4; 5; 6; 7; & Hdw]	1120232
	PARTS	
1	Steel Bearing Support Channel	1119564
	Alum Bearing Support Channel	1119565
2	Pillow Block Bearing - 1"	1119559
3	Torsion Spring 15-Coil - L	1704476
	Torsion Spring 15-Coil - R	1704477
4	Spring Shaft - 1" OD x 19"	1704472
5	Spring Retainer Bracket	1119329
6	Spring Hanger Plate	1119110
7	Flange Bearing - 1" OD - 2 Bolt	1119560
8	Spring Pivot Connector w/Set Screw	1119112

NOTE: Use for systems up to 37'.

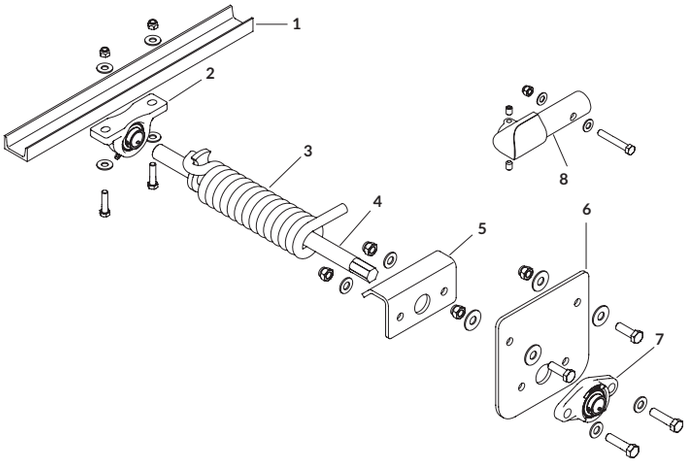

Table of Contents

Replacement Parts

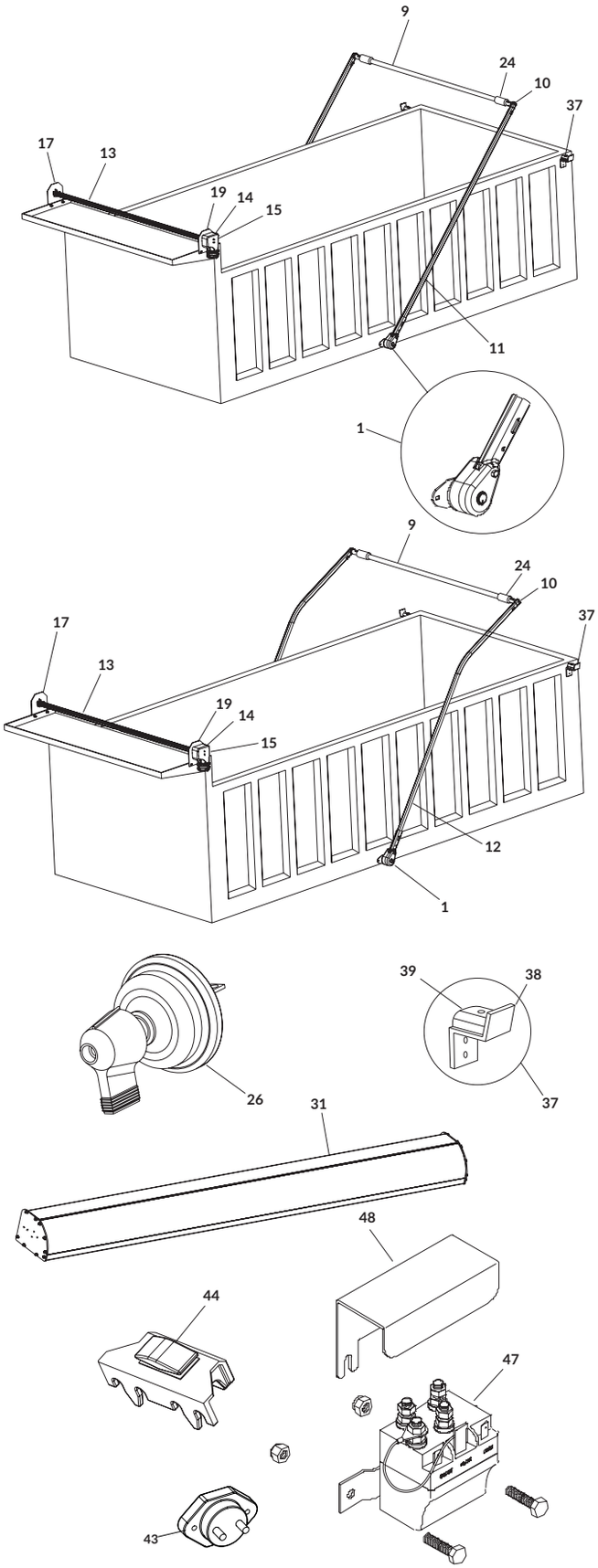

ARM ASSEMBLIES - SIDE MOUNT

	DESCRIPTION	P/N
	KITS	
	Flash™ Arm/5-Spring Kit w/Straight Arms	1801075
	Flash™ Arm/5-Spring Kit w/3' Bend	1801076
	PARTS	
1	Clamshell Pivot Spring Kit [Includes: 2 of 2, 3, 4, 6, 7 & 8; 10 of 5]	1809708
2	Clamshell Front Housing	*1800769
3	Clamshell Back Housing	*1800934
4	Pivot Spring Assy w/Base - Adjustable 5-Spring [Includes: 2 of 4, 6, 7 & 8; 10 of 5]	*1809825
5	Spiral Torsion Spring	*1800763
6	Shim - 1-1/4" ID x .047	*1800977
7	Retaining Ring - 1-1/4"	*1800978
8	Pivot Mount Hdw	*1801407
9	Rear Cross Piece	*1800300
10	Cast Elbow - 90°	1800597
11	Alum Return Arm - 150"	1800421
12	Upper Arm 30°	*1800504
13	Tarp Spool Axle - 3-Way Attachment -98"	1809330
14	Direct-Drive Motor - 600 Watt - 12V	1802061
15	Motor Cover - Chrome - 1 PC.	1801585
16	Dual-Cond Wire - 8 Ga. - 60'	*1800028
17	Bearing Plate Assy [Includes: 18; 19]	*1802007
18	Bearing - 3/4"	*1800042
19	Universal Bearing Plate	1802000
20	Shaft Extension - 3/4" x 4"	*1800980
21	Head Assy Hdw Bag	*1801568
22	Shaft Collar - 1-1/4"	*1800861
23	Shaft Collar - 3/4"	*1800089
24	Rubber Bumper Assy - 6"	1808819
25	Rotary Switch Kit [Includes: 26; 28; 29; 2 of 30; 8 of 27]	*1802076
26	Heavy-Duty Rotary Switch	1110551
27	Ring Terminal - 8 Ga. x 1/4" Stud	*1800430
28	Rotary Switch Bracket	*1800516
29	Circuit Breaker - 40 Amp	*1800536
30	Ring Terminal - 8 Ga. x 3/8" Stud - Battery	*1801486
	OPTIONS	
31	Housing Shell - 96" [Includes: 32; 2 of 33 & 34; 6 of 35]	1801062
	Housing Shell - 102" [Includes: 32; 2 of 33 & 34; 6 of 35]	1801055
32	Housing Deflector - 105-3/4"	*1800477
33	Housing Top Plate - 102"	*1800505
34	Housing End Plate	*1800571
35	Selt-Threading Bolt - 5/16" x 1-1/4"	*1800460
36	Alum Wind Deflector - 1 PC. (Flash™)	*1801919
37	Alum Arm Rest Kit [Includes: 40; 2 of 38 & 39]	1801999
38	Pivot Arm Rest	1801324
39	Rubber Bumper - Drilled - 4"	1801012
40	Pivot Arm Rest Hdw Bag	*1801408
41	Durabuilt™ Solenoid Kit 12V - 8 Ga.	*1809047
42	Durabuilt™ Cable Assy	*1809061
43	Circuit Breaker - 40 Amp - Marine Grade	*1800575
44	Rocker Switch	1800602
45	Ring Terminal - 6 Ga. x 3/8" Stud - Battery	*1800927
46	Ring Terminal - 6 Ga. x 1/4" Stud	*1800658
47	Motor-Rev Solenoid 12V - 2 Pt Mnt - Black Wire	1703845
48	Solenoid Cover	1703896
49	Alum Roller Bar w/Shaft [Includes: 13; 20]	*1800737

*These items are NOT shown in the drawing.

Table of Contents

Replacement Parts

ARM ASSEMBLIES - UNDER BODY

	DESCRIPTION	P/N
	PARTS	
1	Under body Spring Assy - 22 Coil - L [Includes: 5; 6; 8; 9; 10; 11; 12; 2 of 24 & 25]	1800963
2	Under body Spring Assy - 22 Coil - R [Includes: 5; 6; 8; 9; 10; 11; 12; 2 of 24 & 25]	*1800965
3	Under body Spring Sub-Assy - 22 Coil - L [Includes: 8; 9; 10; 11; 12; 2 of 23 & 24]	*1808485
4	Under body Spring Sub-Assy - 22 Coil - R [Includes: 8; 9; 10; 11; 12; 2 of 24 & 25]	*1808486
5	Universal Mtg Plate - Under body	1800960
6	Spring Spacer Plate - Under body	1801049
7	Spring Pivot Connector	*1801636
8	Torsion Spring 22-Coil - L	1800279
	Torsion Spring 22-Coil - R	1800280
9	Retention Plate Weldment	1800962
10	Spring Lever - Under body	1800967
11	Hex Bearing - 7/8" ID	1801243
12	Spring Hex Shaft - 22-1/2"	1810388
13	Pivot Mount Hdw	*1801407
14	Rear Cross Piece	1800300
15	Cast Elbow - 90°	1800597
16	Alum Return Arm - 150"	1800421
17	Upper Arm 30°	1800504
18	Tarp Spool Axle - 3-Way Attachment -98"	1809330
19	Direct-Drive Motor - 600 Watt - 12V	1802061
20	Motor Cover - Chrome - 1 PC.	1801585
21	Dual-Cond Wire - 8 Ga. - 60'	*1800028
22	Bearing Plate Assy [Includes: 23; 27; 2 of 24, 25 & 26]	*1802007
23	Bearing - 3/4"	*1800042
24	Hex Head Cap Screw - 3/8" x 1"	1800795
25	Lock Nut - 3/8"	1800993
26	Flat Washer - 3/8"	*1800994
27	Universal Bearing Plate	1802000
28	Shaft Extension - 3/4" x 4"	*1800980
29	Hex Head Cap Screw - 5/16" x 2-1/2"	*1800971
30	Lock Nut - 5/16"	*1800990
31	Head Assy Hdw Bag	*1801568
32	Shaft Collar - 1-1/4"	*1800861
33	Shaft Collar - 3/4"	*1800089
34	Rubber Bumper Assy - 6"	1808819
35	Hex Head Cap Screw - 1/4" x 3-1/4"	*1800572
36	Hex Lock Nut - 1/4"	*1800699
37	Flat Washer - 1/4"	*1800784
38	Rotary Switch Kit [Includes: 39; 41; 42; 2 of 36, 37, 43, 44 & 45; 8 of 40]	*1802076
39	Heavy-Duty Rotary Switch	1110551
40	Ring Terminal - 8 Ga. x 1/4" Stud	*1800430
41	Rotary Switch Bracket	*1800516
42	Circuit Breaker - 40 Amp	*1800536
43	Hex Head Cap Screw - 1/4" x 5/8"	*1800771
44	Sheet Metal Screw - #10 x 1"	*1800802
45	Ring Terminal - 8 Ga. x 3/8" Stud - Battery	*1801486
	OPTIONS	
46	Housing Shell - 96" [Includes: 47; 2 of 48 & 49; 6 of 50]	1801062
	Housing Shell - 102" [Includes: 47; 2 of 48 & 49; 6 of 50]	1801055
47	Housing Deflector - 105-3/4"	*1800477
48	Housing Top Plate - 102"	*1800505
49	Housing End Plate	*1800571
50	Selt-Threading Bolt - 5/16" x 1-1/4"	*1800460
51	Alum Wind Deflector - 1 PC. (Flash™)	*1801919
52	Alum Arm Rest Kit [Includes: 58; 2 of 53, 54, 55, 56 & 57]	1801999
53	Pivot Arm Rest	1801324
54	Rubber Bumper - Drilled - 4"	1801012
55	Lock Nut - 5/16"	*1800990
56	Flat Washer - 5/16"	*1800989
57	Cap Screw - 3/8" x 1-1/2"	*1800790
58	Pivot Arm Rest Hdw Bag	*1801408
59	Durabuilt™ Solenoid Kit 12V - 8 Ga.	*1809047
60	Durabuilt™ Cable Assy	*1809061
61	Rocker Switch Bracket	1800440
62	Circuit Breaker - 40 Amp - Marine Grade	*1800575

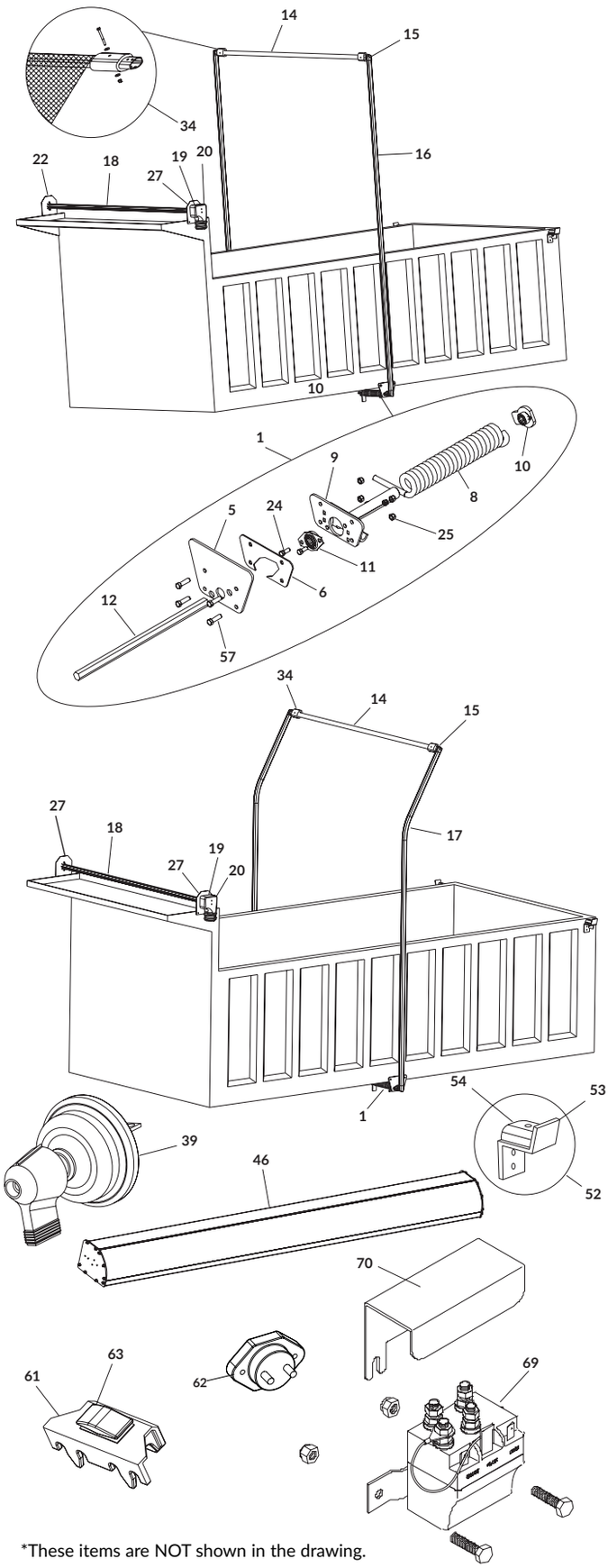

*These items are NOT shown in the drawing.

	DESCRIPTION	P/N
63	Rocker Switch	*1800602
64	Hex Nut - 5/16"	*1800765
65	Hex Head Cap Screw - 1/4" x 1-1/2"	*1800783
66	Lock Washer - 5/16"	*1800787
67	Ring Terminal - 6 Ga. x 3/8" Stud - Battery	*1800927
68	Ring Terminal - 6 Ga. x 1/4" Stud	*1800658
69	Motor-Rev Solenoid 12V - 2 Pt Mnt - Black Wire	1703845
70	Solenoid Cover	1703896
71	Alum Roller Bar w/Shaft [Includes: 18; 28]	*1800737
72	Spring Pivot Connector	*1801636

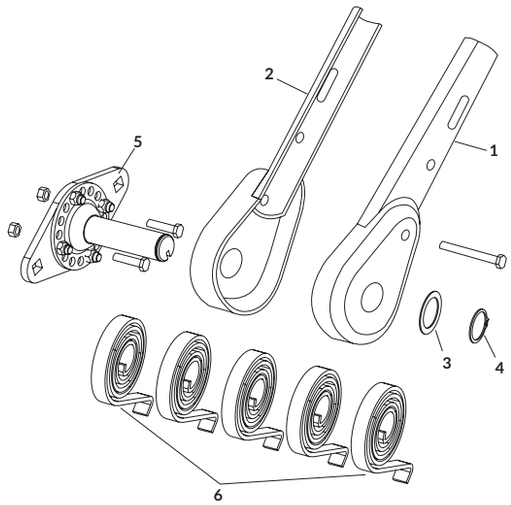

SPRING ASSEMBLIES - CLAMSHELL

	DESCRIPTION	P/N
	Clamshell Pivot Spring Kit [Includes: 2 of 1, 2, 3, 4, 5; 7; 10 of 6]	1809708
1	Clamshell Front Housing [Includes: 2 of 3, 4, 5; 7; 10 of 6]	1800769
2	Clamshell Back Housing	1800934
3	Shim - 1-1/4" ID x .047	1800977
4	Retaining Ring - 1-1/4"	1800978
5	Pivot Spring Assy w/Base - Adjustable 5-Spring	1809825
6	Spiral Torsion Spring	1800763
7	Pivot Mount Hdw	*1801407

*These items are NOT shown in the drawing.

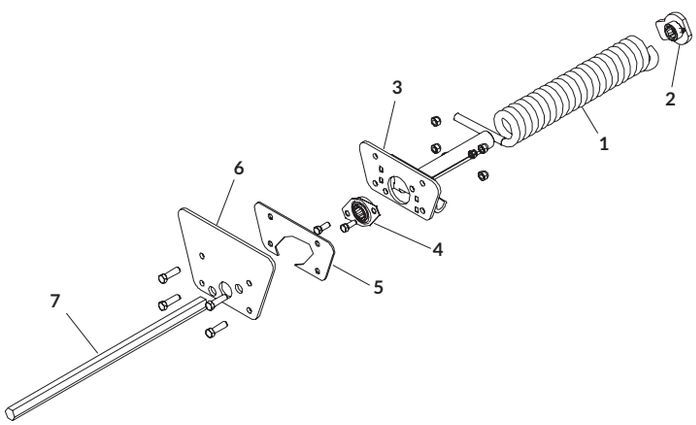

SPRING ASSEMBLIES - UNDER BODY

	DESCRIPTION	P/N
	Under body Spring Assy - 22 Coil - L [Includes: 4; 5; 6; 7]	1800963
	Under body Spring Assy - 22 Coil - R [Includes: 4; 6; 7]	1800965
	Under body Spring Sub-Assy - 22 Coil - L [Includes: 6; 7]	1808485
	Under body Spring Sub-Assy - 22 Coil - R [Includes: 6; 7]	1808486
1	Torsion Spring 22-Coil - L	1800279
	Torsion Spring 22-Coil - R	1800280
2	Spring Lever - Under body	1800967
3	Retention Plate Weldment	1800962
4	Hex Bearing - 7/8" ID	1801243
5	Spring Spacer Plate - Under body	1801049
6	Universal Mtg Plate - Under body	1800960
7	Spring Hex Shaft - 22-1/2"	1810388

Table of Contents

Replacement Parts

TRAILERS 38' AND 41'

	DESCRIPTION	P/N
1	Under body Spring Assy - 22 Coil - L [Includes: 5; 6; 8; 9; 10; 11; 12; 2 of 22 & 31]	1800963
	Under body Spring Assy - 14 Coil - L [Includes: 5; 6; 8; 9; 10; 11; 12; 2 of 22 & 28]	1801550
2	Under body Spring Assy - 22 Coil - R [Includes: 5; 6; 8; 9; 10; 11; 12; 2 of 22 & 28]	*1800965
	Under body Spring Assy - 14 Coil - R [Includes: 5; 6; 8; 9; 10; 11; 12; 2 of 22 & 28]	*1801551
3	Under body Spring Sub-Assy - 22 Coil - L [Includes: 8; 9; 10; 11; 12; 2 of 22 & 28]	*1808485
4	Under body Spring Sub-Assy - 22 Coil - R [Includes: 8; 9; 10; 11; 12; 2 of 22 & 28]	*1808486
5	Universal Mtg Plate - Under body	1800960
6	Spring Spacer Plate - Under body	1801049
7	Spring Pivot Connector	*1801636
8	Torsion Spring 22-Coil - L	1800279
	Torsion Spring 22-Coil - R	1800280
	Torsion Spring 14-Coil - L	1801442
	Torsion Spring 14-Coil - R	1801438
9	Retention Plate Weldment	1800962
10	Spring Lever - Under body	1800967
11	Hex Bearing - 7/8" ID	1801243
12	Spring Hex Shaft - 22-1/2"	1810388
13	Rear Cross Piece	1800300
14	Cast Elbow - 90°	1800597
15	Alum Return Arm - 240"	1801241
	Alum Return Arm - 258-1/2" (pre-drilled)	1801542
16	Tarp Spool Axle - 3-Way Attachment -98"	1809330
17	Direct-Drive Motor - 900 Watt - 12V	1704878
18	Motor Cover - Chrome - 1 PC.	1811884
19	Dual-Cond Wire - 8 Ga. (per foot)	*1800650
20	Contact Pate Assy [Includes: 21; 22]	*1801567
21	Contact Plate Assy - Base [Includes: 23; 26]	*1801575
22	Contact Base Assy - Top [Includes: 23; 24; 26; 2 of 25]	*1801579
23	Contact Mtg Angle - Steel	*1801572
24	Contact Mtg Angle - Alum	*1801573
25	Brass Tab	*1801574
26	Contact Pad	*1801583
27	Alum Housing Bracket	1800574
28	Rubber Bumper Assy - 6"	*1808819
29	Front Brace	*1800370
30	Dual Pole Conductor Plug Kit	*1801377
31	Housing Shell - 102"	*1801055
32	Housing Shell - 96"	1801062
33	Reversed Bearing Flange	1801950
34	Alum Arm Rest Kit [Includes: 37; 2 of 36]	*1801999
35	Pivot Arm Rest	*1801324
36	Rubber Bumper - Drilled - 4"	*1801012
37	Pivot Arm Rest Hdw Bag	*1801408
38	Shaft Extension - 3/4" x 6"	*1801204
39	Rotary Switch Kit [Includes: 41; 42; 2 of 43; 8 of 40]	*1802076
40	Heavy-Duty Rotary Switch	*1110551
41	Ring Terminal - 8 Ga. x 1/4" Stud	*1800430
42	Rotary Switch Bracket	*1800516
43	Circuit Breaker - 40 Amp	*1800536
44	Ring Terminal - 8 Ga. x 3/8" Stud - Battery	*1801486
	OPTIONS	
45	Durabuilt™ Solenoid Kit 12V - 8 Ga.	*1809047
46	Durabuilt™ Cable Assy	*1809061
47	Rocker Switch Bracket	*1800440
48	Circuit Breaker - 40 Amp - Marine Grade	*1800575
49	Rocker Switch	*1800602
50	Ring Terminal - 6 Ga. x 3/8" Stud - Battery	*1800927
51	Ring Terminal - 6 Ga. x 1/4" Stud	*1800658
52	Solenoid Switch - 12V	*1800418
53	Solenoid Cover	*1800429
54	Alum Roller Bar w/Shaft [Includes: 16]	*1800737

*These items are not shown in the drawings.

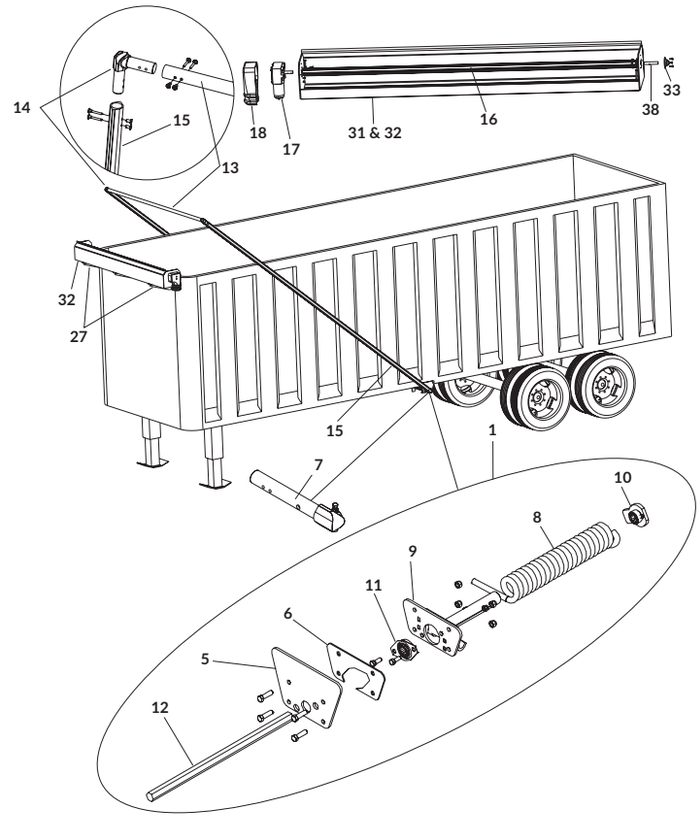

Table of Contents

Replacement Parts

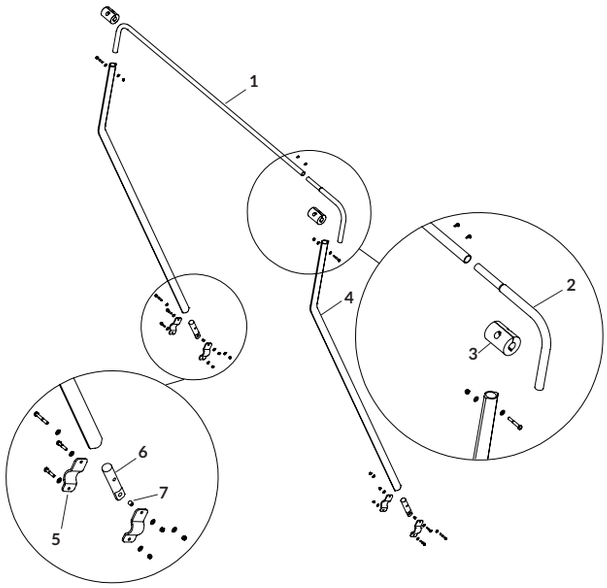

TENSION ARM

	DESCRIPTION	P/N
	KITS	
	Arm-Matic™ Tension Arm Kit - 10' Arms w/2' Bend [Includes: A; 1; 2; 2 of 3 & 4]	1120129
	Arm-Matic™ Tension Arm Kit - 12' Arms w/2' Bend [Includes: A; 1; 2; 2 of 3 & 4]	1120130
	Arm-Matic™ Tension Arm Kit - 14' Arms w/2' Bend [Includes: A; 1; 2; 2 of 3 & 4]	1120131
A	Pivot Connector Hdw	1120132
	PARTS	
1	Tarp Tube Crossover	1118951
2	Tarp Tube Elbow	1118952
3	Rubber Bumper - 3-1/4" x 4-1/2"	1704458
4	Alum Return Arm - 10' w/2' Bend	1704465
	Alum Return Arm - 12' w/2' Bend	1704466
	Alum Return Arm - 14' w/2' Bend	1704467
5	Arm Pivot Clamp Bracket	1120104
6	Arm Pivot Connector	1704642
7	Bushing - 9/16" x 9/16"	1704643

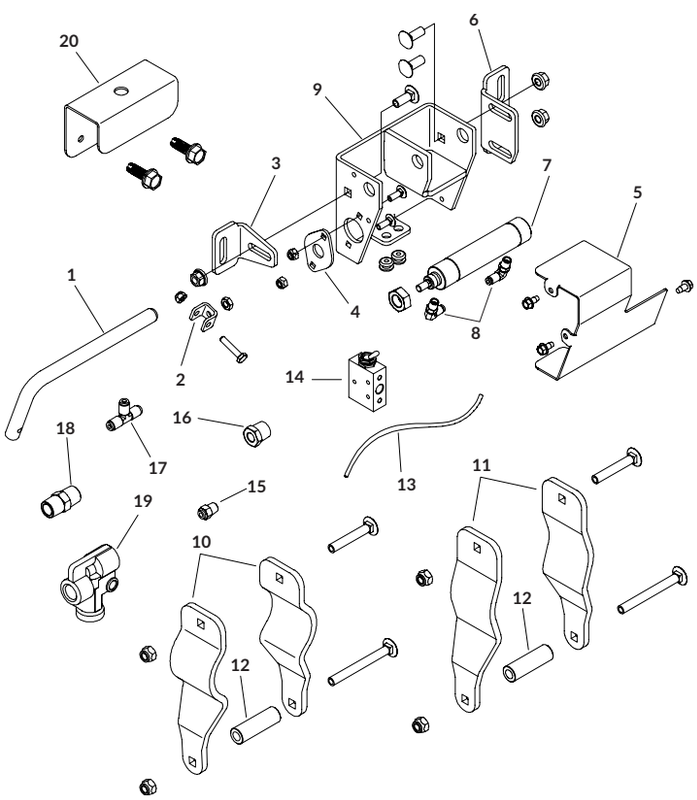

ARM-LOK™

	DESCRIPTION	P/N
	KITS & HARDWARE	
	Arm-Lok™ Kit - For Trucks [Includes: B; C; E; G; 2 of 13 (60')]	1125250
	Arm-Lok™ Kit - For Trailers [Includes: A; B; C; D; F; 2 of 13 (60')]	1125800
A	Arm Alignment Guide Bracket Kit	1127780
B	Arm-Lok™ Assy - R [Includes: 1; 2; 4; 5; 6; 7; 9; 2 of 8; & Hdw]	1125251
C	Arm-Lok™ Assy - L [Includes: 1; 2; 4; 5; 6; 7; 9; 2 of 8; & Hdw]	1125261
D	Solenoid Valve Box - Trailer	1127790
E	Arm-Lok™ Hdw [Includes: 14; 16; 18; 19; 20; 2 of 17; 4 of 15; & Hdw]	1125268
F	Arm-Lok™ Hdw - Trailer [Includes: 15; 16; 18; 19; 3 of 17; & Hdw]	1127742
G	Arm-Lok™ Anchor Hdw [Includes: 2 of 12; 4 of 10 & 11; & Hdw]	1125269
	PARTS	
1	Arm-Lok™ Pin	1125256
2	Cylinder Rod Clevis	1125260
3	Lock Housing Mtg Bracket	1125259
4	Cylinder Mtg Plate	1125257
5	Housing Cover - R	1125255
	Housing Cover - L	1125265
6	Housing Mtg Bracket - R	1125258
	Housing Mtg Bracket - L	1125266
7	Air Cylinder	1705600
8	Air Fitting - 90° Swivel - 5/32" x 1/8"	1705590
9	Housing - R	1125252
	Housing - L	1125262
10	Anchor Bracket	1125270
11	Anchor Bracket - Bullet™	1125989
12	Anchor Catch Sleeve - 2"	1125274
13	Air Brake Tube - 5/32" (per foot)	1705585
14	Toggle Valve - 2 Position - 4 Way	1705586
15	Air Fitting - 5/32" x 1/8"	1705589
16	Hex Bushing Adapter - 3/8" x 1/8"	1705591
17	Air Fitting - Union Tee - 5/32"	1705588
18	Hex Nipple Adapter - 3/8" x 3/8"	1705593
19	Pressure Protection Valve - 70 PSI	1705587
20	Valve Mtg Bracket	1125267

Table of Contents

Replacement Parts

SPRING TRAP™ 2

	DESCRIPTION	P/N
	KITS & HARDWARE	
	Spring Trap II Hold-Down Kit [Includes: A; B; C; 1; 2 of 2]	1128260
A	Pivot Assy - R [Includes: 11; 12; 13; 14; 15; 17]	1128255
B	Pivot Assy - L [Includes: 10; 11; 12; 13; 14; 17]	1128254
C	Spring Trap Hdw [Includes: 2 of 5 & 6; 4 of 7; 8 of 4, 7, 8 & 9]	1128253
	PARTS	
1	Alum Cross Bar	1706186
2	Elbow	1128628
3	Cap Screw - 5/16" x 2-1/4"	1705923
4	Self-Tapping Screw - 3/8" x 1"	1705924
5	Hex Head Cap Screw - 5/16" x 2-1/4"	1202899
6	Nylon Lock Hex Nut - 5/16"	1700419
7	Flat Washer - 5/16"	1700428
8	Flat Washer - 3/8"	1700429
9	Nylon Lock Nut - 3/8"	1705918
10	Spring - L	1706188
11	Pivot Sleeve	1128256
12	Pivot Bracket	1128257
13	Fender Washer - 1/2"	1706097
14	Hex Head Cap Screw - 1/2" x 3-1/4"	1705914
15	Spring - R	1706189
16	Nylon Lock Nut - 5/16"	1705919
17	Flat Washer - 1/2"	1705911

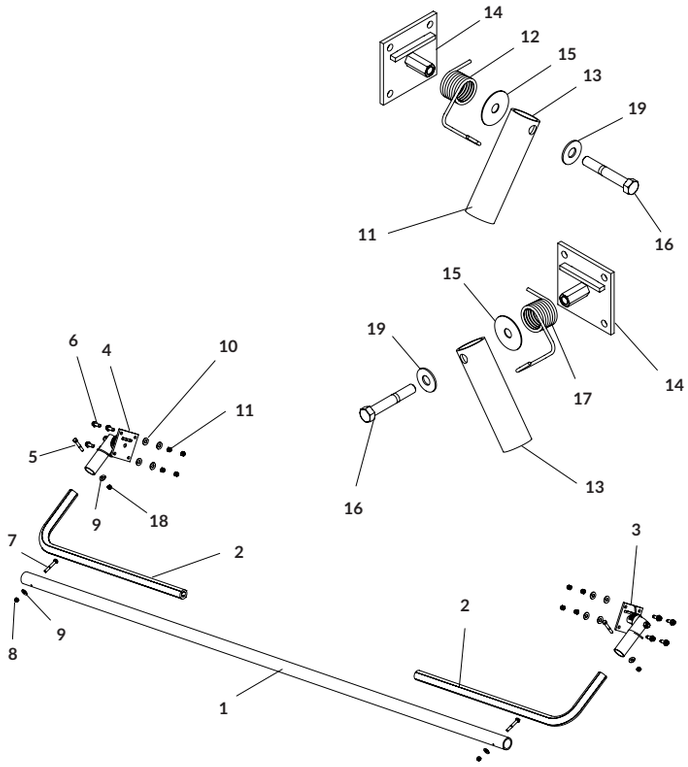

ARM HOLD-DOWNS

	DESCRIPTION	P/N
	KITS	
	Arm Hold-Down Kit [Includes: 2 of 2 & 3; 4 of 1 & 4; & Hdw]	1120389
	PARTS	
1	Arm Anchor Clamp Bracket	1120388
2	Hold-Down Strap Assy	1120390
3	Bushing - 9/16" x 9/16"	1704643
4	Ratchet - 1" Web	1700836

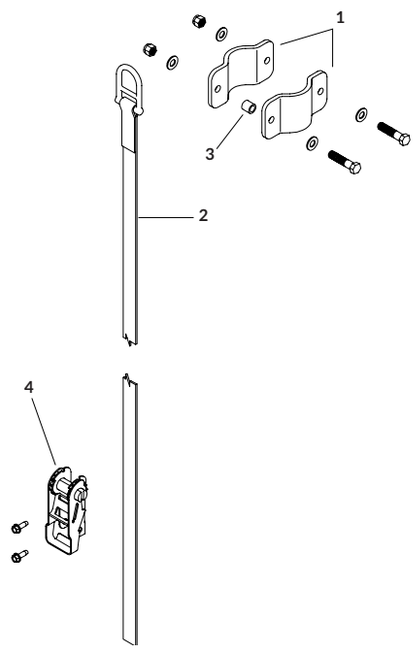

Table of Contents

Replacement Parts

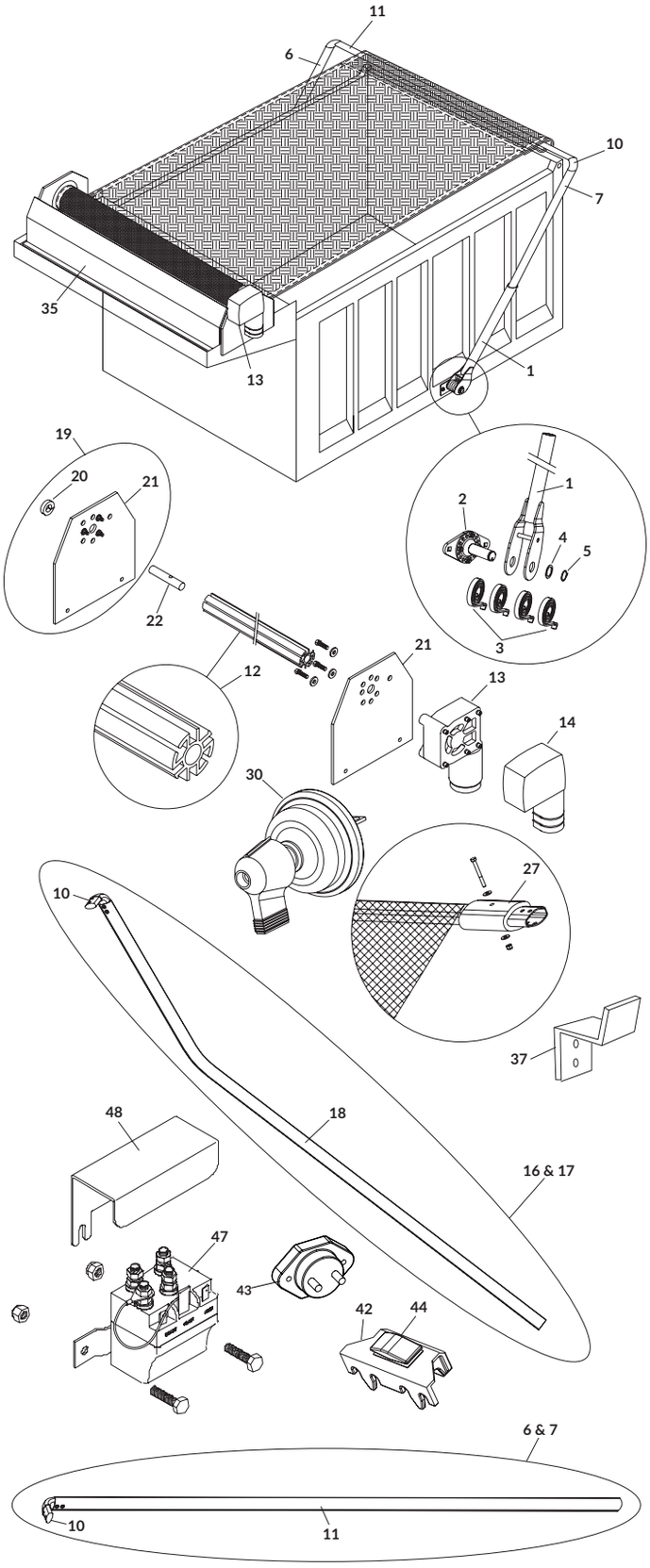

BULLET™

	DESCRIPTION	P/N
	KITS	
	Bullet™ Arm Kit - Straight Arms	1801595
	Bullet™ Arm Kit - Arms w/30° Bend	1805259
	PARTS	
1	Pivot Arm	1801176
2	Pivot Spring Assy w/Base - Adjustable 4-Spring	1809824
3	Spiral Torsion Spring	1800763
4	Shim - 1-1/4" ID x .047	1800977
5	Retaining Ring - 1-1/4"	1800978
6	Upper Arm w/Elbow - L	*1801188
7	Upper Arm w/Elbow - R	1801189
8	Shoulder Bolt - 1/4" x 1-1/4"	*1800609
9	Tee Nut - 1/4-20 x 7/16"	*1800610
10	Elbow - 90° - Alum Diecast	1801972
11	Upper Arm	1801205
12	Tarp Spool Axle - 3-Way Attachment -98"	1809330
13	Direct-Drive Motor - 600 Watt - 12V	1802061
14	Motor Cover - Chrome - 1 PC.	1801585
15	Dual-Cond Wire - 8 Ga. - 60'	*1800028
16	Upper Arm 30° - L	1800333
17	Upper Arm 30° - R	*1800334
18	Upper Arm Extrusion - 30° Bend	*1800332
19	Bearing Plate Assy	1802007
20	Bearing - 3/4"	1800042
21	Universal Bearing Plate	1802000
22	Shaft Extension - 3/4" x 4"	1800980
23	Pivot Mount Hdw	*1801407
24	Head Assy Hdw Bag	*1801568
25	Shaft Collar - 3/4"	*1800089
26	Bumper Kit - 6"	*1800679
27	Tarp Stop - Rubber - 6"	1800437
28	Bullet™ Hdw Bag	*1801409
29	Rotary Switch Kit	*1802076
30	Heavy-Duty Rotary Switch	1110551
31	Ring Terminal - 8 Ga. x 1/4" Stud	*1800430
32	Rotary Switch Bracket	*1800516
33	Circuit Breaker - 40 Amp	*1800536
34	Ring Terminal - 8 Ga. x 3/8" Stud - Battery	*1801486
	OPTIONS	
35	Alum Wind Deflector - 1 PC. (Flash™)	1801919
36	Alum Arm Rest Kit	*1801999
37	Pivot Arm Rest	1801324
38	Tarp Stop - Rubber - 6"	*1800437
39	Pivot Arm Rest Hdw Bag	*1801408
40	Durabuilt™ Solenoid Kit 12V - 8 Ga.	*1809047
41	Durabuilt™ Cable Assy	*1809061
42	Rocker Switch Bracket	1800440
43	Circuit Breaker - 40 Amp - Marine Grade	*1800575
44	Rocker Switch	1800602
45	Ring Terminal - 6 Ga. x 3/8" Stud - Battery	*1800927
46	Ring Terminal - 6 Ga. x 1/4" Stud	*1800658
47	Motor-Rev Solenoid 12V - 2 Pt Mnt - Black Wire	1703845
48	Solenoid Cover	1703896
49	Alum Roller Bar w/Shaft	*1800737

*These items are NOT shown in the drawing.

Table of Contents

Replacement Parts

FRONT DRIVE - THROUGH CAB

	DESCRIPTION	P/N
	PARTS	
1	Direct-Drive Motor - 600 Watt - 12V	1802061
2	Tarp Spool Axle - 3-Way Attachment -98"	1809330
3	Shaft Extension - 3/4" x 4"	1800980
4	Shaft Collar - 3/4"	1800089
5	Sprocket - L	1120376
6	Bearing - 3/4"	1800042
7	Hex Head Cap Screw - 5/16" x 2-1/2"	1703237
8	Hex Head Cap Screw - 3/8" x 1"	1800795
9	Lock Nut - 5/16"	1800990
10	Lock Nut - 3/8"	1800993
11	Flat Washer - 5/16"	1800989
12	Flat Washer - 3/8"	1800994
13	Steel Wind Deflector - 2 PC.	1809571

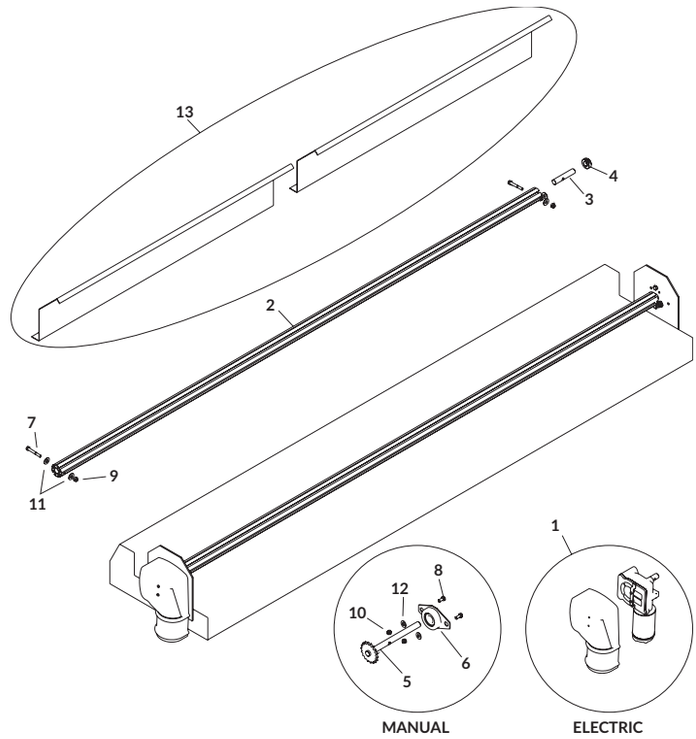

FRONT DRIVE - SIDE PLATES

	DESCRIPTION	P/N
	PARTS	
1	Powder-Coated Universal Bearing Plate	1809563
2	Powder-Coated Bearing Plate Assy	1809564
3	Tarp Spool Axle - 3-Way Attachment -98"	1809330
4	Shaft Extension - 3/4" x 4"	1800980
5	Shaft Collar - 3/4"	1800089
6	Sprocket - L	1120376
7	Hex Head Cap Screw - 5/16" x 2-1/2"	1703237
8	Cap Screw - 3/8" x 1-1/2"	1800790
9	Lock Nut - 5/16"	1800990
10	Lock Nut - 3/8"	1800993
11	Flat Washer - 5/16"	1800989
12	Flat Washer - 3/8"	1800994

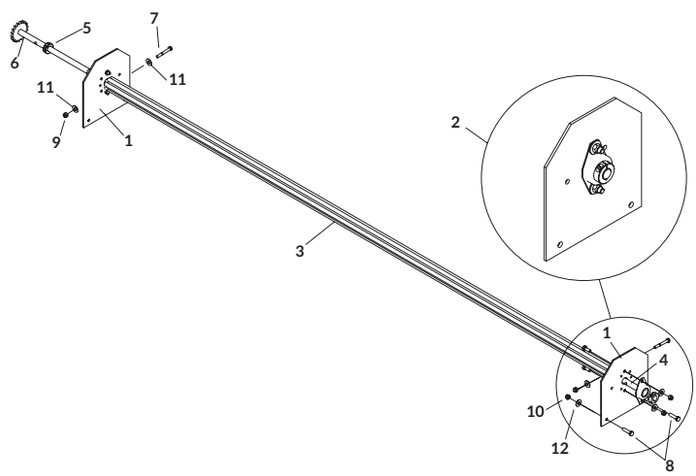

5-SPRING EXTERNAL PIVOTS

	DESCRIPTION	P/N
	PARTS	
1	Spring Pivot - 5-Spring	1809609
2	Spiral Torsion Spring	1800763
3	Pivot Spring Assy w/Base - Adjustable 5-Spring	1809825
4	Carriage Bolt - 1/2" x 1-1/2"	1800356
5	Lock Nut - 1/2"	1800995
6	Flat Washer - 1/2"	1800996
7	Shim - 1-1/4" ID x .047	1800977
8	Retaining Ring - 1-1/4"	1800978

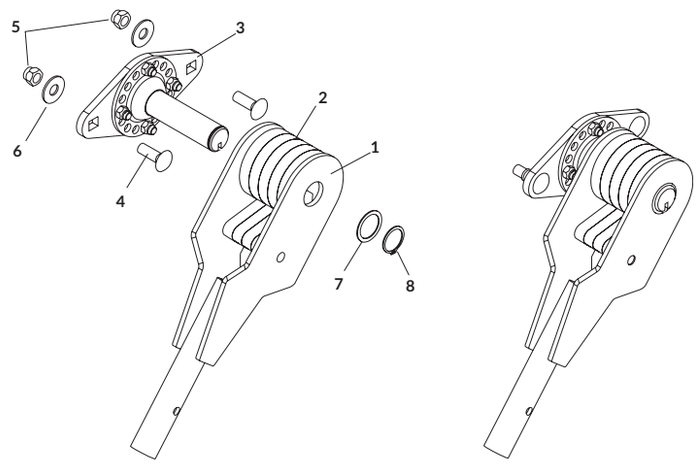

Table of Contents

Replacement Parts

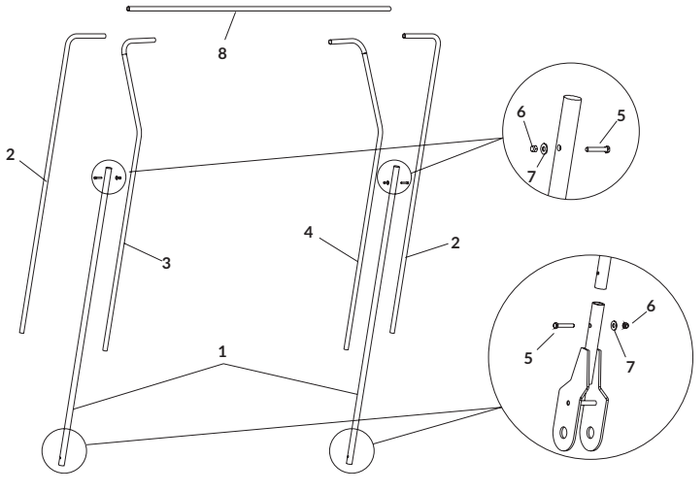

ARM ASSEMBLIES

	DESCRIPTION	P/N
	PARTS	
1	Lower Arm	1809407
2	Upper Arm	1809408
3	Upper Arm 30° - L	1809553
4	Upper Arm 30° - R	1809554
5	Cap Screw - 3/8" x 2-1/4"	1809567
6	Lock Nut - 3/8"	1800993
7	Flat Washer - 3/8"	1800994
8	Rear Cross Bar	*1809409

*These items are NOT shown in the drawing.

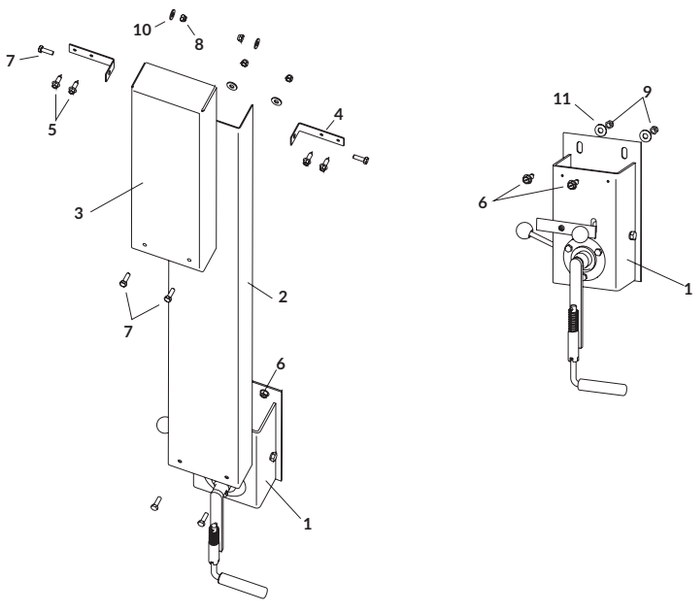

CONTROL BOX & CHAIN GUARDS

	DESCRIPTION	P/N
	PARTS	
1	Crank Box Assy - Hammer™ II	1800178
2	Lower Chain Guard	1800186
3	Upper Chain Guard	1800185
4	Chain Guard Bracket	1800404
5	Sheet Metal Screw - #10 x 1"	1800802
6	Self-Tapping Screw - 3/8" x 1"	1700400
7	Hex Head Cap Screw - 5/16" x 1"	1800998
8	Lock Nut - 5/16"	1800990
9	Lock Nut - 3/8"	1800993
10	Flat Washer - 5/16"	1800989
11	Flat Washer - 3/8"	1800994
12	Chain - #40 x 10'	*1800188

*These items are NOT shown in the drawing.

XEL ELECTRIC DRIVE

	DESCRIPTION	P/N
	PARTS	
1	Powder-Coated Universal Bearing Plate	1809563
2	Bearing - 3/4"	1800042
3	Tarp Spool Axle - 3-Way Attachment -98"	1809330
4	Shaft Extension - 3/4" x 4"	1800980
5	Carriage Bolt - 5/16" x 2-1/2"	1801187
6	Flat Washer - 5/16"	1800989
7	Lock Nut - 5/16"	1800990
8	Hex Head Cap Screw - 3/8" x 1"	1800795
9	Flat Washer - 3/8"	1800994
10	Lock Nut - 3/8"	1800993
11	Powder-Coated Bearing Plate Assy [Includes: 1; 2; 2 of 8, 9 & 10]	1809564
12	Direct-Drive Motor - 600 Watt - 12V	1802061
13	Motor Cover - Chrome - 1 PC.	1801585

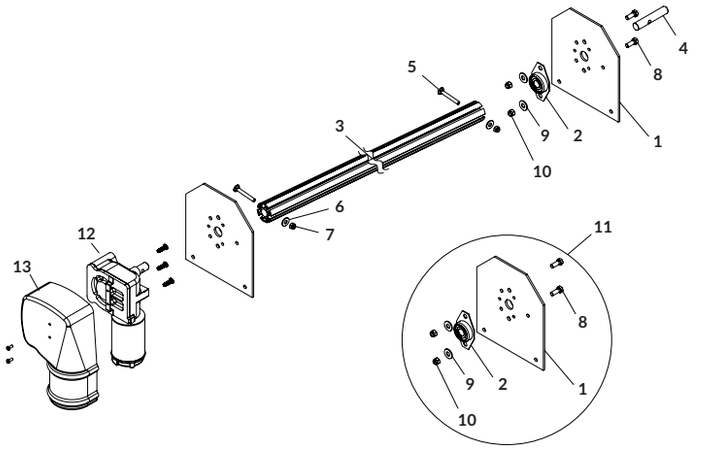

XDD DIRECT DRIVE

	DESCRIPTION	P/N
	PARTS	
1	Powder-Coated Universal Bearing Plate	1809563
2	Bearing - 3/4"	1800042
3	Tarp Spool Axle - 3-Way Attachment -98"	1809330
4	Direct Drive Crank	1810354
5	Shaft Extension - 3/4" x 4"	1800980
6	Hex Head Cap Screw - 3/8" x 1"	1800795
7	Flat Washer - 3/8"	1800994
8	Lock Nut - 3/8"	1800993
9	Carriage Bolt - 5/16" x 2-1/2"	1801187
10	Flat Washer - 5/16"	1800989
11	Lock Nut - 5/16"	1800990
12	Powder-Coated Bearing Plate Assy [Includes: 1; 2; 2 of 6, 7 & 8]	1809564

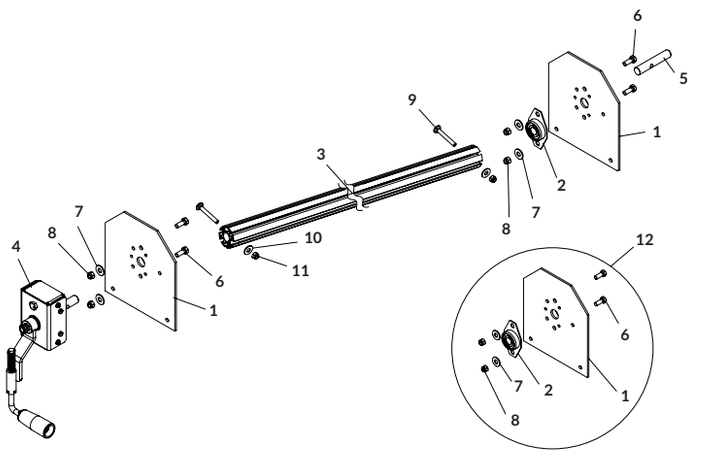

XCD CHAIN DRIVE

	DESCRIPTION	P/N
	PARTS	
1	Powder-Coated Universal Bearing Plate	1809563
2	Tarp Spool Axle - 3-Way Attachment -98"	1809330
3	Shaft Extension - 3/4" x 4"	1800980
4	Shaft Collar - 3/4"	1800089
5	Bearing - 3/4"	1800042
6	Hex Head Cap Screw - 3/8" x 1"	1800795
7	Flat Washer - 3/8"	1800994
8	Lock Nut - 3/8"	1800993
9	Carriage Bolt - 5/16" x 2-1/2"	1801187
10	Flat Washer - 5/16"	1800989
11	Lock Nut - 5/16"	1800990
12	Sprocket - L	1120376
13	Powder-Coated Bearing Plate Assy [Includes 1; 5; 2 of 6, 7 & 8]	1809564

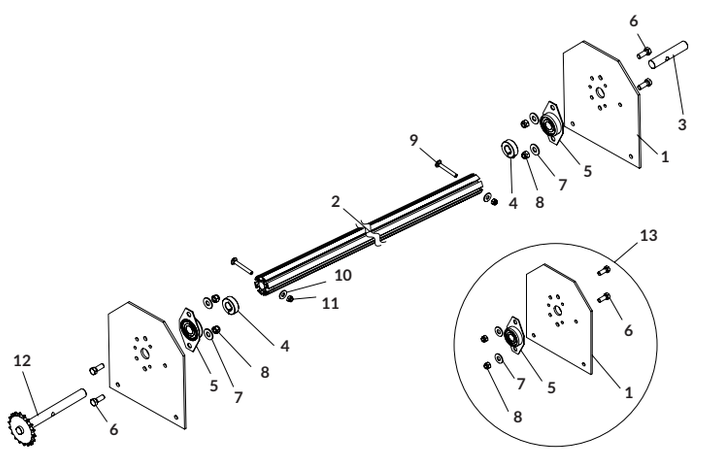

Table of Contents

Replacement Parts

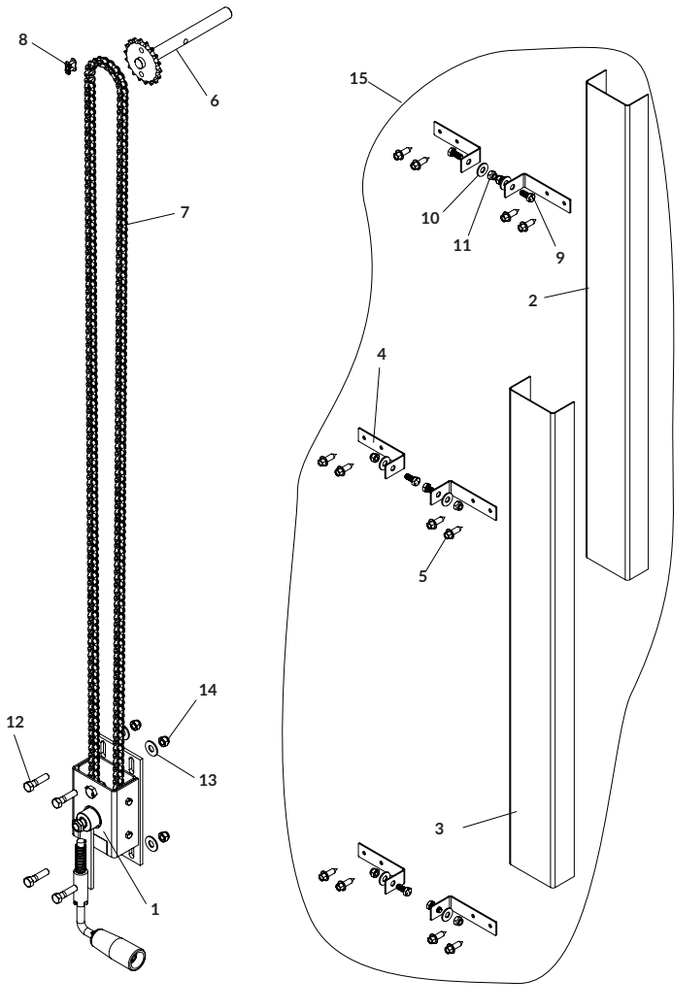

CHAIN & GUARD

	DESCRIPTION	P/N
	PARTS	
1	Crank Box Assy	1800088
2	Upper Guard	1800402
3	Lower Guard	1800403
4	Chain Guard Bracket	1800404
5	Sheet Metal Screw - #10 x 1"	1800802
6	Sprocket - L	1120376
7	Chain - #40 x 10'	1800188
8	Chain - #40 Master Link	1800058
9	Hex Head Cap Screw - 5/16" x 3/4"	1804907
10	Flat Washer - 5/16"	1800989
11	Lock Nut - 5/16"	1800990
12	Cap Screw - 3/8" x 1-1/2"	1800790
13	Flat Washer - 3/8"	1800994
14	Lock Nut - 3/8"	1800993
15	Chain Guard	1800036

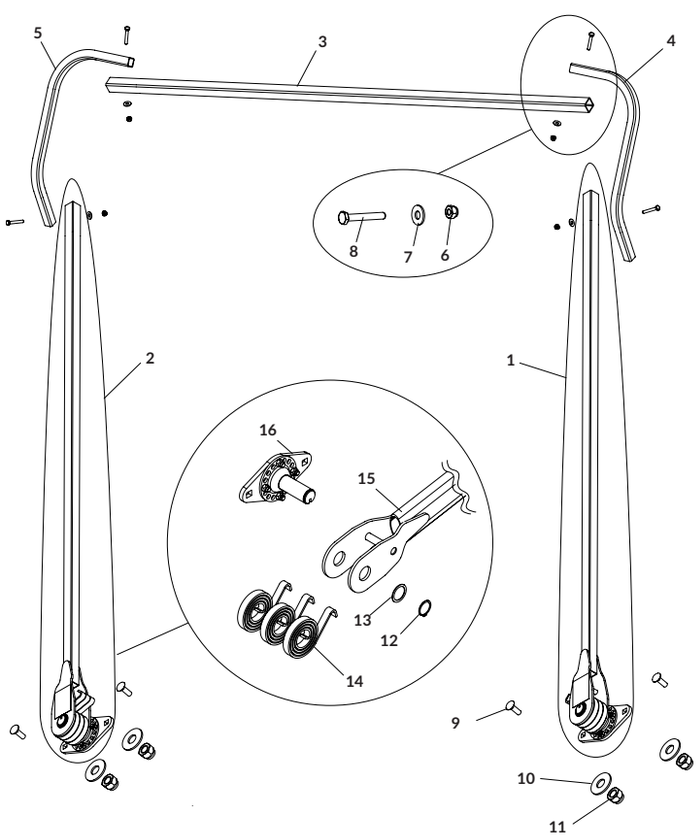

ARM ASSEMBLIES - GALVANIZED

	DESCRIPTION	P/N
	PARTS	
1	Pivot Arm Assy - L	1800123
2	Pivot Arm Assy - R	1800124
3	Galvanized Rear Cross Bar	1801758
4	Galvanized Bent Arm - L	1801759
5	Galvanized Bent Arm - R	1801760
6	Hex Lock Nut - 1/4"	1800699
7	Flat Washer - 1/4"	1800784
8	Hex Head Cap Screw - 1/4" x 1-3/4"	1705983
9	Carriage Bolt - 1/2" x 1-1/2"	1800356
10	Flat Washer - 1/2"	1800996
11	Lock Nut - 1/2"	1800995
12	Retaining Ring - 1-1/4"	1800978
13	Shim - 1-1/4" ID x .047	1800977
14	Spiral Torsion Spring	1800763
15	Pivot Arm	1801757
16	Pivot Spring Assy w/Base - Adj. 3-Spring	1811436

Table of Contents

Replacement Parts

SPRING TRAP™ 2

	DESCRIPTION	P/N
	KITS & HARDWARE	
	Spring Trap II Hold-Down Kit [Includes: A; 1; 3; 4; 2 of 2]	1128260
A	Spring Trap Hdw [Includes: 2 of 7 & 8; 4 of 9 & 10; 8 of 6 & 11]	1128253
	PARTS	
1	Alum Cross Bar	1706186
2	Elbow	1128628
3	Pivot Assy - R	1128255
4	Pivot Assy - L	1128254
5	Cap Screw - 5/16" x 2-1/4"	1705923
6	Self-Tapping Screw - 3/8" x 1"	1705924
7	Hex Head Cap Screw - 5/16" x 2-1/4"	1202899
8	Nylon Lock Hex Nut - 5/16"	1700419
9	Flat Washer - 5/16"	1700428
10	Flat Washer - 3/8"	1700429
11	Nylon Lock Nut - 3/8"	1705918
12	Spring - L	1706188
13	Pivot Sleeve	1128256
14	Pivot Bracket	1128257
15	Fender Washer - 1/2"	1706097
16	Hex Head Cap Screw - 1/2" x 3-1/4"	1705914
17	Spring - R	1706189
18	Nylon Lock Nut - 5/16"	1705919
19	Flat Washer - 1/2"	1705911

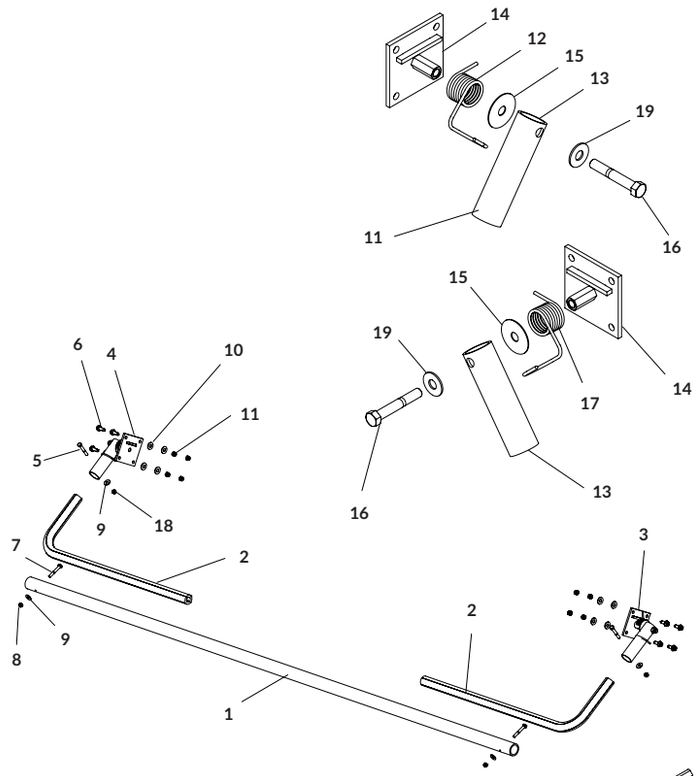

WIND DEFLECTOR

	DESCRIPTION	P/N
	PARTS	
1	Steel Wind Deflector - 2 PC.	1801943

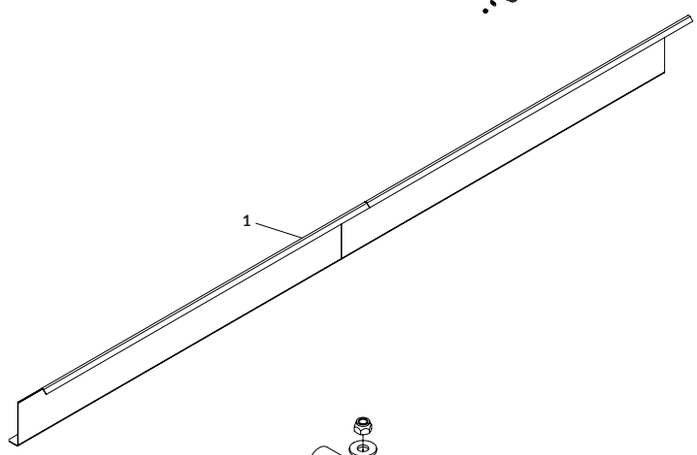

ARM REST - HEAVY-DUTY

	DESCRIPTION	P/N
	KITS	
	Steel Heavy-Duty Arm Rest Kit	1802008
A	Arm Rest Hdw	1801693
	PARTS	
1	Pivot Arm Rest	1801324
2	Rubber Bumper - Drilled - 4"	1801012
3	Flat Washer - 5/16"	1800989
4	Lock Nut - 5/16"	1800990
5	Hex Head Cap Screw - 5/16" x 1"	1800998

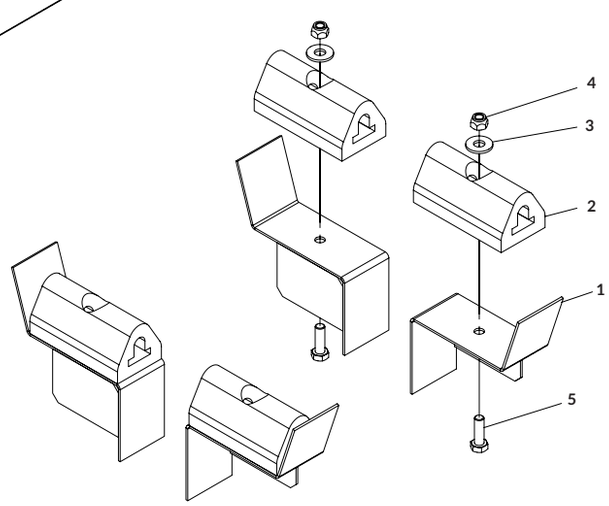

ARM REST - MEDIUM-DUTY

	DESCRIPTION	P/N
	KITS	
	Medium-Duty Arm Rest Kit [Includes 2 of 1]	1802081
	PARTS	
1	Steel Pivot Arm Rest	1800254

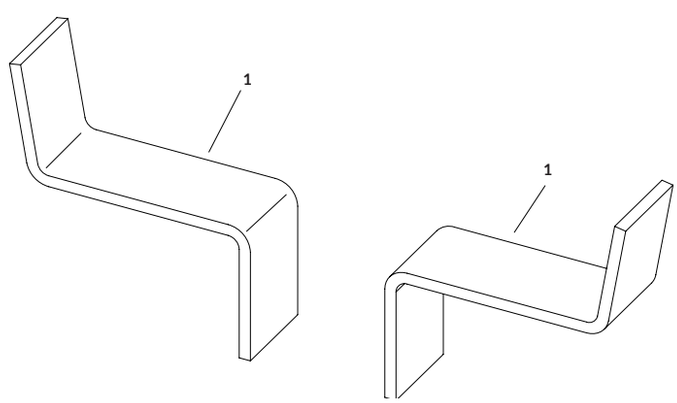

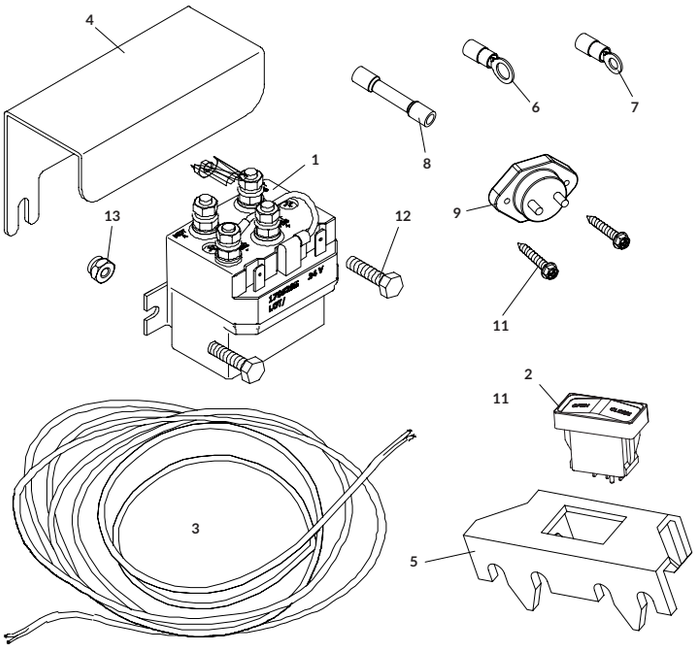

ROCKER SWITCH

	DESCRIPTION	P/N
	KITS	
	Durabuilt™ Solenoid Kit 12V - 8 Ga.	1809047
	PARTS	
1	Motor-Rev Solenoid 12V - 2 Pt Mnt - Black Wire	1703845
2	Rocker Switch	1800602
3	Durabuilt™ Cable Assy	*1809061
4	Solenoid Cover	1703896
5	Rocker Switch Bracket	1800440
6	Ring Terminal - 8 Ga. x 3/8" Stud - Battery	1801486
7	Ring Terminal - 8 Ga. x 1/4" Stud	1800430
8	Butt Connector - 18-22 Ga.	1800441
9	Circuit Breaker - 40 Amp - Marine Grade	1800575
10	Dual-Cond Wire - 8 Ga. - 60'	*1800028
11	Sheet Metal Screw - #10 x 1"	1800802
12	Hex Flange Cap Screw - #10-24 x 1"	1704905
13	Nylon Lock Hex Nut - #10-24	1808844

*These items are NOT shown in the drawing.

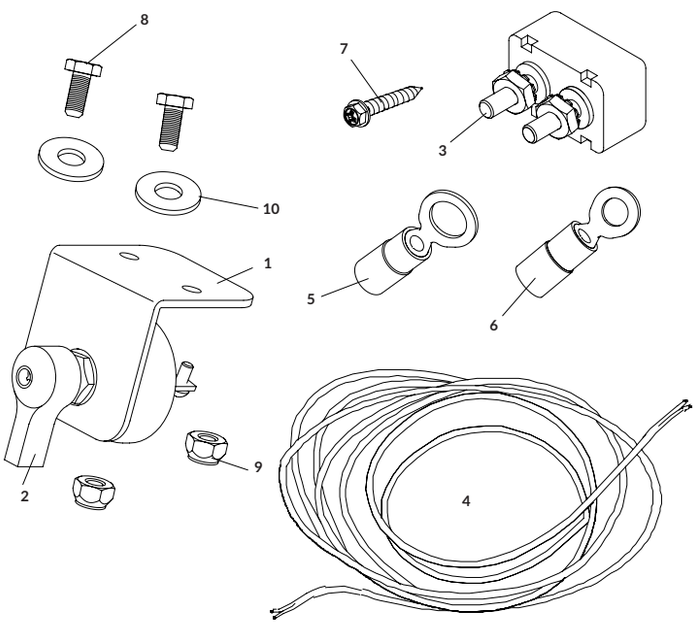

ROTARY SWITCH

	DESCRIPTION	P/N
	KITS	
	Rotary Switch Kit [Includes: A; 1; 2; 3}	1802076
A	Rotary Switch Hdw [Includes: 2 of 5, 7, 8, 9 & 10]	1808999
	PARTS	
1	Rotary Switch Bracket	1800516
2	Heavy-Duty Rotary Switch	1110551
3	Circuit Breaker - 40 Amp	1800536
4	Dual-Cond Wire - 8 Ga. - 60'	1800028
5	Ring Terminal - 8 Ga. x 3/8" Stud - Battery	1801486
6	Ring Terminal - 8 Ga. x 1/4" Stud	1800430
7	Sheet Metal Screw - #10 x 1"	1800802
8	Hex Head Cap Screw - 1/4" x 5/8"	1800771
9	Hex Lock Nut - 1/4"	1800699
10	Flat Washer - 1/4"	1800784

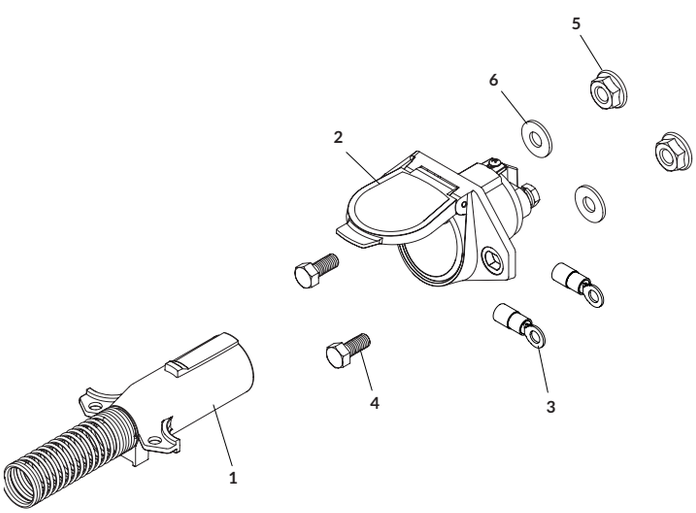

DUAL CONDUCTOR PLUG

	DESCRIPTION	P/N
	KITS	
	Dual Pole Conductor Plug Kit	1801377
	PARTS	
1	HD Dual-Cond Plug - Horiz Pin	1704715
2	HD Dual-Cond Socket - Horiz Pin	1704714
3	Ring Terminal - 8 Ga. x 1/4" Stud	1800430
4	Hex Head Cap Screw - 5/16" x 3/4"	1804907
5	Top Lock Flange Nut - 5/16"	1704946
6	Flat Washer - 1/4"	1800784

Table of Contents

Replacement Parts

NO HOUSING

	DESCRIPTION	P/N
	KITS & HARDWARE	
A	Pull Bar Kit [Includes: A; 1; 2]	1800034
A	Pull Bar Hdw Bag [Includes: 12; 17; 2 of 13, 14 & Hdw]	1800131
	PARTS	
1	Alum Tube - 104" x .995"	1800087
2	Rope Assy w/Snap - 1/2"	1801351
3	Tailgate Latch	1800135
4	Roller Bar Assy	1800033
5	Spring - 1-7/8"	1800521
6	Flange Bearing - 3/4"	1800519
7	End Plate Assy - R	1800936
8	End Plate Assy - L	1800940
9	Ratchet Spring	*1800698
10	Ratchet Spacer	*1800702
11	Ratchet Pawl w/Lever	*1800917
12	Shaft Collar - 1" OS	1800017
13	Eyebolt - 5/16" x 1-1/4"	1800782
14	Fender Washer - 1" ID x 3" OD	1800030
15	Fender Washer - 1" ID x 5" OD	1801354
16	PVC Roller - 1" x 6"	1800779
17	J-Hook - Steel	*1800021

*These items are NOT shown in the drawing.

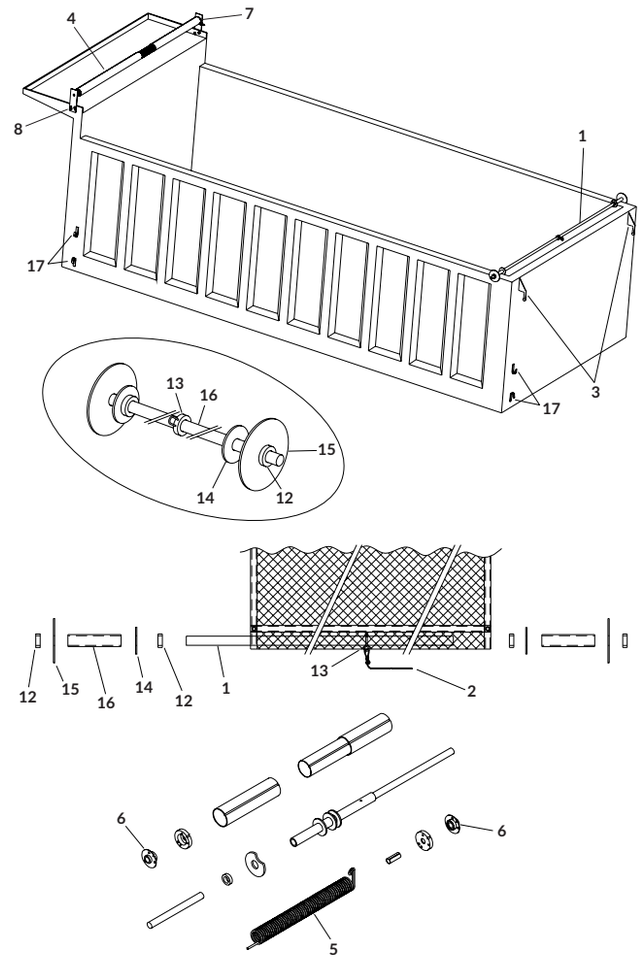

WITH HOUSING

	DESCRIPTION	P/N
	HARDWARE	
	2000SRH Hdw Box	1800613
	2000SRH Hdw Bag	1800095
	Mounting Hdw	1800128
	PARTS	
1	Alum Tube - 104" x .995"	1800087
2	Rope Assy	1800239
3	Housing - Center	1800395
4	Housing - L	1800517
5	Housing - R	1800518
6	Ratchet Spring	*1800698
7	Ratchet Spacer	*1800702
8	Ratchet Pawl w/Lever	*1800917
9	Roller Bar Assy	*1800033
10	Eyebolt - 5/16" x 1-1/4"	1800782
11	Fender Washer - 1" ID x 3" OD	1800030
12	Fender Washer - 1" ID x 5" OD	1801354
13	Spring - 1-7/8"	1800521
14	Flange Bearing - 3/4"	1800519
15	J-Hook - Steel	1800021
16	Tailgate Latch	*1800135
17	PVC Roller - 1" x 6"	1800779
18	Shaft Collar - 1" OS	1800017
19	Mounting Angle	1800364

*These items are NOT shown in the drawing.

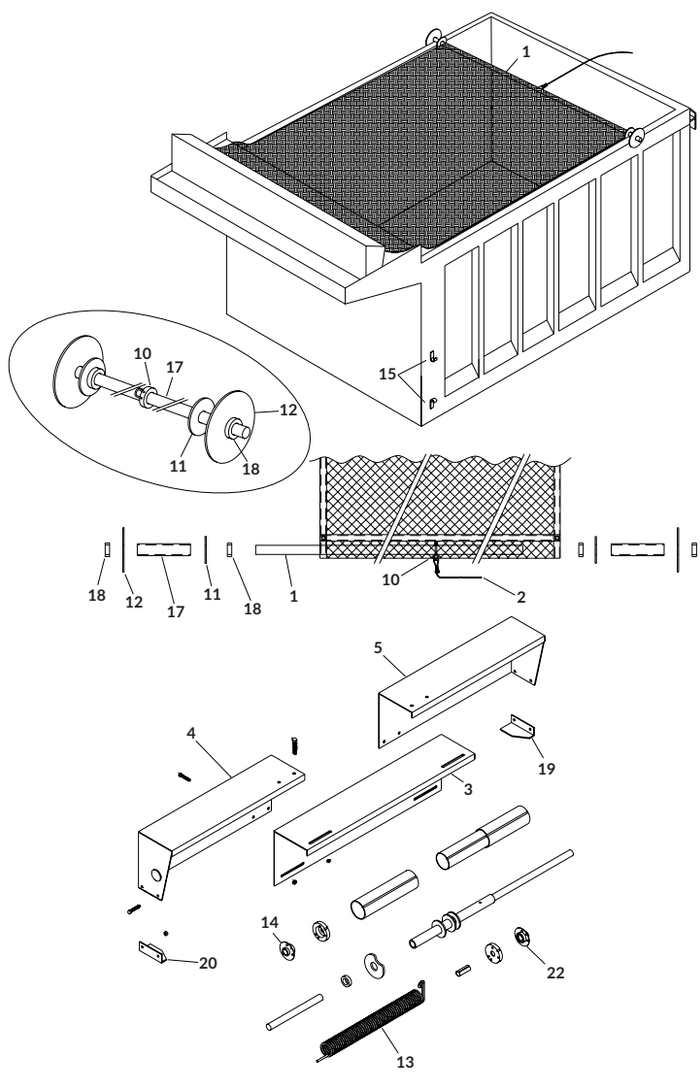

Table of Contents

Replacement Parts

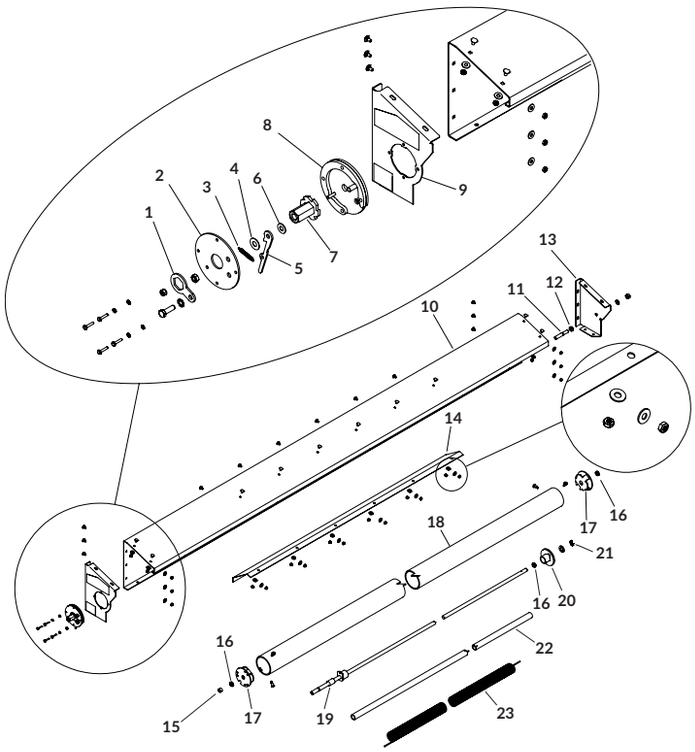

HOUSING

	DESCRIPTION	P/N
	KITS	
	Tarp Housing Assy - 80" [Includes: A; H; 9; 10; 11; 12; 13; 14; 15; 33; 34; 4 of 28 & 29; 22 of 30, 31 & 32]	1121922
	Tarp Housing Assy - 84" [Includes: B; H; 9; 10; 11; 12; 13; 14; 15; 33; 34; 4 of 28 & 29; 22 of 30, 31 & 32]	1121964
	Tarp Housing Assy - 88" [Includes: C; H; 9; 10; 11; 12; 13; 14; 15; 33; 34; 4 of 28 & 29; 22 of 30, 31 & 32]	1121957
	Tarp Housing Assy - 90" [Includes: D; H; 9; 10; 11; 12; 13; 14; 15; 33; 34; 4 of 28 & 29; 22 of 30, 31 & 32]	1126639
	Tarp Housing Assy - 92" [Includes: E; H; 9; 10; 11; 12; 13; 14; 15; 33; 34; 4 of 28 & 29; 22 of 30, 31 & 32]	1121556
	Tarp Housing Assy - 96" [Includes: F; H; 9; 10; 11; 12; 13; 14; 15; 33; 34; 4 of 28 & 29; 22 of 30, 31 & 32]	1121315
	Tarp Housing Assy - 102" [Includes: G; H; 9; 10; 11; 12; 13; 14; 15; 33; 34; 4 of 28 & 29; 22 of 30, 31 & 32]	1121316
A	Tarp Spool Assy - 80" [Includes: 16; 18; 19; 20; 21; 22; 23; 2 of 17 & 35; 4 of 36]	1121924
B	Tarp Spool Assy - 84" [Includes: 16; 18; 19; 20; 21; 22; 23; 2 of 17 & 35; 4 of 36]	1121966
C	Tarp Spool Assy - 88" [Includes: 16; 18; 19; 20; 21; 22; 23; 2 of 17 & 35; 4 of 36]	1121959
D	Tarp Spool Assy - 90" [Includes: 16; 18; 19; 20; 21; 22; 23; 2 of 17 & 35; 4 of 36]	1126644
E	Tarp Spool Assy - 92" [Includes: 16; 18; 19; 20; 21; 22; 23; 2 of 17 & 35; 4 of 36]	1121558
F	Tarp Spool Assy - 96" [Includes: 16; 18; 19; 20; 21; 22; 23; 2 of 17 & 35; 4 of 36]	1121322
G	Tarp Spool Assy - 102" [Includes: 16; 18; 19; 20; 21; 22; 23; 2 of 17 & 35; 4 of 36]	1121323
H	Tarp Spool Ratchet Assy [Includes: 1; 2; 3; 4; 5; 6; 7; 8; 24; 25; 26; 27]	1121339
	PARTS	
1	Ratchet Lock Plate	1121348
2	Ratchet Cover Plate	1121347
3	Extension Spring - 1-15/16"	1704904
4	Pawl Washer - 3/8"	1702881
5	Ratchet Pawl	1121346
6	Nylon Washer - 1/16" x 3/4" x 5/16"	1704911
7	Ratchet Gear	1705718
8	Ratchet Base Assy	1121340
9	End Panel - L	1121317
10	Tarp Housing Shield - 80"	1121923
	Tarp Housing Shield - 84"	1121965
	Tarp Housing Shield - 88"	1121958
	Tarp Housing Shield - 90"	1126643
	Tarp Housing Shield - 92"	1121557
	Tarp Housing Shield - 96"	1121319
	Tarp Housing Shield - 102"	1121320
11	Tarp Spool Idler Stud	1121349
12	Hex Jam Nut - 1/2"	1700413
13	End Panel - R	1121318
14	Tarp Housing Shield Brace	1121321
15	Pulley Spacer	1110649
16	Flange Bearing - 1/2" ID - Snap In Nyliner	1704908
17	Tarp Spool End Cap Assy	1128200
18	Tarp Spool Tube - 78-3/4" - 80	1121925
	Tarp Spool Tube - 82-3/4" - 84	1121967
	Tarp Spool Tube - 86-3/4" - 88	1121960
	Tarp Spool Tube - 88-3/4" - 90	1126647
	Tarp Spool Tube - 90-3/4" - 92	1121559
	Tarp Spool Tube - 94-3/4" - 96	1121337
	Tarp Spool Tube - 100-3/4" - 102	1121338

	DESCRIPTION	P/N
19	Spring Shaft	1121332
20	Spring Tube Catch	1121328
21	Cotter Pin - 1/8" x 1"	1704907
22	Spring Spacer Tube	1121327
23	Torsion Spring - 1-1/2" x 1/8" x 47"	1704765
24	Nylon Lock Nut - #10-24	*1704813
25	Nylon Lock Nut - 5/16" Thin	*1704454
26	Lock Washer - 5/16" - External Tooth	*1704912
27	Hex Head Cap Screw - 5/16" x 1"	*1704416
28	Hex Flange Cap Screw - #10-24 x 1"	*1704905
29	Lock Washer - #10 - External Tooth	*1704913
30	Carriage Bolt - 1/4" x 1/2" - GR5	*1704906
31	Flat Washer - 3/8"	*1700429
32	Nylon Lock Nut - 1/4"	*1704185
33	Hex Nut - 1/2"	*1700409
34	Lock Washer - 1/2"	*1700437
35	Flat Washer - 1/2" x 1" OD	*1704919
36	Self-Drilling Screw - 1/4" x 3/4"	*1700398

*These items are NOT shown in the drawing.

MOUNTING STRIPS

	DESCRIPTION	P/N
	KITS	
	Housing Mtg Strip Kit - Alum - 80"	1121974
	Housing Mtg Strip Kit - Alum - 84"	1121976
	Housing Mtg Strip Kit - Alum - 88"	1121975
	Housing Mtg Strip Kit - Alum - 90"	1129431
	Housing Mtg Strip Kit - Alum - 92"	1121574
	Housing Mtg Strip Kit - Alum - 96"	1121366
	Housing Mtg Strip Kit - Alum - 102"	1121387
	Housing Mtg Strip Kit - Steel - 80"	1121971
	Housing Mtg Strip Kit - Steel - 84"	1121973
	Housing Mtg Strip Kit - Steel - 88"	1121972
	Housing Mtg Strip Kit - Steel - 90"	1129432
	Housing Mtg Strip Kit - Steel - 92"	1121573
	Housing Mtg Strip Kit - Steel - 96"	1121365
	Housing Mtg Strip Kit - Steel - 102"	1121386

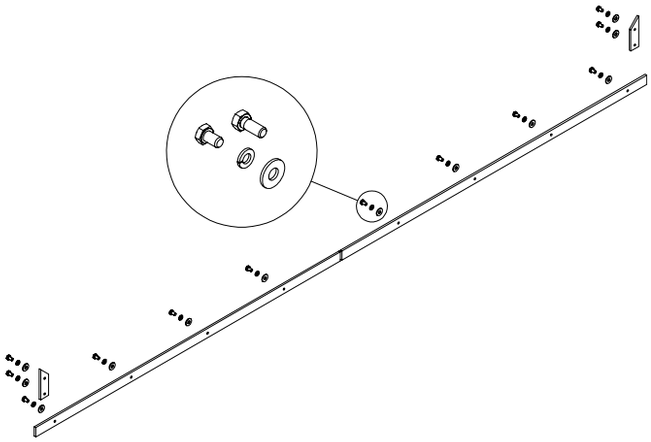

PULL BARS

	DESCRIPTION	P/N
	PARTS	
1	End Plug - 1"	1701595
2	Pull-Bar Guide	1121351
3	Pull-Bar Roller	1121355
4	Pull-Bar - 104"	1121350

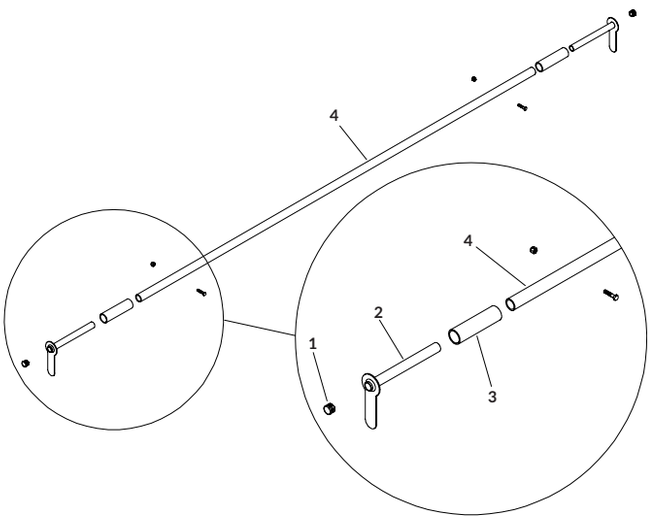

PULL ROPES | HOOKS

	DESCRIPTION	P/N
	HARDWARE	
	Pull Rope/Hook Hdw [Includes: 3; 2 of 1 & 5; 4 of 2 & 5; 8 of 4]	1121356
	PARTS	
1	Pull-Bar Retaining Hook	1121357
2	Box Hook - 3/8" x 4-7/8"	1706059
3	Pull Rope Assy	1127822
4	Self-Tapping Screw - 5/16" x 1"	*1701059
5	Self-Drilling Screw - 1/4" x 3/4"	*1700398
6	Self-Tapping Screw - 3/8" x 1"	1700400

*These items are NOT shown in the drawing.

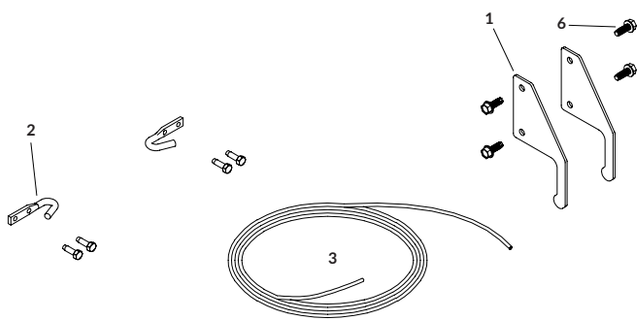

Table of Contents

Replacement Parts

SMART2™ PRODUCT

SMART2™ replacement parts are no longer available. Call 1-800-474-8756 or warranty options.

SMART3™ CONTROL MODULES

LATCHING	P/N
SMART3™ Control Module - Latching - On/Off w/o Safety Lockout	1126893
- Conveyors: While output remains on, supplies 12V to customer-specific conveyor control solenoids.	
- Pump Motors: Can supply 12V continuous signal to customer-specific pump motors or control solenoids.	

MOMENTARY	P/N
SMART3™ Control Module - Momentary - Up/Down	1126898
SMART3™ Control Module - Momentary - Left/Right	1126896
SMART3™ Control Module - Momentary - Extend/Retract	1126895
- Auger Conveyors: Stops/Starts conveyor movement in applications where preexisting controls require a momentary 12V "on" signal to start conveyor, then a sub-sequent momentary 12V "off" signal to stop it.	
- Proportional Valves: Allows for momentary control of proportional valves (for speed control, for example)	

MOMENTARY	P/N
SMART3™ Control Module - Momentary - Open/Closed	1126897
- Proportional Valves: Allows for momentary control of proportional valves (for speed control, for example)	

SMART3™ LITEALL™

W/ SMARTWIRE™ ADAPTER	P/N
SMART3™ LiteALL™ w/SMARTwire™ - 2 Light	1127950

W/O SMARTWIRE™ ADAPTER	P/N
SMART3™ LiteALL™ - 2 Light	1127593

COMPONENTS	P/N
SMART3™ Control Module w/WeatherPack™	1127598

NOTE: Kits includes control module, lights, complete mounting hardware. Does NOT include remote or extension cable.

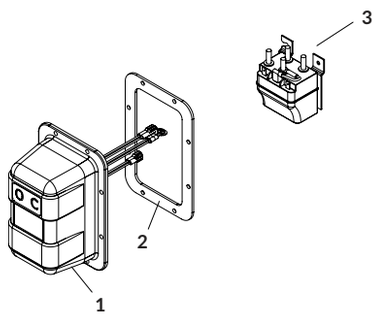

RECEIVERS

	DESCRIPTION	P/N
	EXPRESS MODE	
	+ 4500 SERIES HD	
	SMART3™ Rec - Express - Rear Output	1126860
	SMART3™ Rec - Express - Bottom Output	1126866
1	SMART3™ Rec Cover w/Gasket - Express	1126873
	+ APEX™ | IRONSIDE 2™	
	SMART3™ Rec - Express - Bottom Output	1131765
1	SMART3™ Rec Cover w/Gasket - Express	1131766
	NO EXPRESS MODE	
	+ 4500 SERIES HD	
	SMART3™ Rec - Non-Express - Rear Output	1126968
	SMART3™ Rec - Non-Express - Bottom Output	1126967
1	SMART3™ Rec Cover w/Gasket - Non Express	1126880
	+ SHUR-TRAK II™	
	SMART3™ Rec - Non-Express - Rear Output	1126928
	SMART3™ Rec Cover w/Gasket - Non-Express	1126881
	PARTS	
2	Solenoid Cover Gasket - 1/8"	1704309
	Solenoid Cover Gasket - 1/4"	1705791
3	Motor-Rev Solenoid 12V - 3 Pt Mnt - Red Wire	1704312

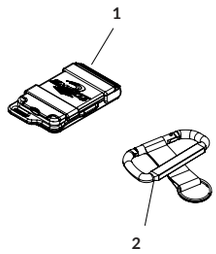

REMOTES

	DESCRIPTION	P/N
1	SMART3™ Remote	1126867
2	Lanyard Ring	1124817

Table of Contents

Replacement Parts

SMART2™ and SMART3™ Discontinued in 2023.

ARM ASSEMBLIES - FRONT

	DESCRIPTION	P/N
	KITS	
	Front Arm Assy [Includes: 2; 3; 7; 8; 14; 17; 18; 19; 20; 21; 23; 25; 26; 27; 32; 34; 2 of 5, 11, 12, 13, 15, 16, 22, 28, 29, 30, 31, 33, 35 & 36; 4 of 4, 9 & 10; 6 of 1; 8 of 6; 10 of 24]	1120760
	Upper Arm Assy - Front [Includes: 3; 7; 8; 14; 17; 18; 19; 20; 21; 23; 2 of 5, 11, 12, 13 & 22; 3 of 9 & 10; 4 of 1, 4, 6 & 24]	1120759
	PARTS	
1	Flange Cap Screw - #10-24 x 1/2"	1704308
2	Chain Guard	1120727
3	Drive Shaft	1120724
4	Nylon Lock Nut - 3/8"	1701580
5	Flange Bearing - 7/8" Hex	1704456
6	Hex Head Cap Screw - 1/2" x 3-1/4"	1704808
7	Chain Guard Filler Panel	1120728
8	Motor Mount Plate	1120720
9	Lock Washer - 5/16"	1700433
10	Hex Head Cap Screw - 5/16" x 3/4"	1701045
11	Drive Shaft Bearing Plate	1120722
12	Flat Washer - 3/8"	1700429
13	Hex Head Cap Screw - 3/8" x 1-1/2"	1701434
14	Sprocket - T30-40 - 7/8" Hex Bore	1120723
15	Flat Washer - Bronze - 1/8" x 1-1/2"	*1704810
16	Lower Arm Hinge Spacer	1120712
17	Upper Hinge	1120718
18	Upper Arm Tube	1120719
19	Square Key - 3/16" x 3/16" x 1-1/4"	1120762
20	Sprocket - T10-40 - 3/4" Bore	1120751
21	Flange Bearing - 3/4"	1704811
22	Hex Head Cap Screw - 3/8" x 1-1/4"	1702891
23	Motor Shaft Support Bracket	1120721
24	Nylon Lock Hex Nut - 1/2"	1702115
25	Roller Chain Assy - 31-3/4"	1120763
26	Chain Connector Link	1701057
27	Front Roll Tube Connector	1120738
28	Wire Clip - 3/4" ID	1702108
29	Self-Drilling Screw - 1/4" x 3/4"	1700398
30	Ring Terminal - 6 Ga. x 1/4" Stud - Motor/Solenoid	*1702707
31	Rubber Insulating Boot	*1704330
32	Coiled Wire - 6 Ga. x 16'8"	1704788
33	Lower Arm Hinge Plate	1120714
34	Lower Arm Tube	1120715
35	Hex Head Cap Screw - 1/2" x 3-1/2"	1700378
36	Pivot Plate	1120716

*These items are NOT shown in the drawing.

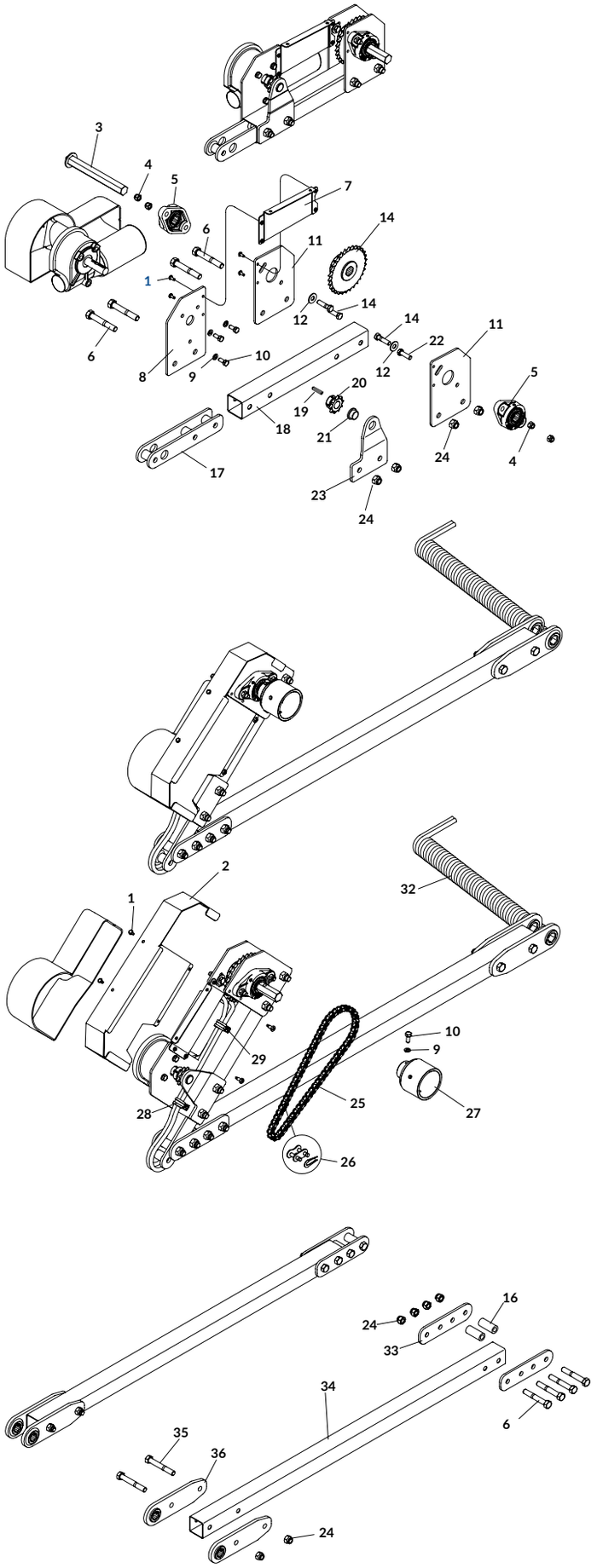

Table of Contents

Replacement Parts

IronSide™ Discontinued in 2017.

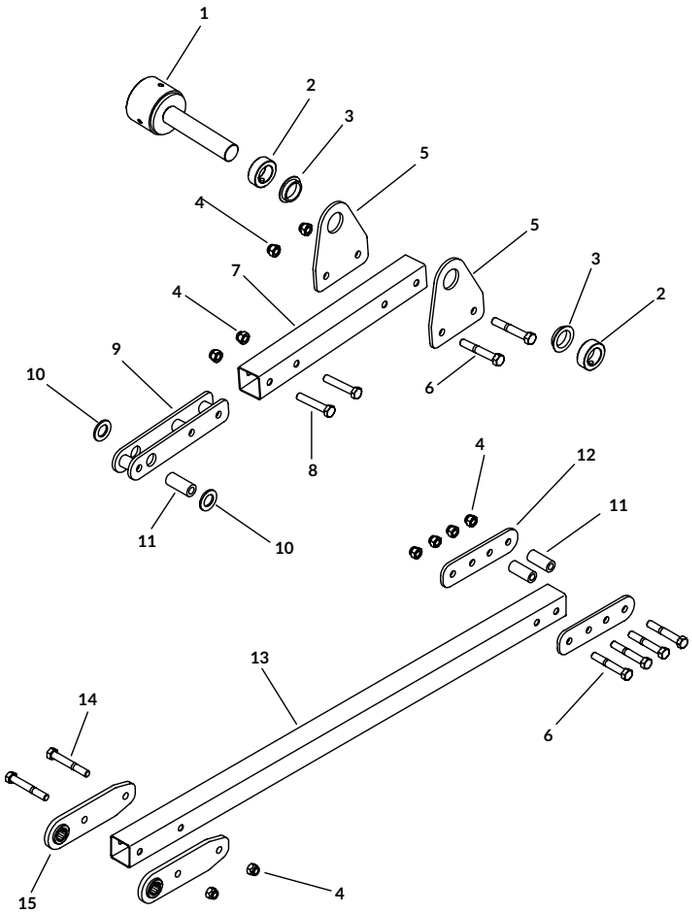

ARM ASSEMBLIES - REAR

	DESCRIPTION	P/N
	KITS	
	Upper Arm Assy - Rear [Includes: 7; 9; 2 of 5, 6 & 8; 4 of 4]	1120758
	Rear Arm Assy [Includes 1; 7; 9; 13; 2 of 2, 3, 5, 6, 8, 10, 11, 12, 14 & 15; 4 of 6; 10 of 4]	1120761
	PARTS	
1	Rear Roll Tube Connector	1120736
2	Locking Collar	1704807
3	Flange Bushing - 1.281" ID x 1.522" OD	1704468
4	Nylon Lock Hex Nut - 1/2"	1702115
5	Idler Shaft Bearing Plate	1120731
6	Hex Head Cap Screw - 1/2" x 3-1/4"	1704808
7	Upper Arm Tube	1120719
8	Hex Head Cap Screw - 1/2" x 2-3/4"	1704809
9	Upper Hinge	1120718
10	Flat Washer - Bronze - 1/8" x 1-1/2"	1704810
11	Lower Arm Hinge Spacer	1120712
12	Lower Arm Hinge Plate	1120714
13	Lower Arm Tube	1120715
14	Hex Head Cap Screw - 1/2" x 3-1/2"	1700378
15	Pivot Plate	1120716

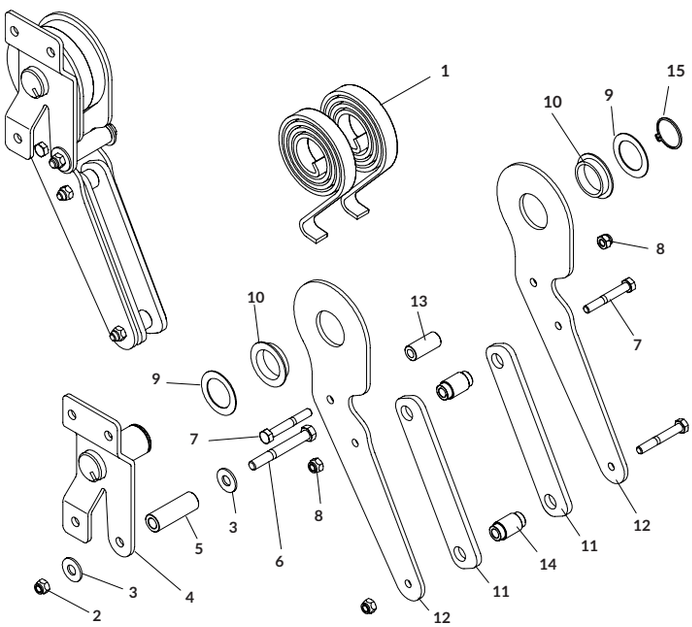

PUSH-OUT ASSEMBLIES - FRONT

	DESCRIPTION	P/N
	KITS	
	Push-Out Assy - Front [Includes 2; 4; 5; 6; 13; 15; 2 of 1, 3, 9, 10, 11, 12, 14; 3 of 7 & 8]	1120755
	PARTS	
1	Spiral Torsion Spring	1111027
2	Nylon Lock Nut - 3/8"	1701580
3	Flat Washer - 3/8"	1700429
4	Push-Out Pivot Weldment - Front	1120746
5	Push-Out Stop Tube	1120752
6	Hex Head Cap Screw - 3/8" x 3"	1700371
7	Hex Head Cap Screw - 5/16" x 2-1/4"	1202899
8	Nylon Lock Hex Nut - 5/16"	1700419
9	Flat Washer - 1-1/4" x 1-7/8"	1702890
10	Flange Bushing - 1.281" ID x 1.522" OD	1704468
11	Push-Out Plate	1120745
12	Push-Out Wear Band	1120754
13	Push-Out Spring Catch	1120753
14	Push-Plate Spacer	1120713
15	Retaining Ring - 1-1/4"	1702888

Table of Contents

Replacement Parts

IronSide™ Discontinued in 2017.

PUSH-OUT ASSEMBLIES - REAR

	DESCRIPTION	P/N
	KITS	
	Push-Out Assy - Rear [Includes 2; 10; 11; 13; 14; 15; 2 of 1, 3, 4, 7, 8, 9, 12; 3 of 5 & 6]	1120756
	PARTS	
1	Spiral Torsion Spring	1111027
2	Retaining Ring - 1-1/4"	1702888
3	Flat Washer - 1-1/4" x 1-7/8"	1702890
4	Flange Bushing - 1.281" ID x 1.522" OD	1704468
5	Nylon Lock Hex Nut - 5/16"	1700419
6	Hex Head Cap Screw - 5/16" x 2-1/4"	1202899
7	Push-Out Plate	1120745
8	Push-Out Wear Band	1120754
9	Push-Plate Spacer	1120713
10	Push-Out Spring Catch	1120753
11	Hex Head Cap Screw - 3/8" x 3"	1700371
12	Flat Washer - 3/8"	1700429
13	Push-Out Stop Tube	1120752
14	Push-Out Pivot Weldment - Rear	1120743
15	Nylon Lock Nut - 3/8"	1701580

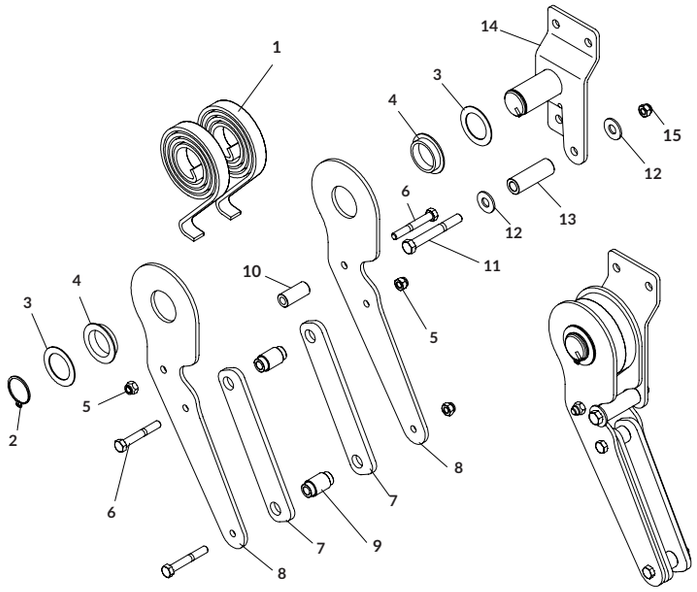

SPRING ASSEMBLIES

	DESCRIPTION	P/N
	KITS	
	Spring Assy - Front [Includes 1; 5; 6; 8; 9; 2 of 2, 3 & 7; 4 of 4]	1120909
	Spring Assy - Rear [Includes 1; 5; 6; 8; 9; 2 of 2, 3 & 7; 4 of 4]	1120910
	PARTS	
1	Locking Collar - 7/8"	1704489
2	Set Screw - 1/4" x 1/4"	1704491
3	Hex Head Cap Screw - 3/8" x 1-3/4"	1700369
4	Flat Washer - 3/8"	1700429
5	Flange Bearing - 7/8" Hex	1704456
6	Spring Retainer Weldment	1118955
7	Nylon Lock Nut - 3/8"	1701580
8	Spring Shaft	1120735
9	Torsion Spring 15-Coil - L	1704476
	Torsion Spring 15-Coil - R	1704477

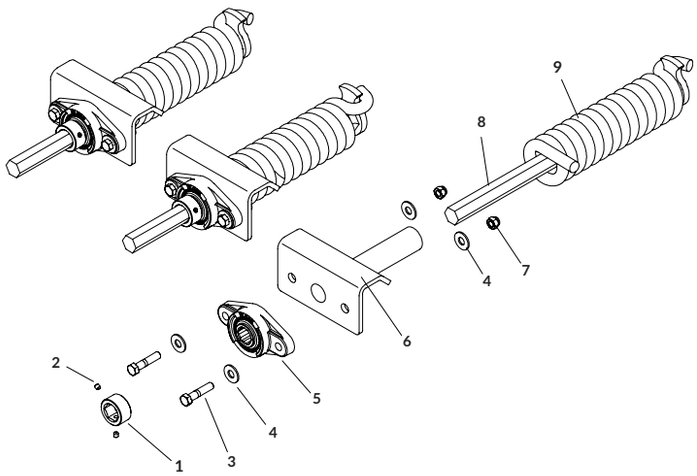

TARP CRADLE

	DESCRIPTION	P/N
	PARTS	
1	Tarp Cradle Extension	1121980
2	Tarp Cradle	1120748
3	Tarp Cradle Gusset	1121979
4	Tarp Retainer Hook	1120740
5	Nylon Lock Nut - 3/8"	1701580
6	Fixed Tube Clamp	1120732
7	Fixed Tube Anchor	1120733
8	Fixed Tube Clamp - Reinforced	1122995

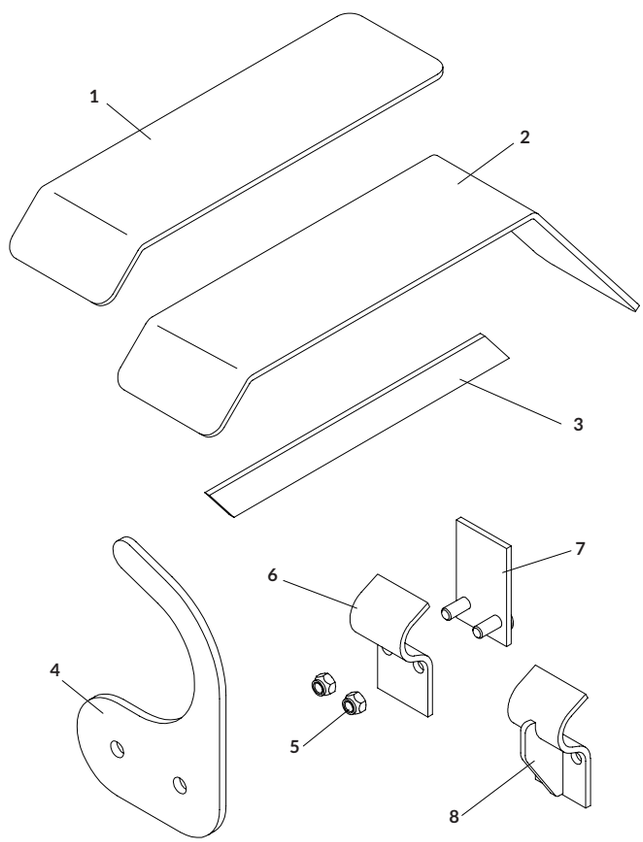

Table of Contents

Replacement Parts

IronSide™ Discontinued in 2017.

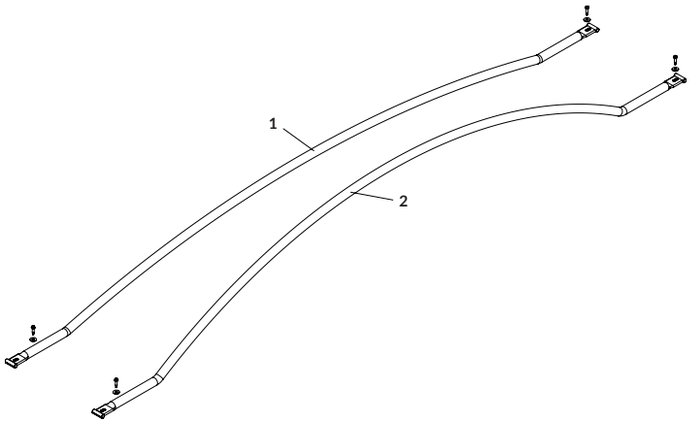

BOW ASSEMBLIES

	DESCRIPTION	P/N
	KITS & HARDWARE	
1	Bow Kit - 6" Rise - 92"	1110740
	Bow Kit - 6" Rise - 96"	1110759
	Bow Kit - 6" Rise - 102"	1110778
2	Bow Kit - 12" Rise - 92"	1110797
	Bow Kit - 12" Rise - 96"	1110816
	Bow Kit - 12" Rise - 102"	1110835

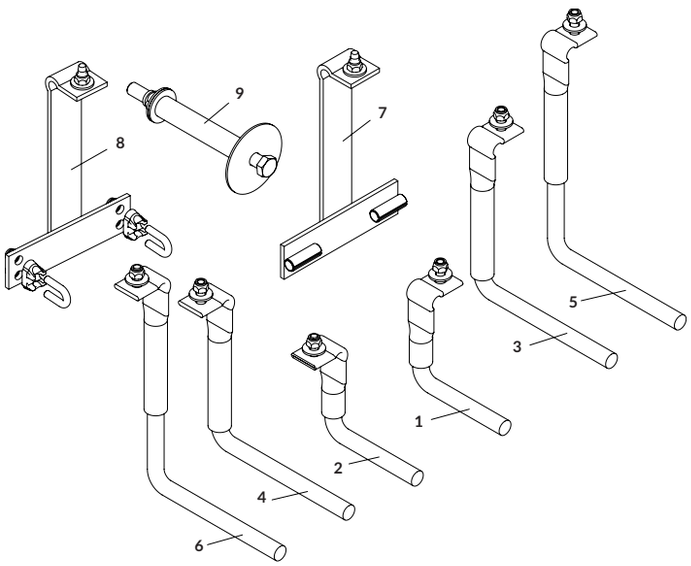

BOW SHANKS | WINDGUARDS

	DESCRIPTION	P/N
	PARTS	
1	Windguard Assy - 4" - L	1109253
2	Windguard Assy - 4" - R	1109254
3	Windguard Assy - 6" - L	1109251
4	Windguard Assy - 6" - R	1109252
5	Windguard Assy - 8" - L	1111061
6	Windguard Assy - 8" - R	1111062
7	High Lift Windguard Assy - Sliding	1111605
8	High Lift Windguard Assy - Fixed Bow	1111606
9	Windguard Anchor Assy	1109086

COVER-PRO®

PULLEY-TO-PULLEY	BOW QTY	MESH	18 oz vinyl
Up to 10'6"	4		
10'7" to 13'	5		
13'1" to 15'6"	6		
15'7" to 18'	7		
18'1" to 20'6"	8		
20'7" to 23'	9		
23'-1" to 25'6"	10		
25'7" to 28'	11		
28'1" to 30'6"	12		
30'7" to 33'	13		
33'1" to 35'6"	14		
35'7" to 38'	15		
38'1" to 40'6"	16		
40'7" to 43'	17		

Table of Contents

Replacement Parts

Cover-Pro® Discontinued in 2001.

BOW ASSEMBLIES

	DESCRIPTION	P/N
	KITS & HARDWARE	
1	Bow Kit - Flat - 92"	1116089
	Bow Kit - Flat - 96"	1116093
	Bow Kit - Flat - 102"	1116097
2	Bow Kit - 6" Rise - 92"	1116086
	Bow Kit - 6" Rise - 96"	1116090
	Bow Kit - 6" Rise - 102"	1116094
3	Bow Kit - 12" Rise - 92"	1116087
	Bow Kit - 12" Rise - 96"	1116091
	Bow Kit - 12" Rise - 102"	1116095
4	Bow Kit - 18" Rise - 92"	1116088
	Bow Kit - 18" Rise - 96"	1116092
	Bow Kit - 18" Rise - 102"	1116096
	PARTS	
5	Screw/Rubber Washer Set - 3/4"	1701520
6	Flat Washer - 1/4"	1700427
7	Self-Drilling Screw - #12 x 1"	1701471

NOTE: Hardware included with all kits.

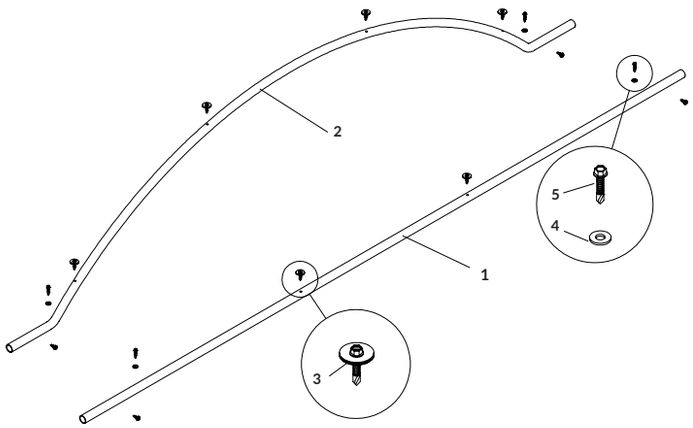

BOW SHANKS | WINDGUARDS

	DESCRIPTION	P/N
	KITS	
	Twist-Lok™ Windguard Shank Kit [Includes 7; 9; 17; 20; 21; 22]	1115529
	Twist-Lok™ Fixed Rear Shank Kit [Includes 7; 8; 9; 17; 20; 21; 22; 2 of 15]	1115543
	Twist-Lok™ Windguard/Shank Kit - 4" - L [Includes 1; 7; 9; 17; 20; 21; 22]	1116146
	Twist-Lok™ Windguard/Shank Kit - 4" - R [Includes 2; 7; 9; 17; 20; 21; 22]	1116147
	Twist-Lok™ Windguard/Shank Kit - 6" - L [Includes 3; 7; 9; 17; 20; 21; 22]	1116144
	Twist-Lok™ Windguard/Shank Kit - 6" - R [Includes 4; 7; 9; 17; 20; 21; 22]	1116145
	Twist-Lok™ Windguard/Shank Kit - 8" - L [Includes 5; 7; 9; 17; 20; 21; 22]	1116142
	Twist-Lok™ Windguard/Shank Kit - 8" - R [Includes 6; 7; 9; 17; 20; 21; 22]	1116143
	Twist-Lok™ Intermediate Shank Kit [Includes 7; 18]	1116141
	High-Lift Fixed Rear Shank Kit [Includes 9; 13; 17; 18; 2 of 15]	1115532
	High-Lift Intermediate Shank Kit [Includes 9; 14; 17; 18]	1115533
	Windguard Anchor Kit [Includes 10; 11; 12; 16; 19; 2 of 17]	1115536
	Front Bow Stop Kit [Includes: 25; 2 of 17]	1110387
	Bridge Plate Kit [Includes: 23; 2 of 24]	1110395
	PARTS	
1	Hook Windguard - 4" - L	1115468
2	Hook Windguard - 4" - R	1115467
3	Hook Windguard - 6" - L	1115470
4	Hook Windguard - 6" - R	1115469
5	Hook Windguard - 8" - L	1115472
6	Hook Windguard - 8" - R	1115471
7	Twist-Lok™ Bow Shank	1114019
8	Fixed Bow Shank Reinforcement	1115491
9	Bow Reinforcement Tube - 6-1/2"	1115490
10	Windguard Anchor	1115466
11	Windguard Catch Tube	1115492
12	Windguard Anchor Washer	1109393
13	High-Lift Windguard - Fixed	1115476
14	High-Lift Windguard - Sliding	1115475
15	Cable Clamp	1701441
16	Hex Head Cap Screw - 1/2" x 5"	1702113
17	Self-Tapping Screw - 3/8" x 1"	1700400
18	Self-Drilling Screw - 1/4" x 3/4"	1700398
19	Lock Washer - 1/2"	1700437
20	Pan Head Cap Screw - 1/4" x 2 1/4"	1703430
21	Nylon Lock Hex Nut - 1/4"	1701543
22	Flat Washer - 1/4"	1700427
23	Bridge Plate	1108080
24	Self-Drilling Screw - #12 x 1"	1701471
25	Bow Stop	1109151

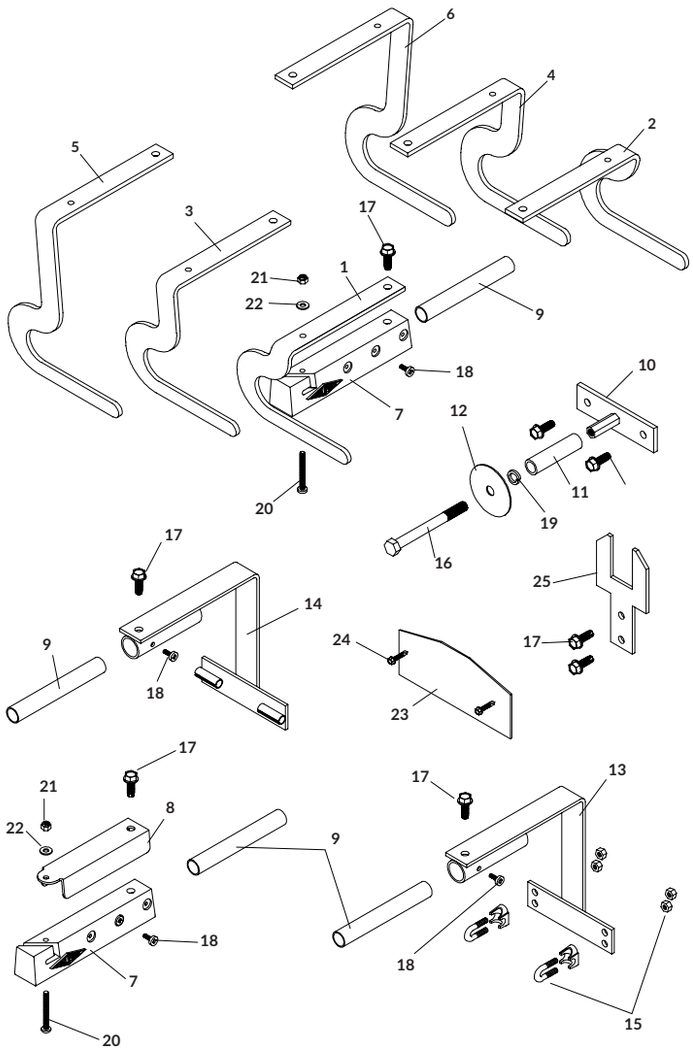

Table of Contents

Replacement Parts

Cover-Pro® II Discontinued in 2017.

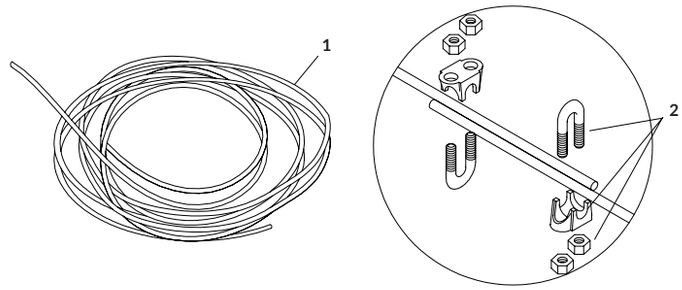

CABLE ASSEMBLIES

	DESCRIPTION	P/N
	PARTS	
1	Galv Steel Cable (per foot)	1701464
	Stainless Steel Cable (per foot)	1702568
2	Cable Clamp	1701441

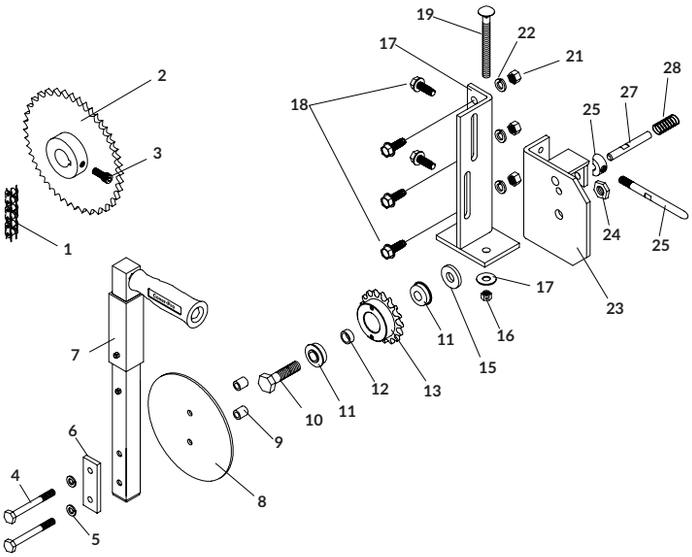

CRANK DRIVES

	DESCRIPTION	P/N
	KITS	
	Manual Crank Chain Drive Kit [Includes: 1; 2; 3; 6; 7; 8; 9; 10; 12; 13; 15; 16; 17; 18; 20; 23; 24; 25; 26; 27; 28; 2 of 4, 5 & 11; 3 of 21 & 22; 5 of 19]	1109420
	Sprocket Kit w/Bearing [Includes: 10; 12; 13; 15; 24; 2 of 11]	1110654
	Pulley Kit w/Bearings [Includes: 10; 14; 15; 24; 2 of 11]	1110646
	PARTS	
1	Roller Chain Assy - 14'	1109179
2	Sprocket - 42 Tooth	1702098
3	Soc Head Cap Screw - 5/16" x 1-1/2"	1701493
4	Hex Head Cap Screw - 5/16" x 3"	1702629
5	Lock Washer - 5/16"	1700433
6	Handle Stiffener	1108909
7	Crank Handle	1108929
8	Crank Guard	1110159
9	Guard Spacer	1108917
10	Hex Head Cap Screw - 1/2" x 2"	1701042
11	Flange Bearing - 1-1/8" OD x 1/2" Bore	1702627
12	Sprocket Spacer	1110648
13	Sprocket	1110640
14	Pulley Spacer	*1110649
15	Flat Washer - 1/2"	1701269
16	Centerlock Hex Nut - 3/8"	1700418
17	Flat Washer - 3/8"	1700429
18	Crank Mtg Bracket	1108924
19	Self-Tapping Screw - 3/8" x 1"	1700400
20	Carriage Bolt - 3/8" x 4" - GR5	1702080
21	Hex Nut - 3/8"	1700407
22	Lock Washer - 3/8"	1700434
23	Crank Adjustable Bracket	1108925
24	Nylon Lock Hex Nut - 1/2"	1701145
25	Manual Locking Pin	1108918
26	Crank Cam Lobe	1108921
27	Locking Pin - 3/8 x 2-13/16"	1108919
28	Compression Spring - 1-1/4"	1702084

*These items are NOT shown in the drawing.

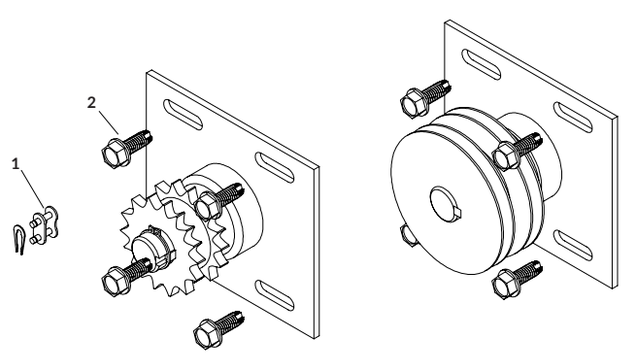

DOUBLE IDLERS

	DESCRIPTION	P/N
	KITS	
	Double Idler w/Chain Kit [Includes: 1; 2; 3; 6; 7; 8; 9; 10; 12; 13; 15; 16; 17; 18; 20; 23; 24; 25; 26; 27; 28; 2 of 4, 5 & 11; 3 of 21 & 22; 5 of 19]	1110072
	PARTS	
1	Chain Connector Link [Includes: 10: 12; 13; 15; 24; 2 of 11]	1701057
2	Self-Tapping Screw - 3/8" x 1" [Includes: 10: 14; 15; 24; 2 of 11]	1700400

Table of Contents

Replacement Parts

Cover-Pro® II Discontinued in 2017.

ELECTRIC DRIVE OPTIONS

	DESCRIPTION	P/N
	PARTS	
1	Durabuilt™ Motor w/Cover - 2-1/8" Shaft	1121307
2	Lock Washer - 5/16"	1700433
3	Top Lock Hex Nut - 5/16"	1702492
4	Hex Head Cap Screw - 5/16" x 1-3/4"	1701468
5	Self-Drilling Screw - 1/4" x 3/4"	1700398
6	Motor Mount Cover Plate	1109443
7	Motor Mount	1109452
8	Self-Tapping Screw - 3/8" x 1"	1700400
9	Flat Washer - 3/8"	1700429
10	Hex Nut - 3/8"	1700407
11	Motor Mount Base Plate	1109449
12	Motor Mount Shim	1109444
13	Roller Chain Assy - 22-3/4"	1109456
14	Chain Connector Link	1701057
15	Sprocket - T18-40 - 1" Bore	1106619
16	Soc Head Cap Screw - 5/16" x 1-1/2"	1701493
17	Carriage Bolt - 5/16" x 1" - GR2	1701522
18	Bearing Flange - 52MM - 2 Bolt	1701054
19	Radial Ball Bearing - 1.003" ID x 2-3/64" OD	1705450
20	Square Key - 1/4" x 1/4" x 1-3/8"	1701056
21	Motor Mount Shaft	1109445
22	Hex Nut - 5/16"	1700411
23	Flat Washer - 5/16"	1700428
24	HD Electric Motor	1122442
25	Flange Cap Screw - #10-24 x 1/2"	1704308
26	Motor Cover Cap	1122565
27	HD Motor Cover	1122564
28	HD Motor Mount Bracket	1122559
29	Sprocket Cover	1122566
30	Roller Chain Assy - 23-3/4"	1122562
31	Sprocket - T18-40 - 3/4" Bore	1122377

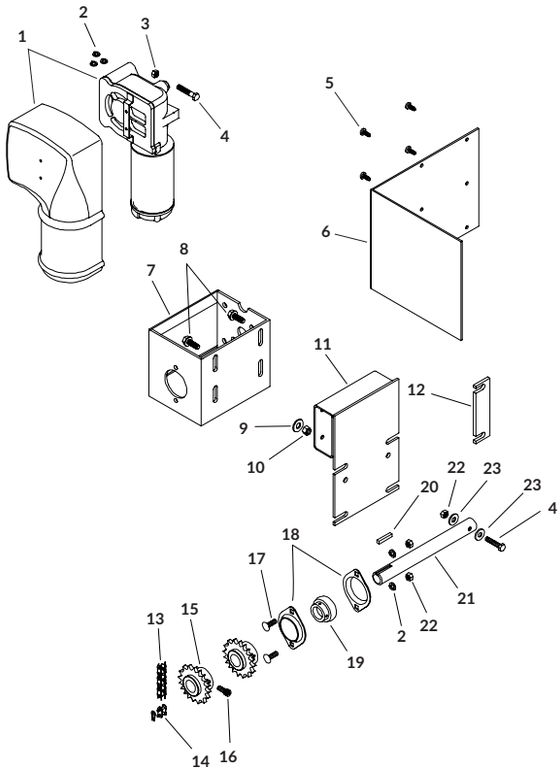

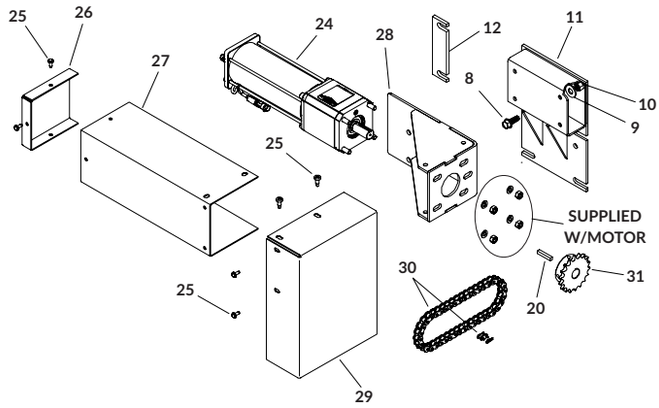

WINDSHIELDS

	DESCRIPTION	P/N
	PARTS	
1	Windshield - 92"	1110150
	Windshield - 96"	1110151
	Windshield - 102"	1110152
2	Self-Drilling Screw - 1/4" x 3/4"	1700398

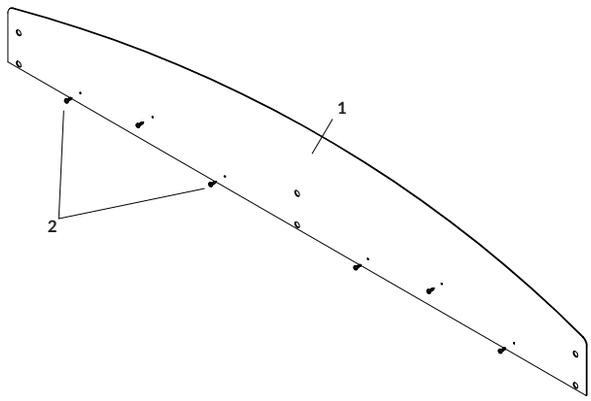

Table of Contents

Replacement Parts

Cover-Pro® II Discontinued in 2017.

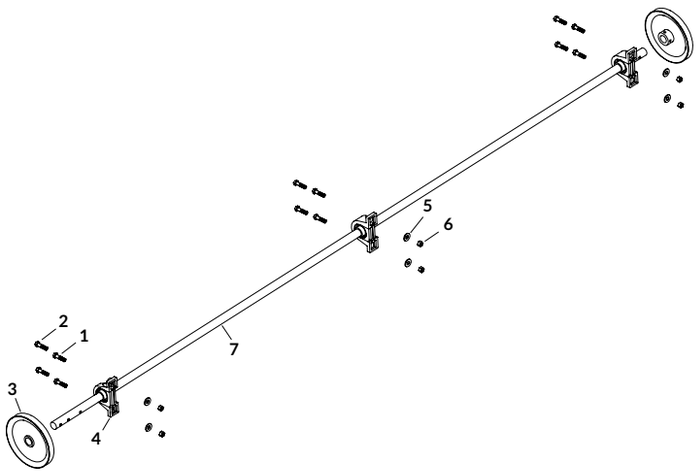

FRONT DRIVES

	DESCRIPTION	P/N
	KITS	
	Front Drive Kit - 92" Series [Includes: 7; 2 of 3; 3 of 4; 6 of 1, 2, 5 & 6]	1110917
	Front Drive Kit - 96" Series [Includes: 7; 2 of 3; 3 of 4; 6 of 1, 2, 5 & 6]	1110918
	Front Drive Kit - 102" Series [Includes: 7; 2 of 3; 3 of 4; 6 of 1, 2, 5 & 6]	1110919
	PARTS	
1	Hex Head Cap Screw - 3/8" x 1-1/2"	1701434
2	Self-Tapping Screw - 3/8" x 1"	1700400
3	Pulley w/Hub - 7"	1702096
4	Greasable Pillow Block Bearing - 1"	1702095
5	Flat Washer - 3/8" - SAE	1701176
6	Centerlock Hex Nut - 3/8"	1700418
7	Head Shaft - 92" Series	1109305
	Head Shaft - 96" Series	1109304
	Head Shaft - 102" Series	1109303

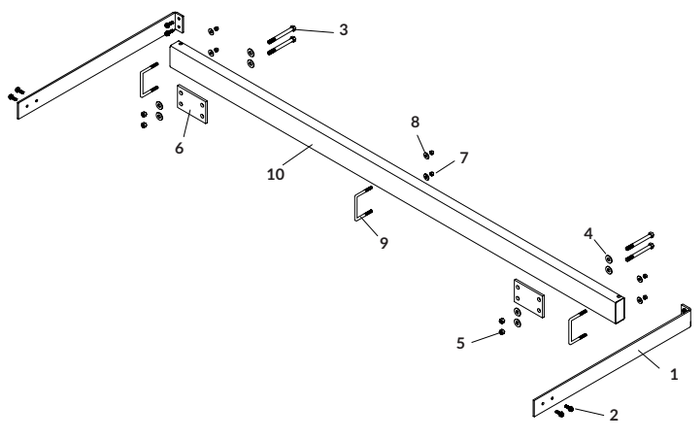

MOUNTING TUBES

	DESCRIPTION	P/N
	KITS	
	Mounting Tube Kit - 92" Series [Includes 10; 2 of 1 & 6; 3 of 9; 4 of 3 & 5; 6 of 7 & 8; 8 of 2 & 4]	1109386
	Mounting Tube Kit - 96" Series [Includes 10; 2 of 1 & 6; 3 of 9; 4 of 3 & 5; 6 of 7 & 8; 8 of 2 & 4]	1109008
	Mounting Tube Kit - 102" Series [Includes 10; 2 of 1 & 6; 3 of 9; 4 of 3 & 5; 6 of 7 & 8; 8 of 2 & 4]	1109389
	PARTS	
1	Mounting Tube Brace	1109009
2	Self-Tapping Screw - 3/8" x 1"	1700400
3	Hex Head Cap Screw - 1/2" x 5"	1702113
4	Flat Washer - 1/2"	1702114
5	Nylon Lock Hex Nut - 1/2"	1702115
6	Mounting Tube Spacer	1702450
7	Nylon Lock Nut - 3/8"	1701580
8	Flat Washer - 3/8" - SAE	1701176
9	Square Bend U-Bolt - 3/8"	1701532
10	Mounting Tube - 92" Series	1109307
	Mounting Tube - 96" Series	1109007
	Mounting Tube - 102" Series	1109306

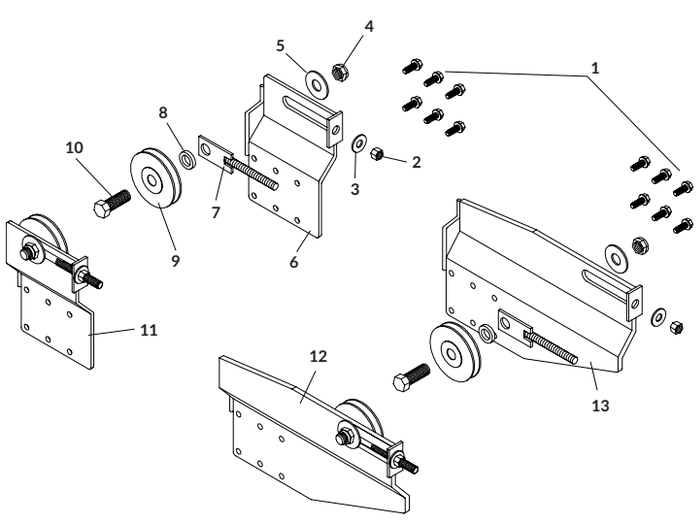

REAR PULLEYS

	DESCRIPTION	P/N
	KITS	
	Rear Pulley Kit - R [Includes: 2; 3; 4; 5; 6; 7; 8; 9; 10; 6 of 1]	1111023
	Rear Pulley Kit - L [Includes: 2; 3; 4; 5; 7; 8; 9; 10; 11; 6 of 1]	1111024
	Extended Rear Pulley Kit - R [Includes: 2; 3; 4; 5; 7; 8; 9; 10; 13; 6 of 1]	1110655
	Extended Rear Pulley Kit - L [Includes: 2; 3; 4; 5; 7; 8; 9; 10; 12; 6 of 1]	1110737
	PARTS	
1	Self-Tapping Screw - 3/8" x 1"	1700400
2	Nylon Lock Hex Nut - 1/2"	1702115
3	Flat Washer - 1/2"	1701269
4	Nylon Lock Hex Nut - 3/4"	1702123
5	Flat Washer - 3/4"	1701039
6	Rear Pulley Bracket - R	1109013
7	Rear Pulley Take-Up	1109012
8	Spacer - 1-1/4"	1702468
9	Pulley - 4"	1702099
10	Hex Head Cap Screw - 3/4" x 2"	1701581
11	Rear Pulley Bracket - L	1109014
12	Extended Rear Pulley Bracket - L	1109069
13	Extended Rear Pulley Bracket - R	1109065

Table of Contents

Replacement Parts

Cover-Pro® II Discontinued in 2017.

TARP TUBES

	DESCRIPTION	P/N
	KITS	
	Tarp Tube Kit - 92" Series [Includes: 2; 2 of 3, 5 & 6; 5 of 1; 10 of 4]	1109422
	Tarp Tube Kit - 96" Series [Includes: 2; 2 of 3, 5 & 6; 5 of 1; 10 of 4]	1109284
	Tarp Tube Kit - 102" Series [Includes: 2; 2 of 3, 5 & 6; 5 of 1; 10 of 4]	1109425
	PARTS	
1	Flat-Headed Self-Drilling Screw - 1/4" x 3/4"	1704768
2	Tarp Hold-Down Tube - 92" Series	1109296
	Tarp Hold-Down Tube - 96" Series	1109294
	Tarp Hold-Down Tube - 102" Series	1109295
3	Nylon Lock Hex Nut - 1/2"	1702115
4	Flat Washer - 1/2"	1702114
5	Self-Locking Retaining Ring - 1/2"	1703969
6	Hex Head Cap Screw - 1/2" x 7"	1702118

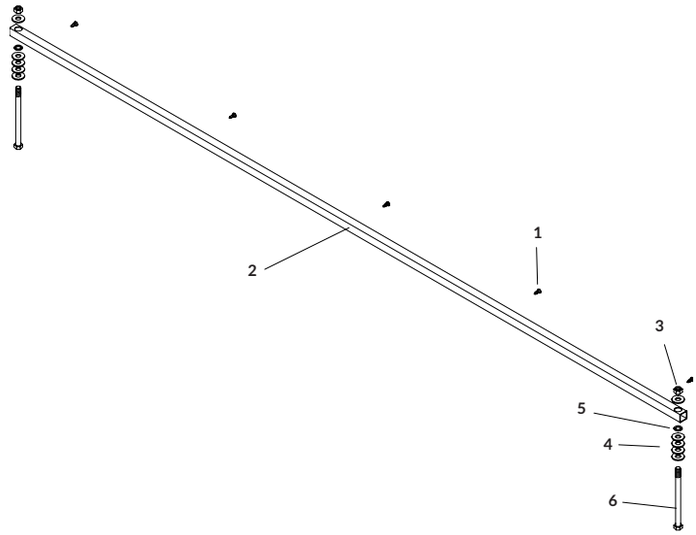

COVER-PRO® II TARPS

For pricing on Cover-Pro II™ tarps see Shur-Trak™ ShortStop™ replacement tarp chart.

Table of Contents

Replacement Parts

Cover-Pro® II Discontinued in 2017.

BOX DETAILS | ORDER FORMS

BOX DETAIL SHEET FOR END DUMPS

ALL TARPS ARE CUSTOM-MADE TO ORDER AND ARE NON-RETURNABLE. CORRECT PHYSICAL MEASUREMENTS ARE ESSENTIAL FOR PROPER TARP FIT. PROVIDE ALL REQUESTED INFORMATION OR YOUR ORDER MAY BE DELAYED. **DO NOT** USE UNIVERSAL BOX SIZES. **ALWAYS** USE ACTUAL MEASUREMENTS. BOX SIZE AND FINISHED TARP SIZE ARE **NOT** THE SAME.

CONTACT INFORMATION

G004BD-1019

NAME _____

ADDRESS _____

EMAIL _____

CITY _____ STATE _____ ZIP _____

PHONE _____ FAX _____

BOX/TRAILER MAKE _____

BOX DIMENSIONS

A _____ UPPER BOX LENGTH

B _____ UPPER BOX WIDTH

Front_____Center_____Rear_____

N _____ TOP RAIL WIDTH

U _____ INSIDE BOX WIDTH

X _____ BOX HEIGHT

CORNER CONFIGURATION *Must select one — see Figure 1*

SQUARE DIAGONAL RADIUS/NO RECESS

SQUARE RECESS DIAGONAL RECESS

C _____ OUTSIDE CORNER RADIUS *Needed for ALL radius fronts*

D _____ RECESSED WIDTH **E** _____ FLAT ACROSS FRONT

F _____ FRONT-CORNER POST **G** _____ GUSSET LENGTH

V _____ FLAT ACROSS DIAG. **W** _____ DIAGONAL DEPTH

TARP RAIL STYLE *See Figure 2*

SQUARE SELF CLEANING SQUARE W/PLANKS*

*Are planks flush with outside of top rail? Y / N *(Circle one)*

TARP RAIL DROP *See Figure 3* FRONT REAR

L _____ BULKHEAD DEPTH **O1** _____ FRONT TOP RAIL DROP

M _____ THRESHOLD DEPTH **O2** _____ REAR TOP RAIL DROP

FRONT END STYLE *See Figure 4*

RAISED FRONT SHIELD RAISED SHIELD/FLAT TOP RAIL

SLANT W/CURVED RAISED FRONT SLANT W/SQUARE RAISED FRONT

SQUARE TUB W/INVERTED RAM

AD _____ CYLINDER HEIGHT **J** _____ UPPER SHIELD WIDTH

AE_____ DOGHOUSE DEPTH **J1** _____ DOGHOUSE WIDTH

H _____ SHIELD HEIGHT **K** _____ LOWER SHIELD WIDTH

REAR DUMP STYLE *See Figure 5*

OVERSLUNG HINGE GATE COMBO DOOR HINGE GATE

HIGH POWER LIFT GATE RAISED HINGE GATE

AF _____ HINGE DEPTH **AK** _____ HINGE HEIGHT

B _____ BOX WIDTH/REAR

TARP WEIGHT

18 OZ. 22 OZ. MESH

TARP COLOR(S) _____

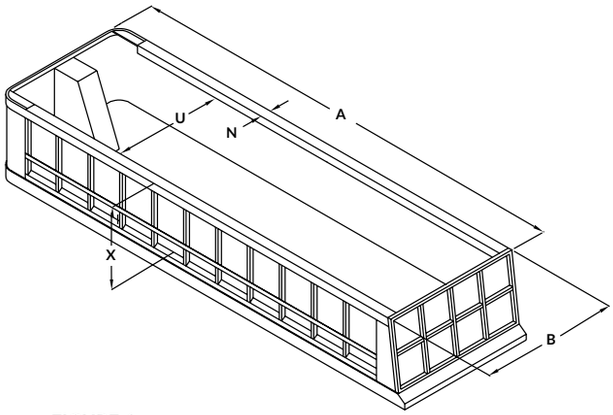

FIGURE 1

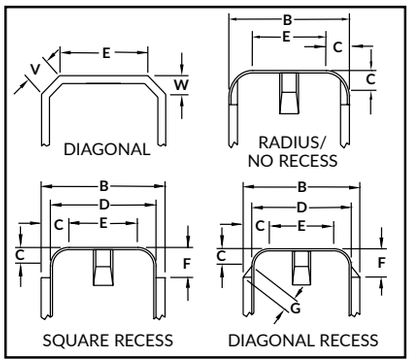

FIGURE 2

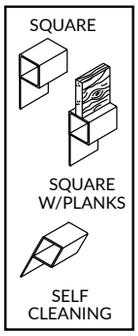

FIGURE 3

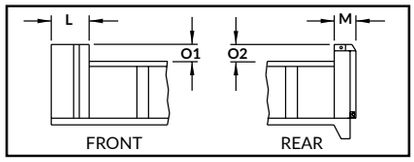

FIGURE 4

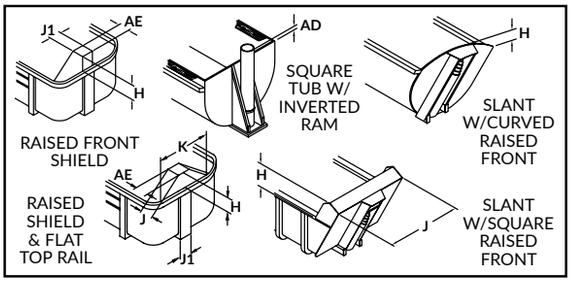

FIGURE 5

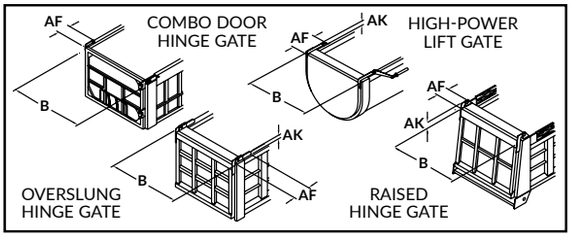

Fax 605.665.0501

Salesperson _____

BOX DETAIL SHEET FOR DUMP BODIES

ALL TARPS ARE CUSTOM-MADE TO ORDER AND ARE NON-RETURNABLE. CORRECT PHYSICAL MEASUREMENTS ARE ESSENTIAL FOR PROPER TARP FIT. PROVIDE ALL REQUESTED INFORMATION OR YOUR ORDER MAY BE DELAYED. **DO NOT** USE UNIVERSAL BOX SIZES. **ALWAYS** USE ACTUAL MEASUREMENTS. BOX SIZE AND FINISHED TARP SIZE ARE **NOT** THE SAME.

CONTACT INFORMATION

G008BD-0618

NAME _____

ADDRESS _____

EMAIL _____

CITY _____ STATE _____ ZIP _____

PHONE _____ FAX _____

BOX/TRAILER MAKE _____

BOX DIMENSIONS

A _____ UPPER BOX LENGTH

B _____ UPPER BOX WIDTH Front _____ Center _____ Rear _____

H _____ SHIELD HEIGHT **J** _____ UPPER SHIELD WIDTH

K _____ LOWER SHIELD WIDTH **N** _____ TOP RAIL WIDTH

U _____ INSIDE BOX WIDTH **X** _____ BOX HEIGHT

U1 _____ PLANK-TO-PLANK WIDTH

CORNER CONFIGURATION *Must select one – see Figure 1*

SQUARE DIAGONAL RADIUS

C _____ OUTSIDE CORNER RADIUS | *For all radius fronts*

E _____ FLAT ACROSS FRONT

V _____ FLAT ACROSS DIAGONAL

W _____ DIAGONAL DEPTH

TARP RAIL STYLE *See Figure 2*

SQUARE SELF CLEANING SQUARE W/PLANKS*

*Are planks flush with outside of top rail? Y / N *(Circle one)*

CAB SHIELD STYLE *See Figures 3 and 4*

FLAT RAISED WITHOUT CAB SHIELD

A _____ UPPER BOX LENGTH **AJ** _____ CAB GUARD DEPTH

AC _____ REAR BOW DEPTH **Z** _____ CAB GUARD HEIGHT

O _____ TOP RAIL DROP Front _____ Rear _____

FRONT BODY STYLE *See Figure 5*

1-SIDE/CUT-OUT SHIELD 3/4 RAISED SHIELD

TAPERED CAB SHIELD FULL CAB SHIELD

AG _____ CAB GUARD WIDTH **H** _____ SHIELD HEIGHT

AH _____ INSIDE CAB GUARD WIDTH

AJ _____ CAB GUARD DEPTH **J** _____ UPPER SHIELD WIDTH

B _____ UPPER BOX WIDTH **Z** _____ CAB GUARD HEIGHT

REAR DUMP STYLE *See Figure 6*

OVERSLUNG HINGE GATE COMBO DOOR HINGE GATE

HIGH POWER LIFT GATE RAISED HINGE GATE

AF _____ HINGE DEPTH **AK** _____ HINGE HEIGHT

B _____ BOX WIDTH/REAR

TARP WEIGHT TARP COLOR(S) _____

18 OZ. 22 OZ. MESH

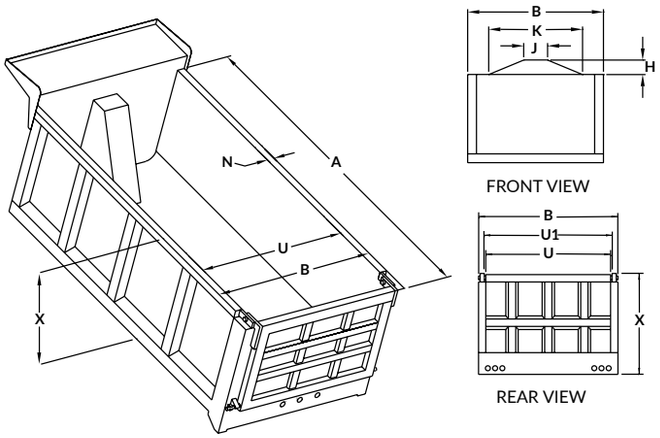

FIGURE 1

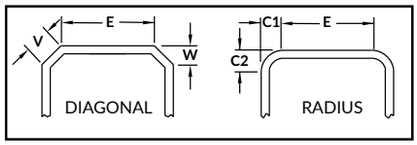

FIGURE 2

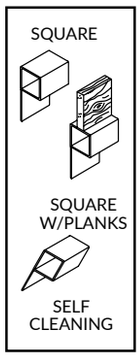

FIGURE 3

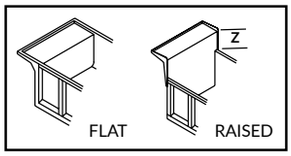

FIGURE 4

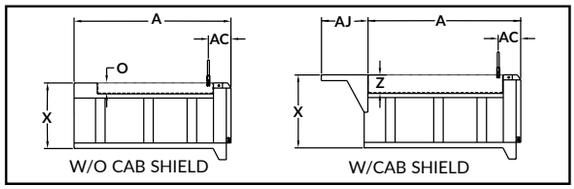

FIGURE 5

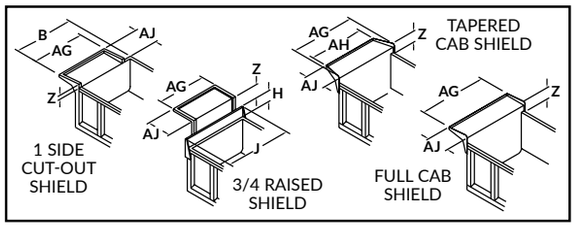

FIGURE 6

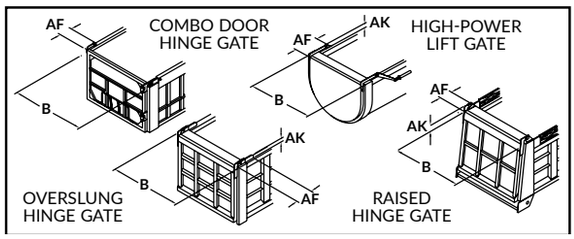

Fax 605.665.0501

Salesperson _____

BOX DETAIL SHEET FOR BELLY DUMPS AND OPEN-TOP VANS

ALL TARPS ARE CUSTOM-MADE TO ORDER AND ARE NON-RETURNABLE. CORRECT PHYSICAL MEASUREMENTS ARE ESSENTIAL FOR PROPER TARP FIT. PROVIDE ALL REQUESTED INFORMATION OR YOUR ORDER MAY BE DELAYED. **DO NOT** USE UNIVERSAL BOX SIZES. **ALWAYS** USE ACTUAL MEASUREMENTS. BOX SIZE AND FINISHED TARP SIZE ARE **NOT** THE SAME.

CONTACT INFORMATION

G009BD-0519

NAME _____

ADDRESS _____

EMAIL _____

CITY _____ STATE _____ ZIP _____

PHONE _____ FAX _____

BOX/TRAILER MAKE _____

BOX DIMENSIONS FOR BELLY DUMPS

A _____ UPPER BOX LENGTH

B _____ UPPER BOX WIDTH

Front _____ Center _____ Rear _____

N _____ TOP RAIL WIDTH

U _____ INSIDE BOX WIDTH

U1 _____ INSIDE PLANK-TO-PLANK WIDTH

X _____ BOX HEIGHT

NOTE: If belly dump is rounded, Shur-Lok® will NOT fit. Same goes for a box tapered at bottom for brackets for arms. In either case, MUST switch to Shur-Matic™ system instead. For questions, call 800.474.8756.

TARP RAIL STYLE *See Figure 1*

SQUARE SELF CLEANING SQUARE W/PLANKS*

*Are planks flush with outside of top rail? Y / N *(Circle one)*

LANDING EXTENSION LENGTH *See Figure 2 – for Shur-Trak™ only*

AJ _____

TARP COLOR(S) _____

BOX DIMENSIONS FOR OPEN-TOP VANS

A _____ UPPER BOX LENGTH

B _____ UPPER BOX WIDTH

Front _____ Center _____ Rear _____

N _____ TOP RAIL WIDTH

U _____ INSIDE BOX WIDTH

X _____ BOX HEIGHT

CORNER CONFIGURATION *See Figure 3*

SQUARE DIAGONAL RADIUS

C _____ OUTSIDE CORNER RADIUS *For all radius fronts*

E _____ FLAT ACROSS FRONT

V _____ FLAT ACROSS DIAGONAL

W _____ DIAGONAL DEPTH

TARP WEIGHT

18 OZ. 22 OZ. MESH

TARP COLOR(S) _____

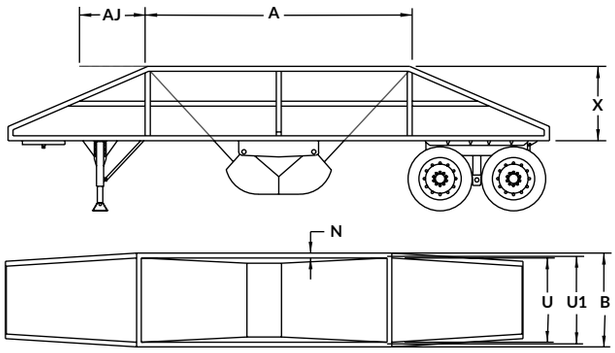

FIGURE 1

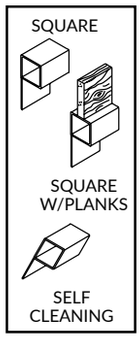

FIGURE 2

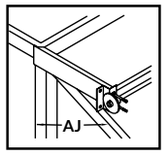

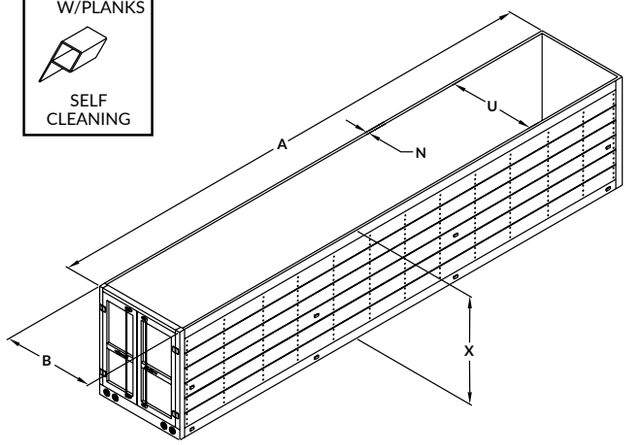

FIGURE 3

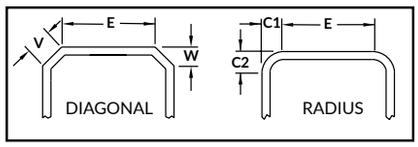

To measure radius corners correctly, place a carpenter's square on the front radius of the trailer. Measure at the point where the radius starts to arch around the front of the trailer.

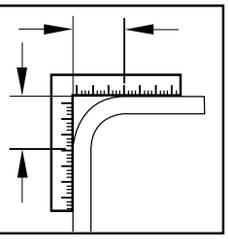

Fax 605.665.0501

Salesperson _____

BOX DETAIL SHEET FOR SIDE DUMPS

ALL TARPS ARE CUSTOM-MADE TO ORDER AND ARE NON-RETURNABLE. CORRECT PHYSICAL MEASUREMENTS ARE ESSENTIAL FOR PROPER TARP FIT. PROVIDE ALL REQUESTED INFORMATION OR YOUR ORDER MAY BE DELAYED. **DO NOT** USE UNIVERSAL BOX SIZES. **ALWAYS** USE ACTUAL MEASUREMENTS. BOX SIZE AND FINISHED TARP SIZE ARE **NOT** THE SAME.

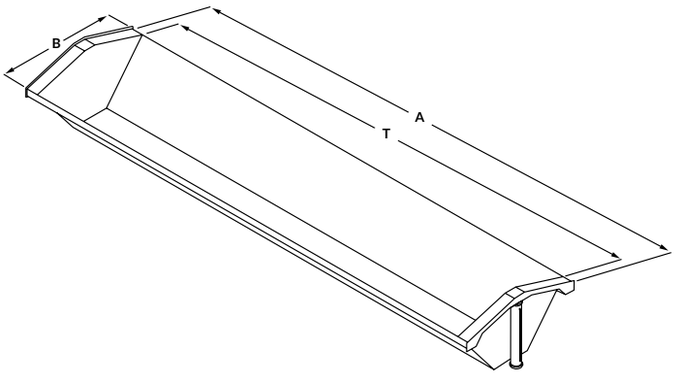

CONTACT INFORMATION

G010BD-0618

NAME _____

ADDRESS _____

EMAIL _____

CITY _____ STATE _____ ZIP _____

PHONE _____ FAX _____

BOX DIMENSIONS

LEAD TRAILER

MAKE _____ YEAR _____

A _____ UPPER OUTSIDE BOX LENGTH

B _____ UPPER OUTSIDE BOX WIDTH

T _____ INSIDE BOX LENGTH

PUP TRAILER

MAKE _____ YEAR _____

A _____ UPPER OUTSIDE BOX LENGTH

B _____ UPPER OUTSIDE BOX WIDTH

T _____ INSIDE BOX LENGTH

DISTANCE FROM FRONT OF PUP TO BATTERY _____

TARP LENGTH

4 FT. 35 FT. 36 FT. OTHER _____

TARP FABRIC/COLOR: Available in Black Mesh Only

Fax 605.665.0501

Salesperson _____

BOX DETAIL SHEET FOR CABLE-LOK™ FOR BELLY DUMPS

ALL TARPS ARE CUSTOM-MADE TO ORDER AND ARE NON-RETURNABLE. CORRECT PHYSICAL MEASUREMENTS ARE ESSENTIAL FOR PROPER TARP FIT. PROVIDE ALL REQUESTED INFORMATION OR YOUR ORDER MAY BE DELAYED. **DO NOT** USE UNIVERSAL BOX SIZES. **ALWAYS** USE ACTUAL MEASUREMENTS. BOX SIZE AND FINISHED TARP SIZE ARE **NOT** THE SAME.

CONTACT INFORMATION

G011BD-0519

NAME _____

ADDRESS _____

EMAIL _____

CITY _____ STATE _____ ZIP_____

PHONE _____ FAX_____

BOX/TRAILER MAKE _____

BOX DIMENSIONS FOR BELLY DUMPS

A _____ UPPER BOX LENGTH

B _____ UPPER BOX WIDTH

Front _____ Center _____ Rear _____

N _____ TOP RAIL WIDTH

U _____ INSIDE BOX WIDTH

U1 _____ INSIDE PLANK-TO-PLANK WIDTH

X _____ BOX HEIGHT

NOTE: If belly dump is rounded, Cable-Lok™ will NOT fit. Same goes for a box tapered at bottom for brackets for arms. In either case, MUST switch to Shur-Matic™ system instead. For questions, call 800.474.8756.

TARP RAIL STYLE *See Figure 1*

SQUARE SELF CLEANING SQUARE W/ PLANKS*

*Are planks flush with outside of top rail? Y / N *(Circle one)*

TARP COLOR(S) _____

REPLACEMENT TARPS

TYPE OF TARP BEING REPLACED *See Figure 2 for outer hole distance*

CABLE-LOK™ W/CHANNEL

OTHER W/CHANNEL OTHER BRAND _____

OTHER W/RIVETS No. Rivets _____ Outer Hole Distance _____

_____ FINISHED SEWN TARP LENGTH

_____ FINISHED SEWN TARP WIDTH

TYPE OF CAP MEASURED *See Figure 3*

FACE MOUNT TOP MOUNT

CR _____ END CAP RISE

CD _____ END CAP DEPTH Front _____ Rear _____

_____ OUTSIDE END CAP TO END CAP LENGTH

_____ BOX WIDTH

_____ BOX LENGTH

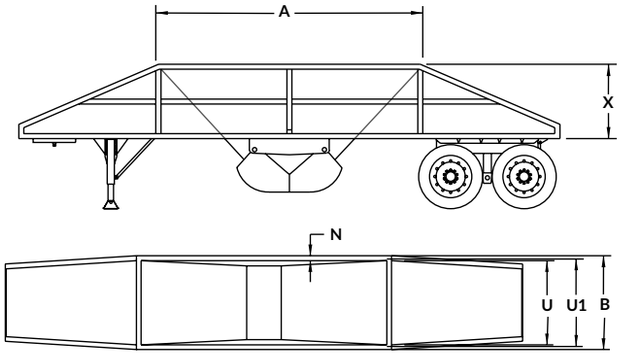

FIGURE 1

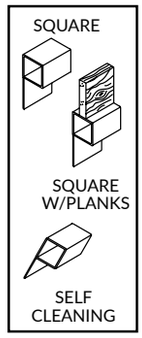

FIGURE 2

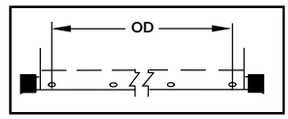

FIGURE 3

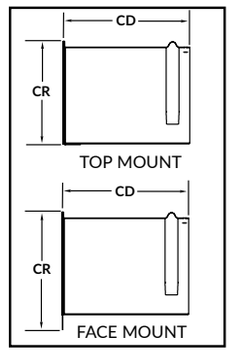

Fax 605.665.0501

Salesperson _____

BOX DETAIL SHEET FOR LIVE-BOTTOM TRAILERS

CORRECT PHYSICAL MEASUREMENTS ARE ESSENTIAL FOR PROPER TARP FIT. PROVIDE ALL REQUESTED INFORMATION OR YOUR ORDER MAY BE DELAYED. **DO NOT** UNIVERSAL BOX SIZES. **ALWAYS** USE ACTUAL MEASUREMENTS. BOX SIZE AND FINISHED TARP SIZE ARE **NOT** THE SAME.

FIGURE 1

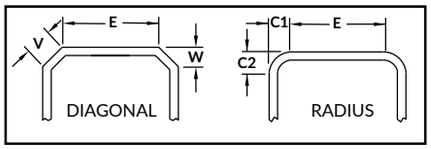

FIGURE 2

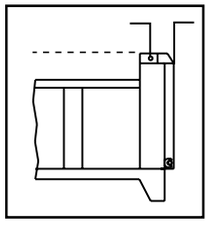

To measure radius corners correctly, place a carpenter's square on the front radius of the trailer. Measure at the point where the radius starts to arch around the front of the trailer.

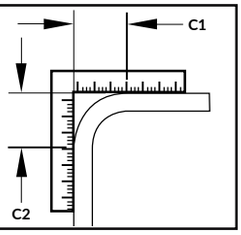

FIGURE 3

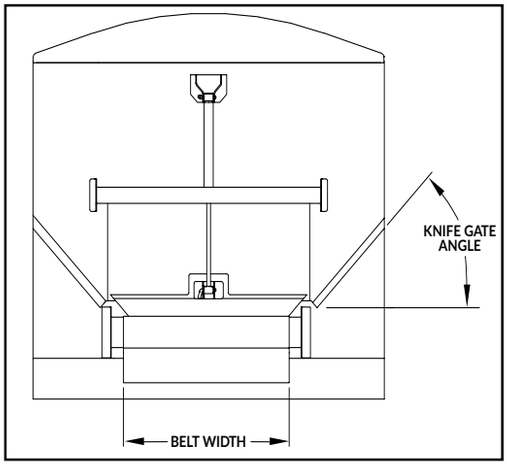

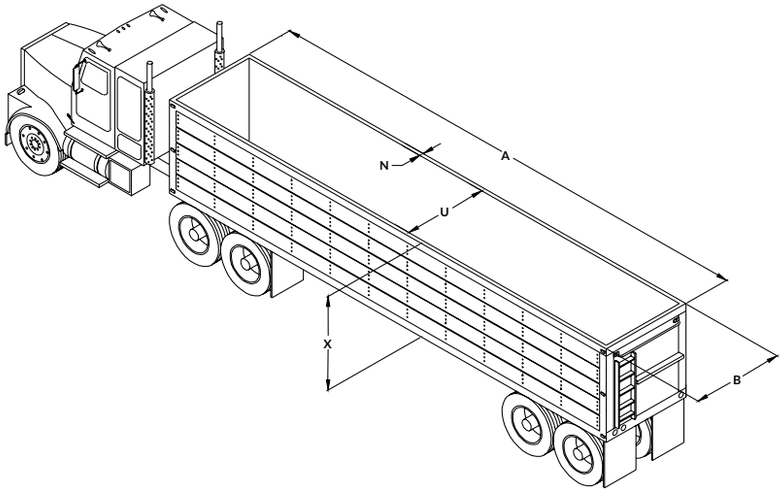

CONTACT INFORMATION

G016BD-1

NAME _____

ADDRESS _____

EMAIL _____

CITY _____ STATE _____ ZIP _____

PHONE _____ FAX _____

BOX/TRAILER MAKE _____

BOX/TRAILER MODEL _____

BOX DIMENSIONS

A _____ UPPER BOX LENGTH

B _____ UPPER BOX WIDTH

Front _____ Center _____ Rear _____

N _____ TOP RAIL WIDTH

U _____ INSIDE BOX WIDTH

X _____ BOX HEIGHT

CORNER CONFIGURATION *See Figure 1*

SQUARE DIAGONAL RADIUS

C _____ OUTSIDE CORNER RADIUS | *For all radius fro*

C1 _____ FRONT RADIUS

C2 _____ SIDE RADIUS

E _____ FLAT ACROSS FRONT

V _____ FLAT ACROSS DIAGONAL

W _____ DIAGONAL DEPTH

REAR DOOR STYLE TOP HINGE SIDE HINGE

REAR HINGE DEPTH *See Figure 2* 0" TO 10" 11" T 17"

MANUAL OVERRIDE KIT" YES NO

*Recommended if hinge depth is > 2".

BACK CAP CHOICE** ALUMINUM FABRIC CAP

**MUST be 20-1/4" deep.

KNIFE GATE *See Figure 3* YES NO

KNIFE GATE ANGLE 45° 57°

BELT WIDTH 36" 42" 48" 60"

TARP WEIGHT 18 OZ. 22 OZ.

TARP COLOR(S) _____

Fax 605.665.0501

Salesperson _____

Shur-Trak II™

ORDER FORM

G001OF-0224

Correct measurements are crucial to getting the right tarp fit. Provide all requested information or your order may be delayed. **DO NOT** use universal box sizes. **ALWAYS** use actual measurements.

CUSTOMER ID# _____ PO# _____ DATE _____ SOURCE CODE _____

NAME _____

ADDRESS _____ EMAIL _____ PHONE _____

CITY _____ STATE _____ ZIP _____

☐ END USER ORDER SHIP TO _____

☐ DEALER ORDER CREDIT CARD INFORMATION _____

☐☐☐☐☐☐☐☐☐☐☐☐☐☐☐☐ EXP. DATE _____ CODE _____

REQUIRED INFORMATION

TARP BODY LENGTH _____

Must answer this.

TARP WIDTH _____

FABRIC TYPE _____

☐ MESH ☐ VINYL

FABRIC COLOR(S) _____

_____

INSIDE BOX WIDTH _____

OUTSIDE BOX WIDTH _____

FRONT SECTION

☐ RAISED ☐ FLAT

BOW COUNT* _____

BOW RISE _____

*The two bows in the Rear Bow Stabilizer are counted as one.

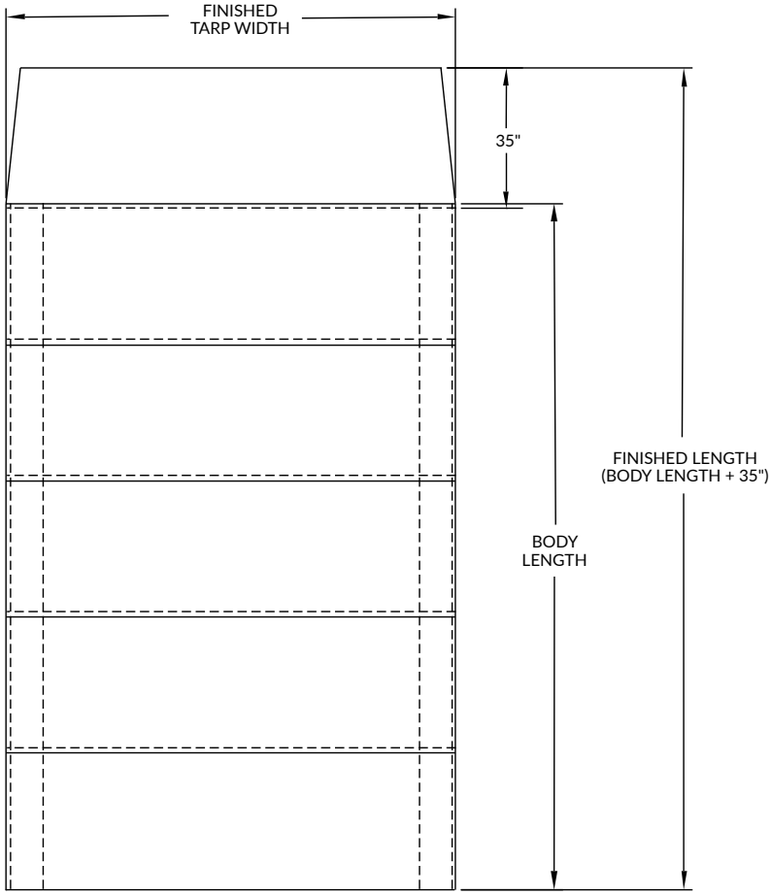

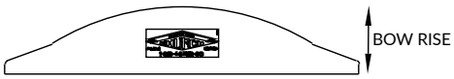

REAR VIEW

SHUR-CO® SALES REP _____ DATE _____

Phone 800.474.8756 • Fax 605.665.0501
www.SHURCO.com

G002OF-0224

Shur-Trak II™ Short Stop™ & Cover-Pro®

ORDER FORM

Correct measurements are crucial to getting the right tarp fit. Provide all requested information or your order may be delayed. **DO NOT** use universal box sizes. **ALWAYS** use actual measurements.

CUSTOMER ID# _____ PO# _____ DATE _____ SOURCE CODE _____

NAME _____

ADDRESS _____ EMAIL _____ PHONE _____

CITY _____ STATE _____ ZIP _____

☐ END USER ORDER SHIP TO _____

☐ DEALER ORDER CREDIT CARD INFORMATION _____

☐☐☐☐☐☐☐☐☐☐☐☐☐☐☐☐ EXP. DATE _____ CODE _____

REQUIRED INFORMATION

TARP BODY LENGTH _____

Must answer this.

TARP WIDTH _____

FABRIC TYPE _____

☐ MESH ☐ VINYL

FABRIC COLOR(S) _____

_____

INSIDE BOX WIDTH _____

OUTSIDE BOX WIDTH _____

BOW SPACING

☐ 30" COVER-PRO®

☐ 36" SHUR-TRAK™ SHORTSTOP™ & COVER-PRO®

BOW COUNT* _____

BOW RISE _____

TARP FASTENER

☐ POCKET ☐ BOLT-ON ☐ VELCRO LOOPS

*The two bows in the Rear Bow Stabilizer are counted as one.

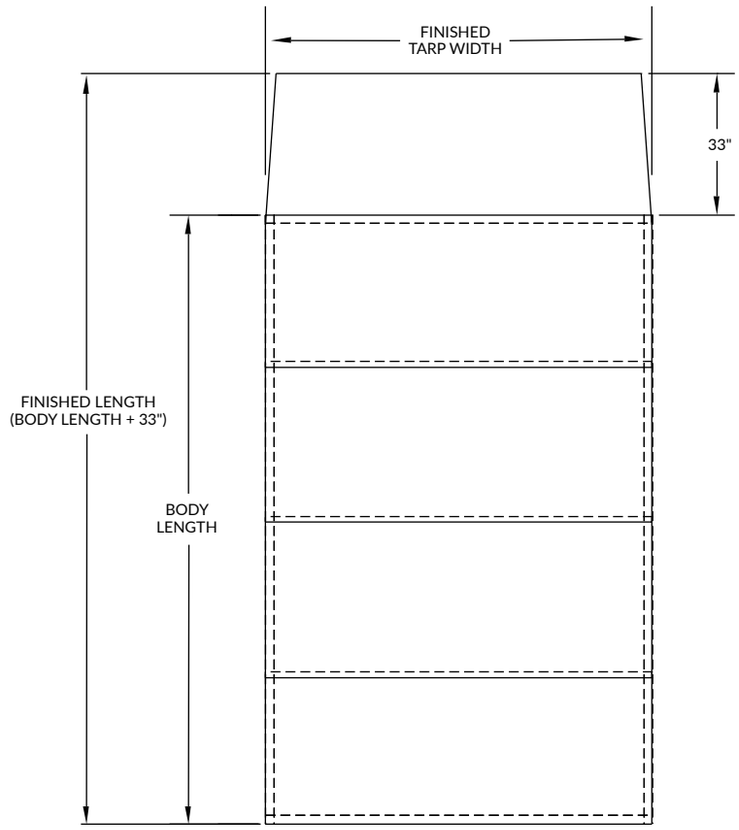

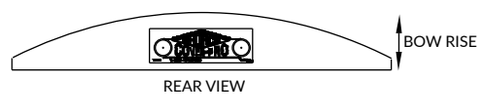

SHUR-CO® SALES REP _____ DATE _____

Phone 800.474.8756 • Fax 605.665.0501
www.SHURCO.com

G004OF-0224

SMARTrailer™ Accessories for Grain Trailers

ORDER FORM

Correct measurements are crucial to getting the right tarp fit. Provide all requested information or your order may be delayed. **DO NOT** use universal box sizes. **ALWAYS** use actual measurements.

CUSTOMER ID# _____ PO# _____ DATE _____ SOURCE CODE _____

NAME _____

ADDRESS _____ EMAIL _____ PHONE _____

CITY _____ STATE _____ ZIP _____

☐ END USER ORDER SHIP TO _____

☐ DEALER ORDER

WHICH SYSTEMS DO YOU CURRENTLY HAVE INSTALLED?

ELECTRIC TARP SYSTEM

☐ 3500 SERIES ☐ 4500 SERIES ☐ Other _____

OPERATION TYPE

☐ ROCKER ☐ SMARTRANSMITTER®

☐ SMART1+ ☐ SMART3™

☐ SMART2™ ☐ Vers. 8 ☐ Vers. 9 ☐ Other _____

☐ SHURLINK PRO™ ☐ SHURLINK EZR™ ☐ SHURLINK™ APP

DOES SYSTEM USE SMARTwire™? ☐ YES ☐ NO

ELECTRIC TRAP SYSTEM

☐ PROTRAP® ☐ AUTOTRAP™ ☐ MAXXTRAP™

OPERATION TYPE

☐ ROCKER ☐ SMARTRANSMITTER®

☐ SMART1+ ☐ SMART3™

☐ SMART2™ ☐ Vers. 8 ☐ Vers. 9 ☐ Other _____

☐ SHURLINK PRO™ ☐ SHURLINK EZR™ ☐ SHURLINK™ APP

DOES SYSTEM USE SMARTwire™? ☐ YES ☐ NO

LIKE TO ADD?

☐ 4500 SERIES HD

☐ PROTRAP® / AUTOTRAP™

☐ 4500 SERIES HD / PROTRAP®

☐ 4500 SERIES HD / AUTOTRAP™

4500 SERIES HD GRAIN TRAILER

TRAILER MAKE

☐ WILSON ☐ EBY

☐ CORNHUSKER ☐ TIMPTE

☐ WESTERN ☐ NEVILLE*

☐ JET CO.* ☐ MERRITT*

☐ MAURER ☐ WHEELER*

☐ STOUGHTON ☐ HART MFG.

☐ Other _____

YEAR _____

* Backer plate recommended.

FRONT OF TRAILER

☐ VERTICAL ☐ SLOPED

ROLL DIRECTION OF TARP

☐ STANDARD ☐ REVERSE ROLL

REAR DOOR STYLE

☐ STANDARD ☐ TOP HING

☐ SIDE HINGE

DEPTH: LADDER _____

CATWALK _____

REAR DOOR STYLE

☐ U.S. DRIVER ☐ U.S. PASSENGER

☐ CENTER ☐ OFF-CENTER

RIB/RIVET SPACING _____

OPERATION TYPE

☐ ROCKER SWITCH*

*For 4500HD along, no ProTrap®/AutoTrap™ combos.

☐ SHURLINK PRO™ REMOTE

☐ SHURLINK EZR™ REMOTE

_____

THE FOLLOWING **MUST** BE ORDERED SEPARATELY.

CRANK RETAINERS - QTY 2

(Used to store the crank under the king pin.)

☐ YES ☐ NO

U-CLAMPS & SCREWS

Existing Shur-Lok® will need new U-clamps/screws to reattach the tarp to the roll tube.

☐ U-CLAMPS ☐ SCREWS

PROTRAP® / AUTOTRAP™

TRAILER MAKE

☐ WILSON ☐ EBY

☐ CORNHUSKER ☐ TIMPTE

☐ WESTERN ☐ NEVILLE

☐ JET CO.* ☐ MERRITT

☐ MAURER ☐ WHEELER

☐ STOUGHTON ☐ HART MFG.

☐ Other _____

YEAR _____

* Special bracketry may be required.

CURRENTLY HAVE 3500/4500 WITH ROCKET SWITCH? WANT TO CONVERT TO WIRELESS?

☐ YES ☐ NO

MOTOR INSTALL LOCATION

☐ U.S. DRIVER ☐ U.S. PASSENGER

TRAP STYLE

☐ RACK & PINION ☐ STRAP-TRAP

SHAFT DIAMETER

☐ 1" ☐ 7/8" ☐ 3/4"

☐ Other _____

KNOCK RAIL

☐ YES ☐ NO

FRONT HOPPER

☐ DIRECT DRIVE - CLOCKWISE**

☐ DIRECT DRIVE - COUNTERCLOCKWISE**

REAR HOPPER

☐ DIRECT DRIVE - CLOCKWISE**

☐ DIRECT DRIVE - COUNTERCLOCKWISE**

** Direction is from the view of where motor will be mounted.

Train Electric Systems Available in Wireless ONLY.

NOTE: MUST go through special quote and SOP to get pricing, plus lead wire kit and coiled wire plug will be added to price.

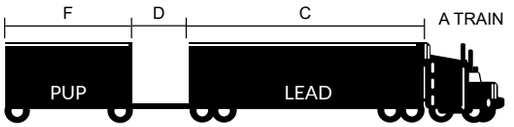

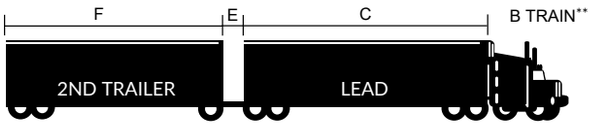

**Second trailer can be pulled independently by a tractor.

SHAFT DIAMETER _____

LEAD/PUP TRAINS (Refer to above illustration.)

C _____ LEAD TRAIN LENGTH

D _____ TONGUE LENGTH ON PUP (A TRAIN)

E _____ DISTANCE BETWEEN LEAD & TRAILER (B TRAIN)

F _____ PULL / PUP TRAIN LENGTH

SOLAR ☐ YES ☐ NO

PULL/PUP ☐ YES ☐ NO

LEAD ☐ YES ☐ NO

Phone 800.474.8756 • Fax 605.665.0501
www.SHURCO.com

G005OF-0224

SMARTrailer™ Accessories for End Dumps & Live Bottoms

ORDER FORM

Correct measurements are crucial to getting the right tarp fit. Provide all requested information or your order may be delayed. **DO NOT** use universal box sizes. **ALWAYS** use actual measurements

CUSTOMER ID# _____ PO# _____ DATE _____ SOURCE CODE _____

NAME _____

ADDRESS _____ EMAIL _____ PHONE _____

CITY _____ STATE _____ ZIP _____

☐ END USER ORDER SHIP TO _____

☐ DEALER ORDER

4500 HD FOR END DUMP

EQUIPPED WITH GATE FLEX™ OPTION TO ACCOMMODATE END DUMP DOORS.

MAKE _____

YEAR _____

FRONT OF TRAILER

☐ VERTICAL ☐ SLOPED

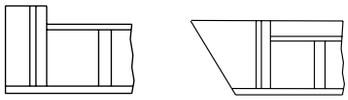

REAR OF TRAILER

☐ TOP HINGE

(Must be level with or below the top rail.)

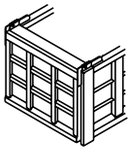

REAR HINGE DEPTH

☐ 0" - 10"

☐ >11" - 17"

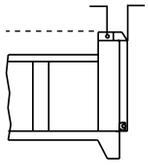

MANUAL OVERRIDE*

☐ YES ☐ NO

*Recommended for hinge depth greater than 2".

QTY OF ELECTRIC WIRE

☐ 75' ☐ 100'

OPERATION TYPE

☐ ROCKER SWITCH

☐ SHURLINK PRO™ REMOTE

☐ SHURLINK EZR™ REMOTE

ADDITIONAL ITEMS TO ASK ABOUT

Are existing roll tubes in good shape? Need easy-off 6" offset tarp stops? Replacement U-clamps and screws?

Will fit these trailer styles:

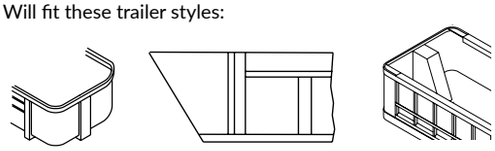

These styles need modification in order to operate properly.

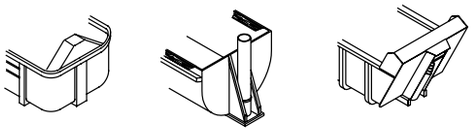

4500 HD FOR LIVE BOTTOM

MAKE _____

YEAR _____

FRONT OF TRAILER

☐ VERTICAL ☐ SLOPED

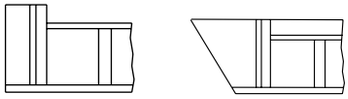

REAR OF TRAILER _____

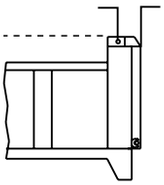

MANUAL OVERRIDE*

☐ YES ☐ NO

*Recommended for hinge depth greater than 2".

RIB SPACING

FRONT _____ REAR _____**

**Measure from center of rib to center of rib.

CATWALK LENGTH _____

LOCATION OF LADDER

☐ U.S. DRIVER ☐ U.S. PASSENGER

☐ CENTER ☐ OFF-CENTER

TRAILER MODEL

☐ 2006 OR NEWER

☐ 2005 OR OLDER

BACK CAP CHOICE***

☐ ALUMINUM ☐ FABRIC CAP

*Recommended for hinge depth greater than 2".

OPERATION TYPE

☐ ROCKER SWITCH

☐ SHURLINK PRO™ REMOTE

☐ SHURLINK EZR™ REMOTE

ADDITIONAL ITEMS TO ASK ABOUT

Are existing roll tubes in good shape? Need easy-off 6" offset tarp stops****? Replacement U-clamps and screws?

****Required for Top Hing Rear Door Kits.

KNIFE GATE

☐ YES ☐ NO

ANGLE

☐ 45° ☐ 57°

KNIFE GATE

☐ 36" ☐ 42" ☐ 48" ☐ 60"

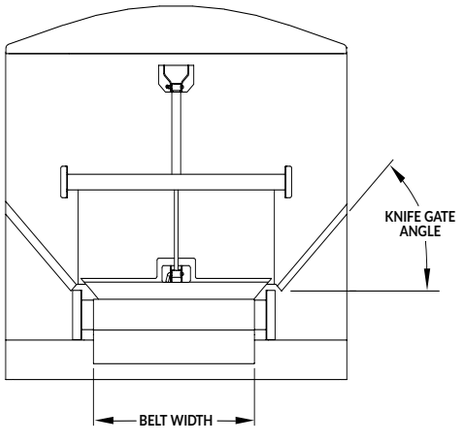

SHUR-CO® SALES REP _____ DATE _____

Phone 800.474.8756 • Fax 605.665.0501
www.SHURCO.com

WARRANTIES

TERMS AND CONDITIONS

PATENTS

SHURCO™ SALES TEAM

Products and pricing are subject to change without notice. Components other than standard may require a non-refundable engineering fee.

Marks are owned by Shur-Co, LLC or their respective owners. © 2026 Shur-Co, LLC. All rights reserved.

SHURCO.COM | 800-474-8756

Marks are owned by Shur-Co, LLC or their respective owners. © 2025 Shur-Co, LLC. All rights reserved.
SC010CAT_1225